DSR-PD150/PD150P

RMT-811

SERVICE MANUAL

Self Diagnosis Supported model

Ver 1.9 2004. 07

DVCAM™

Mini DV Digital Video Cassette

InfoLITHIUM™ L SERIES

Cassette Memory

MEMORY STICK

US Model
Canadian Model
DSR-PD150
AEP Model
Chinese Model
DSR-PD150P

Photo : DSR-PD150

C MECHANISM

NTSC model : DSR-PD150
PAL model : DSR-PD150P

SPECIFICATIONS

Video camera recorder

System

Video recording system
2 rotary heads
Helical scanning system
Audio recording system
Rotary heads, PCM system
Quantization: Fs32 kHz (12 bits, channels 1/2, channels 3/4), Fs48 kHz (16 bits, stereo)
Video signal
PD150: NTSC color, EIA standards
PD150P: PAL colour, CCIR standards
Usable cassette
Mini DVCAM cassette with the DVCAM mark printed
Mini DV cassette with the Mini DV mark printed
Tape speed
DVCAM format:
Approx. 28.218 mm/s
DV format SP mode: Approx. 18.812 mm/s
Recording/playback time (using cassette PDVM-40ME)
DVCAM format: 40 min
DV format SP mode: 1 h
Fast-forward/rewind time (using cassette PDVM-40ME)
Approx. 2 min and 30 s
Viewfinder
Electric viewfinder (B&W)
Image device
1/3 type CCD (3 Charge Coupled Device)
PD150: Approx. 380 000 pixels
(Effective: Approx. 340 000 pixels)
PD150P: Approx. 450 000 pixels
(Effective: Approx. 400 000 pixels)
Lens
Combined power zoom lens
Filter diameter 58 mm (2 3/8 in)
12× (Optical), 48× (Digital)
F1.6 - 2.4
Focal length
6 - 72 mm (1/4 - 2 7/8 in)
When converted to a 35 mm still camera
43.2 - 518.4 mm (1 3/4 - 20 1/2 in)
Color temperature
Auto, Indoor (3200K), Outdoor (5800K),
Minimum illumination
2 lux (F 1.6)

Input/Output connectors

S VIDEO input/output
Input/output auto switch
4-pin mini DIN
Luminance signal: 1 Vp-p, 75 ohms, unbalanced
Chrominance signal:
0.286 Vp-p (PD150),
0.3 Vp-p (PD150P)
75 ohms, unbalanced
VIDEO input/output
Input/output auto switch
RCA pin-jack, 1 Vp-p, 75 ohms, unbalanced, sync negative
AUDIO CH1/CH2 input/output
Input/output auto switch
RCA pin-jack, 327 mV, (at output impedance more than 47 kilohms)
Output impedance with less than 2.2 kilohms
Input impedance more than 47 kilohms
Headphones jack
Stereo minijack (ø 3.5 mm)
LANC control jack
Stereo mini-minijack (ø 2.5 mm)
INPUT1/INPUT2 connectors
XLR 3-pin, female, –60 dBu, 3 kilohms, +4 dBu, 10 kilohms
(0 dBu = 0.775 Vrms)
DV input/output
4-pin connector
Speaker
Dynamic speaker (ø 20 mm)

LCD screen

Picture
2.5 type measured diagonally
49.9 × 37.3 mm (2 × 1 1/2 in)
Total dot number
200 640 (880 × 228)

General

Peak inrush current (PD150P)
(1) Hot switching inrush current, measured in accordance with European standard EN55103-1:
6.3 A (230 V)
Power requirements
7.2 V (battery pack)
8.4 V (AC power adaptor)
Average power consumption
(when using the battery pack)
During camera recording using LCD
5.4 W
Viewfinder
4.7 W
Operating temperature
0 °C to 40 °C (32 °F to 104 °F)
Storage temperature
–20 °C to +60 °C (–4 °F to +140 °F)
Dimensions (approx.)
128 × 180 × 405 mm (5 1/8 × 7 1/8 × 16 in) (w/h/d)
Mass (approx.)
1.6 kg (3 lb 8 oz)
main unit only
1.8 kg (3 lb 15 oz)
including the battery pack, NP-F330, cassette PDVM-40ME, microphone and hood cap
Supplied accessories
See page 2.

— Continued on next page —

DVCAM™ DIGITAL CAMCORDER

SONY®

AC power adaptor

Power requirements
100 - 240 V AC, 50/60 Hz
Power consumption
23 W
Output voltage
DC OUT: 8.4 V, 1.5 A in the operating mode
Operating temperature
0 °C to 40 °C (32 °F to 104 °F)
Storage temperature
–20 °C to +60 °C (–4 °F to +140 °F)
Dimensions (approx.)
125 × 39 × 62 mm
(5 × 1 9/16 × 2 1/2 in) (w/h/d)
excluding projecting parts
Mass (approx.)
280 g (9.8 oz)
excluding power cord
Cord length (approx.)
Power cord: 2 m (6.6 feet)(PD150)
Mains lead: 2 m (6.6 feet)(PD150P)
Connecting cord: 1.6 m (5.2 feet)

Battery pack

Output voltage
DC 7.2 V
Capacity
5.0 Wh
Dimensions (approx.)
38.4 × 20.6 × 70.8 mm (1 9/16 × 13/16 × 2 7/8 in) (w/h/d)
Mass (approx.)
70 g (2.5 oz)
Type
Lithium ion

"Memory Stick"

Memory
Flash memory
4MB: MSA-4A
Operating voltage
2.7 V -3.6 V
Power consumption
Approx. 45 mA in the operating mode
Approx. 130 µA in the standby mode
Dimensions (approx.)
50 × 2.8 × 21.5 mm
(2 × 1/8 × 7/8 in) (w/h/d)
Mass (approx.)
4 g (0.14 oz)

Design and specifications are subject to change without notice.

• SUPPLIED ACCESSORIES

Check that the following accessories are supplied with your camcorder.

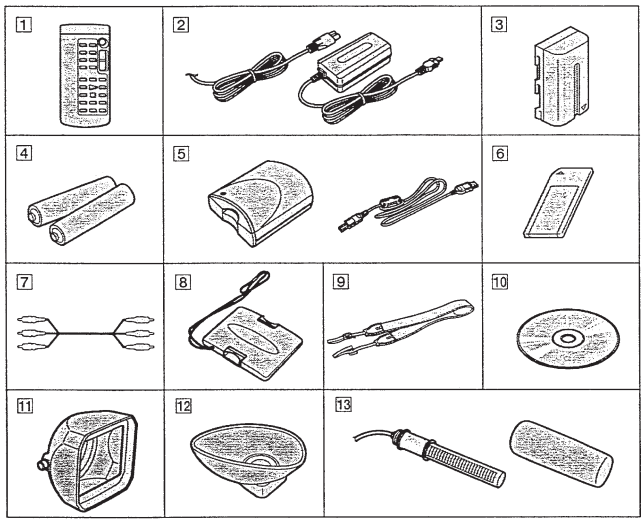

1 **RMT-811 Wireless Remote Commander** (1)
2 **AC-L10A/L10B/L10C AC power adaptor** (1), **Power cord** (1)(DSR-PD150), **Mains lead** (1)(DSR-PD150P)
3 **NP-F330 battery pack** (1)
4 **Size AA (R6) battery for Remote Commander** (2)
5 **Memory Stick Reader/Writer** (1), **USB cable** (1)
6 **"Memory Stick"** (1)
7 **A/V connecting cable** (1)
8 **Hood cap** (1)
9 **Shoulder strap** (1)
10 **Application software: PictureGear 4.1Lite (CD ROM)** (1)
11 **Lens hood** (1)
12 **Eyecup (large)** (1)
13 **Microphone** (1), **Wind screen** (1)

SAFETY-RELATED COMPONENT WARNING!!

COMPONENTS IDENTIFIED BY MARK ⚠ OR DOTTED LINE WITH MARK ⚠ ON THE SCHEMATIC DIAGRAMS AND IN THE PARTS LIST ARE CRITICAL TO SAFE OPERATION. REPLACE THESE COMPONENTS WITH SONY PARTS WHOSE PART NUMBERS APPEAR AS SHOWN IN THIS MANUAL OR IN SUPPLEMENTS PUBLISHED BY SONY.

ATTENTION AU COMPOSANT AYANT RAPPORT À LA SÉCURITÉ!

LES COMPOSANTS IDENTIFÉS PAR UNE MARQUE ⚠ SUR LES DIAGRAMMES SCHÉMATIQUES ET LA LISTE DES PIÈCES SONT CRITIQUES POUR LA SÉCURITÉ DE FONCTIONNEMENT. NE REMPLACER CES COMPOSANTS QUE PAR DES PIÈSES SONY DONT LES NUMÉROS SONT DONNÉS DANS CE MANUEL OU DANS LES SUPPÉMENTS PUBLIÉS PAR SONY.

SAFETY CHECK-OUT

After correcting the original service problem, perform the following safety checks before releasing the set to the customer.

1. Check the area of your repair for unsoldered or poorly-soldered connections. Check the entire board surface for solder splashes and bridges.
2. Check the interboard wiring to ensure that no wires are "pinched" or contact high-wattage resistors.
3. Look for unauthorized replacement parts, particularly transistors, that were installed during a previous repair. Point them out to the customer and recommend their replacement.
4. Look for parts which, through functioning, show obvious signs of deterioration. Point them out to the customer and recommend their replacement.
5. Check the B+ voltage to see it is at the values specified.
6. Flexible Circuit Board Repairing
   - Keep the temperature of the soldering iron around 270˚C during repairing.
   - Do not touch the soldering iron on the same conductor of the circuit board (within 3 times).
   - Be careful not to apply force on the conductor when soldering or unsoldering.

TABLE OF CONTENTS

SERVICE NOTE

1. POWER SUPPLY DURING REPAIRS 7
2. TO TAKE OUT A CASSETTE WHEN NOT EJECT (FORCE EJECT) 7

SELF-DIAGNOSIS FUNCTION

1. SELF-DIAGNOSIS FUNCTION 8
2. SELF-DIAGNOSIS DISPLAY 8
3. SERVICE MODE DISPLAY 8
3-1. Display Method 8
3-2. Switching of Backup No. 8
3-3. End of Display 8
4. SELF-DIAGNOSIS CODE TABLE 9

1. GENERAL

Quick Start Guide 1-1
Getting started 1-1
Using this manual 1-1
Checking supplied accessories 1-2
Step 1 Inserting the microphone 1-2
Step 2 Preparing the power supply 1-2
Step 3 Inserting a cassette 1-3
Recording –Basics 1-4
Recording a picture 1-4
Shooting backlit subjects (BACK LIGHT) 1-5
Spot light 1-6
Checking the recording – END SEARCH/ EDIT SEARCH/Rec Review 1-6
Playback –Basics 1-6
Playing back a tape 1-6
Viewing the recording on TV 1-7
Advanced Recording Operations 1-8
Recording a still image on a tape –Tape Photo recording 1-8
Shooting with all the pixels –PROG. SCAN 1-8
Using the guide frame 1-8
Using the wide mode 1-9
Using the fader function 1-9
Using special effects –Digital effect 1-9
Shooting with manual adjustment 1-10
Adjusting the white balance 1-12
Adjusting recording level manually –Sound recording level 1-13
Connecting an optional external microphone 1-13
Presetting the adjustment for picture quality –Custom preset 1-14
Focusing manually 1-14
Interval recording 1-14
Frame by frame recording –Cut recording 1-15
Superimposing the date and time on a picture 1-15
Marking an Index 1-15
Advanced Playback Operations 1-16
Searching for a recording by index –Index search 1-16
Searching the boundaries of recorded tape by title –Title search 1-16
Searching a recording by date –Date search 1-16
Searching for a photo –Photo search/Photo scan 1-17
Playing back a tape with digital effects 1-17
Editing 1-18
Dubbing a tape 1-18
Dubbing only desired scenes –Digital program editing 1-18
Using with analog video unit and a PC – Signal convert function 1-20
Recording video or TV programs 1-20
Audio dubbing 1-21
Setting time values 1-22
Superimposing a title 1-23
Making your own titles 1-24
Labeling a cassette 1-25
Erasing the cassette memory data 1-25
Customizing Your Camcorder 1-26
Changing the menu settings 1-26
Resetting the date and time 1-27
“Memory Stick” Operations 1-28
Using a “Memory Stick” –introduction 1-28
Recording still images on a “Memory Stick” –Memory Photo recording 1-29
Superimposing a still picture in a “Memory Stick” on a moving picture –MEMORY MIX 1-30
Recording an image from a tape as a still image 1-31
Copying still images from a tape –Photo save 1-31
Viewing a still picture –Memory photo playback 1-32
Copying an image recorded on a “Memory Stick” to tapes 1-33
Playing back images continuously –SLIDE SHOW 1-33
Preventing accidental erasure –Image protection 1-33
Deleting images 1-34
Writing a print mark –Print mark 1-34
Additional Information 1-35
Compatibility of DVCAM and DV formats 1-35
Usable cassettes 1-36
About i.LINK 1-37
Troubleshooting 1-38
Self-diagnosis display 1-38
Warning indicators and messages 1-38
Using your camcorder abroad 1-39
Maintenance information and precautions 1-39
Quick Reference 1-40
Identifying the parts and controls 1-40
Quick Function Guide 1-42
Auto Logo Insert for Copyright Protection 1-43
Introduction –Auto Logo Insert 1-43
Preparing a logo file 1-43
Registering your password 1-44
Registering a still image to be used as a logo 1-44
Deactivating the auto logo insert function 1-44
Changing or resetting the setup 1-45
Precautions concerning the auto logo insert function 1-45

2. DISASSEMBLY

2-1. LCD SECTION (HL-011, PD-126 BOARDS, INVERTER TRANSFORMER UNIT) 2-2
2-2. EVF SECTION (LB-065D BOARD) 2-3
2-3. UPPER HANDLE BLOCK ASSEMBLY 2-4
2-4. FK-076, MA-386D BOARDS 2-4
2-5. XD-001, XS-001, XM-001 BOARDS 2-5
2-6. CABINET (L) BLOCK ASSEMBLY, MECHANISM DECK, VC-242D, DD-138D, JK-190 BOARDS (FOR FORCE EJECT OF CASSETTE AND VTR SECTION CHECK) 2-6
2-7. CABINET (R) BLOCK ASSEMBLY 2-8
2-8. CABINET BOTTOM (D) ASSEMBLY 2-8
2-9. BATTERY PANEL BLOCK ASSEMBLY (MK-014, KP-010, MS-049 BOARDS) 2-9
2-10. EVF BLOCK ASSEMBLY 2-10
2-11. LA-026, DD-138D, VC-242D, JK-190 BOARDS, MECHANISM DECK 2-11
2-12. LENS BLOCK ASSEMBLY, CENTER FRAME ASSEMBLY 2-12
2-13. CD-254, SE-108 BOARDS, ZOOM LENS ASSEMBLY 2-13
2-14. CONTROL SWITCH BLOCK (PS-4980), CONTROL SWITCH BLOCK (CF-4980) 2-14
2-15. CK-093 BOARD 2-15
2-16. CONTROL SWITCH BLOCK (ED-4980), HINGE ASSEMBLY 2-15
2-17. CIRCUIT BOARDS LOCATION 2-15
2-18. FLEXIBLE BOARDS LOCATION 2-16

3. BLOCK DIAGRAMS

3-1. OVERALL BLOCK DIAGRAM (1/4) ····· 3-1
3-2. OVERALL BLOCK DIAGRAM (2/4) ····· 3-3
3-3. OVERALL BLOCK DIAGRAM (3/4) ····· 3-5
3-4. OVERALL BLOCK DIAGRAM (4/4) ····· 3-7
3-5. POWER BLOCK DIAGRAM (1/3) ····· 3-9
3-6. POWER BLOCK DIAGRAM (2/3) ····· 3-11
3-7. POWER BLOCK DIAGRAM (3/3) ····· 3-13

4. PRINTED WIRING BOARDS AND SCHEMATIC DIAGRAMS

4-1. FRAME SCHEMATIC DIAGRAM (1/3) ····· 4-1
FRAME SCHEMATIC DIAGRAM (2/3) ····· 4-3
FRAME SCHEMATIC DIAGRAM (3/3) ····· 4-5
4-2. PRINTED WIRING BOARDS AND SCHEMATIC DIAGRAMS ····· 4-8
• CD-254 (CCD IMAGER) SCHEMATIC DIAGRAM ····· 4-9
• CD-254 (CCD IMAGER) PRINTED WIRING BOARD ····· 4-11
• VC-242D (S/H AGC, TG)(1/18) SCHEMATIC DIAGRAM ····· 4-13
• VC-242D (CAMERA SIGNAL PROCESS)(2/18) SCHEMATIC DIAGRAM ····· 4-15
• VC-242D (MS I/F)(3/18) SCHEMATIC DIAGRAM ····· 4-17
• VC-242D (RS 232C I/F, STILL CONTROL)(4/18) SCHEMATIC DIAGRAM ····· 4-19
• VC-242D (MS DRIVE)(5/18) SCHEMATIC DIAGRAM ····· 4-21
• VC-242D (DV SIGNAL PROCESS)(6/18) SCHEMATIC DIAGRAM ····· 4-23
• VC-242D (DV INTERFACE)(7/18) SCHEMATIC DIAGRAM ····· 4-25
• VC-242D (REC/PB AMP)(8/18) SCHEMATIC DIAGRAM ····· 4-27
• VC-242D (LINE IN/OUT)(9/18) SCHEMATIC DIAGRAM ····· 4-29
• VC-242D (LINE A/D)(10/18) SCHEMATIC DIAGRAM ····· 4-31
• VC-242D (RGB DRIVE/TG)(11/18) SCHEMATIC DIAGRAM ····· 4-33
• VC-242D (CAMERA CONTROL)(12/18) SCHEMATIC DIAGRAM ····· 4-35
• VC-242D (MECHANISM CONTROL)(13/18) SCHEMATIC DIAGRAM ····· 4-37
• VC-242D (DRUM/CAPSTAN MOTOR DRIVE)(14/18) SCHEMATIC DIAGRAM ····· 4-39
• FP-594 (LOADING MOTOR, S/T REEL SENSOR) PRINTED WIRING BOARD ····· 4-41
• VC-242D (HI CONTROL)(15/18) SCHEMATIC DIAGRAM ····· 4-43
• VC-242D (AU LINE A/D, D/A)(16/18) SCHEMATIC DIAGRAM ····· 4-45
• VC-242D (LINE AMP)(17/18) SCHEMATIC DIAGRAM ····· 4-47
• VC-242D (CONNECTOR)(18/18) SCHEMATIC DIAGRAM ····· 4-49
• VC-242D (S/H AGC, TG, CAMERA SIGNAL PROCESS, MS I/F, RS232C I/F, STILL CONTROL, MS DRIVE, DV SIGNAL PROCESS, REC/PB AMP, LINE IN/OUT, LINE A/D, RGB DRIVE/TG, CAMERA CONTROL, MECHANISM CONTROL, DRUM/CAPSTAN MOTOR DRIVE, HI CONTROL, AU LINE A/D, D/A, LINE AMP) PRINTED WIRING BOARD ····· 4-51
• JK-190 (JACK BOARD) PRINTED WIRING BOARD ····· 4-55
• JK-190 (JACK BOARD) SCHEMATIC DIAGRAM ····· 4-57
• CK-093 (KEY IN) PRINTED WIRING BOARD ····· 4-59
• CK-093 (KEY IN) SCHEMATIC DIAGRAM ····· 4-61
• PD-126 (RGB DRIVE/TG) PRINTED WIRING BOARD ····· 4-63
• PD-126 (RGB DRIVE/TG) SCHEMATIC DIAGRAM ····· 4-65
• LA-026 (ZOOM/FOCUS DRIVE, VAP DRIVE, KEY IN/CONNECTOR) PRINTED WIRING BOARD ····· 4-67
• LA-026 (ZOOM/FOCUS DRIVE)(1/3) SCHEMATIC DIAGRAM ····· 4-69
• LA-026 (VAP DRIVE)(2/3) SCHEMATIC DIAGRAM ····· 4-71
• LA-026 (KEY IN/CONNECTOR)(3/3) SCHEMATIC DIAGRAM ····· 4-73
• SE-108 (VAP SENSOR) PRINTED WIRING BOARD ····· 4-75
• MS-049 (MS CONNECTOR) PRINTED WIRING BOARD ····· 4-77
• KP-010 (SELECT DIAL) PRINTED WIRING BOARD ····· 4-79
• MK-014 (CONTROL KEY) PRINTED WIRING BOARD ····· 4-79
• KP-010 (LCD DRIVE), MK-014 (CONTROL KEY), MS-049 (MS CONNECTOR) SCHEMATIC DIAGRAM ····· 4-81
• FK-076 (CONTROL SWITCH) PRINTED WIRING BOARD ····· 4-83
• FK-076 (CONTROL SWITCH) SCHEMATIC DIAGRAM ····· 4-85
• XD-001 (DC/DC CONVERTER SIRCS), XS-001 (MIC SELECT) PRINTED WIRING BOARDS ····· 4-87
• XD-001 (DC/DC CONVERTER SIRCS), XS-001 (MIC SELECT) SCHEMATIC DIAGRAM ····· 4-89
• XM-001 (MIC AMP) PRINTED WIRING BOARD ····· 4-91
• XM-001 (MIC AMP) SCHEMATIC DIAGRAM ····· 4-93
• LB-065D (BACK LIGHT) PRINTED WIRING BOARD ····· 4-96
• LB-065D (BACK LIGHT) SCHEMATIC DIAGRAM ····· 4-97
• HL-011 (LCD DRIVE) PRINTED WIRING BOARD ····· 4-99
• HL-011 (LCD DRIVE) SCHEMATIC DIAGRAM ····· 4-101
• MA-386D (AUDIO AMP) PRINTED WIRING BOARD ····· 4-103
• MA-386D (AUDIO AMP) SCHEMATIC DIAGRAM ····· 4-105
• DD-138D (DC/DC CONVERTER, DC REGURATOR) PRINTED WIRING BOARD ····· 4-107
• DD-138D (DC/DC CONVERTER)(1/2) SCHEMATIC DIAGRAM ····· 4-109
• DD-138D (DC REGURATOR)(2/2) SCHEMATIC DIAGRAM ····· 4-111
4-3. WAVEFORMS ····· 4-113
4-4. MOUNTED PARTS LOCATION ····· 4-118

5 ADJUSTMENTS

1. Before starting adjustment ····· 5-1
1-1. Adjusting items when replacing main parts and boards. · 5-2
5-1. CAMERA SECTION ADJUSTMENT ····· 5-4
1-1. PREPARATIONS BEFORE ADJUSTMENT (CAMERA SECTION) ····· 5-4
1-1-1. List of Service Tools ····· 5-4
1-1-2. Preparations ····· 5-6
1-1-3. Precaution ····· 5-8
1. Setting the Switch ····· 5-8
2. Order of Adjustments ····· 5-8
3. Subjects ····· 5-9
1-2. INITIALIZATION OF A, B, C, D, E, F, 8 PAGE DATA ··· 5-9
1-2-1. INITIALIZATION OF A, C, D, 8 PAGE DATA ····· 5-9
1. Initializing the C, D, 8 Page Data ····· 5-9
2. Modification of C, D, 8 Page Data ····· 5-9
3. C Page Table ····· 5-9
4. D Page Table ····· 5-11
5. 8 Page Table ····· 5-12
6. Initializing the A Page Data ····· 5-12
1-2-2. INITIALIZATION OF B PAGE DATA ····· 5-13
1. Initializing the B Page Data ····· 5-13
2. Modification of B Page Data ····· 5-13
3. B Page Table ····· 5-13
1-2-3. INITIALIZATION OF E, F PAGE DATA ····· 5-14
1. Initializing the E, F Page Data ····· 5-14
2. Modification of E, F Page Data ····· 5-14
3. Modification of E Page Data ····· 5-14
4. F Page Table ····· 5-15
5. E Page Table ····· 5-16
1-3. CAMERA SYSTEM ADJUSTMENTS ····· 5-17
1. 27MHz Origin Oscillation Adjustment (VC-242D board) ····· 5-17
2. Zoom Key Center Adjustment ····· 5-17
3. HALL Adjustment ····· 5-18
4. Offset Adjustment ····· 5-18
5. Flange Back Adjustment (Using Minipattern Box) ····· 5-19
6. Flange Back Adjustment (Using Flange Back Adjustment Chart and Subject More Than 500m Away) ····· 5-20
6-1. Flange Back Adjustment (1) ····· 5-20
6-2. Flange Back Adjustment (2) ····· 5-20
7. Flange Back Check ····· 5-21
8. Picture Frame Setting ····· 5-21
9. Pre White Balance Data Input ····· 5-22
10. Auto White Balance Standard Data Input ····· 5-22
11. MAX GAIN Adjustment ····· 5-23
12. LV Standard Data Input ····· 5-23
13. White Balance ND Filter 1 Compensation ····· 5-24
14. White Balance ND Filter 2 Compensation ····· 5-24
15. Auto White Balance Adjustment ····· 5-25
16. Color Reproduction Adjustment (ND Filter OFF) ····· 5-25
17. Color Reproduction Adjustment (ND Filter 1) ····· 5-26
18. Color Reproduction Adjustment (ND Filter 2) ····· 5-26
19. White Balance Check ····· 5-27
20. Steady Shot Adjustment ····· 5-28
20-1. Steady Shot Adjustment (1) ····· 5-29
20-2. Steady Shot Adjustment (2) ····· 5-30
1-4. ELECTRONIC VIEWFINDER SYSTEM ADJUSTMENT ····· 5-31
1. VCO Adjustment (VC-242D board) ····· 5-31
2. Bright Adjustment (1) (VC-242D board) ····· 5-32
3. Bright Adjustment (2) (VC-242D board) ····· 5-32
4. Contrast Adjustment (VC-242D board) ····· 5-33
5. Backlight Consumption Current Adjustment (VC-242D board) ····· 5-33
1-5. LCD SYSTEM ADJUSTMENT ····· 5-34
1. VCO Adjustment (PD-126 board) ····· 5-34
2. Bright Adjustment (PD-126 board) ····· 5-35
3. Black Limit Adjustment (PD-126 board) ····· 5-35
4. Contrast Adjustment (PD-126 board) ····· 5-36
5. Center Level Adjustment (PD-126 board) ····· 5-36
6. V-COM Adjustment (PD-126 board) ····· 5-37
7. White Balance Adjustment (PD-126 board) ····· 5-37
2. MECHANICAL SECTION ADJUSTMENT ····· 5-38
2-1. PARTS REPLACEMENT AND PREPARATION FOR ADJUSTMENT ····· 5-38
2-1-1. Outline ····· 5-38
1. Manual test ····· 5-38
2. Step test ····· 5-38
3. Auto test ····· 5-38
2-1-2. Mechanism Condition (Position) Shifting Order List ··· 5-38
2-1-3. Mode Selector II (A-6082-282-A) Connection ····· 5-38
2-1-4. The Mechanical Adjustment Requires the Following Tools ····· 5-39
2-2. PARTS REPLACEMENT ····· 5-40
2-2-1. Tape Fall Stopper, HC Roller and HC Arm ····· 5-40
2-2-2. Drum Assembly and Drum Base Block Assembly ····· 5-40
2-2-3. Damper Assembly, Cassette Compartment Assembly and Extension Spring ····· 5-41
2-2-4. Reel Table (S) / Reel Table (T) Assembly ····· 5-42
2-2-5. Cassette Base Block Assembly, Gooseneck Gear Assembly and Relay Gear ····· 5-42
2-2-6. TG1 Adjustment Plate Assembly, Tension Coil Spring (TG1), TG1 Arm Assembly, TG7 Retainer Spring and TG7 Arm Block Assembly ····· 5-43
2-2-7. Brake Slider Assembly, Pinch Slider Assembly and Cam Gear ····· 5-44
2-2-8. Pinch Arm Assembly, Torsion Spring (TG7LD), Pinch Press Arm and Eject Arm ····· 5-45
2-2-9. GL Block Assembly, GL Driving Gear and HC Driving Arm ····· 5-45
2-2-10. Capstan Motor, Conversion Pulley, Timing Belt and Holder ····· 5-46
2-2-11. L Motor Block Assembly and FP-594 Flexible Board ·· 5-46
2-2-12. Reset Arm (S), Brake (S), Brake Rack (S), Brake (T), Brake Gear (T), Brake Spring (T) and Extension Spring ····· 5-47
2-2-13. Coaster (S) / (T) Assembly, GL Arm (S) / (T) Assembly, Guide Rail, GL Gear (S) / (T) and Torsion Spring (GLS) / (GLT) ····· 5-48
2-2-14. L Motor Assembly, Motor Shield, FP-248 Flexible Board, TG1 Spring Hook, Spring Hook Fulcrum Base, Spring Hook Driving Arm, Worm Shaft, Deceleration Gear and Motor Holder ····· 5-49
2-3. CHECK AND ADJUSTMENT ····· 5-50
2-3-1. FWD Position Checking and Adjustment ····· 5-51
2-3-2. FWD Back Tension Checking and Adjustment ····· 5-51
2-2-3. Reel Table (S) / Reel Table (T) Torque Check ····· 5-52
2-3-4. Preparation for Tape Path Checking and Adjustment ··· 5-53
2-3-5. Track Checking and Adjustment ····· 5-54
2-3-6. TG7 Slack Checking and Adjustment ····· 5-54
2-3-7. Curl Checking and Adjustment ····· 5-55
2-3-8. CUE / REV Check ····· 5-55
2-3-9. Rising Check ····· 5-56
2-4. PERIODIC CHECK ····· 5-56
2-4-1. Cleaning of Rotary Drum Assembly ····· 5-56
2-4-2. Cleaning of Tape Path System ····· 5-56
2-4-3. Periodic Checks ····· 5-57
5-3. VIDEO SECTION ADJUSTMENTS ····· 5-57
3-1. PREPARATIONS BEFORE ADJUSTMENTS ····· 5-57
3-1-1. Equipment Required ····· 5-57

3-1-2. Precautions on Adjusting ····· 5-58
3-1-3. HOW TO ENTER RECORD MODE WITHOUT CASSETTE ····· 5-58
3-1-4. HOW TO ENTER PLAYBACK MODE WITHOUT CASSETTE ····· 5-58
3-1-5. Adjusting Connectors ····· 5-59
3-1-6. Connecting the Equipment ····· 5-59
3-1-7. Alignment Tapes ····· 5-60
3-1-8. Input/Output Level and Impedance ····· 5-60
3-2. SYSTEM CONTROL SYSTEM ADJUSTMENT ····· 5-61
1. Initialization of A, B, C, D, E, F, 8 Page Data ····· 5-61
2. Serial No. Input ····· 5-61
2-1. Company ID Input ····· 5-61
2-2. Serial No. Input ····· 5-61
3. Battery End Adjustment ····· 5-63
3-3. SERVO AND RF SYSTEM ADJUSTMENT ····· 5-64
1. Cap FG Duty Adjustment (VC-242D board) ····· 5-64
2. T reel FG Duty Adjustment (VC-242D board) ····· 5-64
3. PLL f_0 & LPF f_0 Adjustment (VC-242D board) ····· 5-64
4. Switching Position Adjustment (VC-242D board) ····· 5-65
5. AGC Center Level and APC & AEQ Adjustment ····· 5-65
5-1. Preparations before adjustments ····· 5-65
5-2. AGC Center Level Adjustment (VC-242D board) ····· 5-65
5-3. APC & AEQ Adjustment (VC-242D Board) ····· 5-66
5-4. Processing after Completing Adjustments ····· 5-66
6. PLL f_0 & LPF f_0 Final Adjustment (VC-242D board) ····· 5-66
3-4. VIDEO SYSTEM ADJUSTMENTS ····· 5-67
3-4-1. Base Band Block Adjustments ····· 5-67
1. Chroma BPF f_0 Adjustment (VC-242D board) ····· 5-67
2. S VIDEO OUT Y Level Adjustment (VC-242D board) ····· 5-67
3. S VIDEO OUT Chroma Level Adjustment (VC-242D board) ····· 5-68
4. VIDEO OUT Y, Chroma Level Check (VC-242D board) ····· 5-68
3-4-2. BIST Check ····· 5-69
1. Playback System Check ····· 5-69
1-1. Preparations for Playback ····· 5-69
1-2. IC301 TRX (RF) PB BIST Check ····· 5-69
1-3. IC301 AUD (ABUS) PB BIST Check ····· 5-69
1-4. IC301 VFD PB BIST Check ····· 5-69
1-5. IC301 ENCODER BIST Check ····· 5-70
1-6. Processing after Completing Playback System Check ····· 5-70
3-5. AUDIO SYSTEM ADJUSTMENTS ····· 5-71
1. Playback Level Check ····· 5-72
2. Overall Level Characteristics Check ····· 5-72
3. Overall Distortion Check ····· 5-72
4. Overall Noise Level Check ····· 5-72
5. Overall Separation Check ····· 5-72
5-4. SERVICE MODE ····· 5-73
4-1. ADJUSTMENT REMOTE COMMANDER ····· 5-73
1. Using the adjustment remote commander ····· 5-73
2. Precautions upon using the adjustment remote commander ····· 5-73
4-2. DATA PROCESS ····· 5-74
4-3. SERVICE MODE ····· 5-75
1. Setting the Test Mode ····· 5-75
2. Emergence Memory Address ····· 5-75
2-1. EMG Code (Emergency Code) ····· 5-75
2-2. MSW Code ····· 5-76
3. Bit value discrimination ····· 5-77
4. Switch check (1) ····· 5-77
5. Switch check (2) ····· 5-78
6. Record of Use check ····· 5-78
7. Record of Self-diagnosis check ····· 5-79
8. HRS METER (Hours meter) ····· 5-80

6. REPAIR PARTS LIST

6-1. EXPLODED VIEWS ····· 6-1
6-1-1. OVERALL SECTION-1 ····· 6-1
6-1-2. OVERALL SECTION-2 ····· 6-2
6-1-3. CABINET (L) SECTION ····· 6-3
6-1-4. CABINET (R) SECTION-1 ····· 6-4
6-1-5. CABINET (R) SECTION-2 ····· 6-5
6-1-6. UPPER HANDLE SECTION ····· 6-6
6-1-7. BATTERY PANEL SECTION ····· 6-7
6-1-8. EVF SECTION ····· 6-8
6-1-9. CENTER FRAME SECTION ····· 6-9
6-1-10. LENS BLOCK SECTION ····· 6-10
6-1-11. CASSETTE COMPARTMENT, DRUM AND REEL TABLE ASSEMBLY ····· 6-11
6-1-12. TAPE GUIDE, PINCH SLIDER ASSEMBLY AND BRAKE SLIDER ASSEMBLY ····· 6-12
6-1-13. EACH GEARS AND LOADING/CAPSTAN MOTOR ASSEMBLY ····· 6-13
6-2. ELECTRICAL PARTS LIST ····· 6-14

* Color reproduction frame is shown on page 329.

SERVICE NOTE

1. POWER SUPPLY DURING REPAIRS

In this unit, about 10 seconds after power is supplied to the battery terminal using the regulated power supply (8.4V), the power is shut off so that the unit cannot operate.
These following two methods are available to prevent this. Take note of which to use during repairs.

Method 1.
Connect the servicing remote commander RM-95 (J-6082-053-B) to the LANC jack, and set the commander switch to the “ADJ” side.

Method 2.
Use the DC IN terminal. (Use the AC power adaptor. (AC-L10, AC-VQ800 etc.))

2. TO TAKE OUT A CASSETTE WHEN NOT EJECT (FORCE EJECT)

① Refer to 2-3. to remove the upper handle block assembly.
② Refer to 2-5. to remove the cabinet (L) assembly.
③ Refer to 2-5. to remove the mechanism deck (Including VC-242D board and DD-138D board).
④ Remove DD-138D board from the mechanism deck (Including VC-242D board).
⑤ Remove the CN022 (27P 0.3 mm) of VC-242D board.
⑥ Supply +4.5V from the DC power supply to the loading motor and unload with a pressing the cassette compartment.

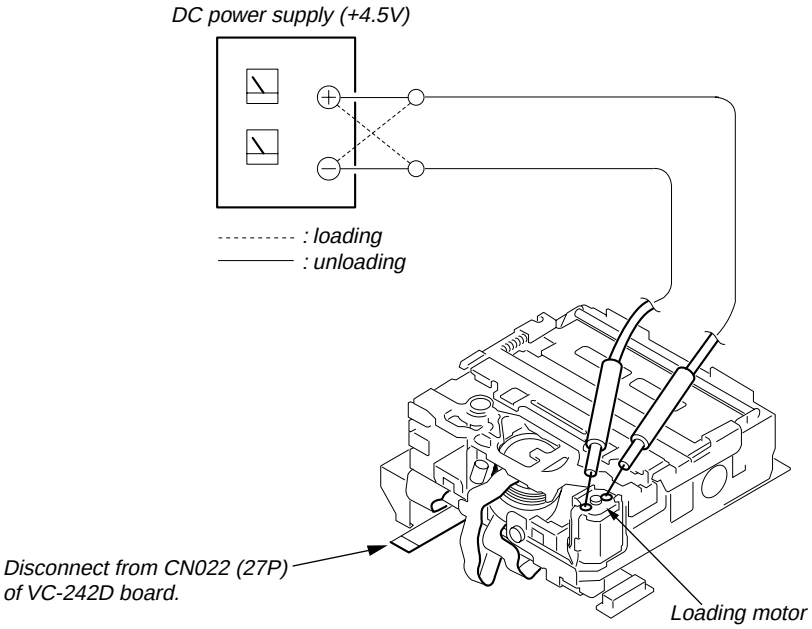

What to do when a user forgets a password

This camcorder has the forced log insertion function. A password is inputted, and this function is set up. When this function was set up, this camcorder doesn’t move if the memory stick which memorize a correct logo isn’t inserted. To release the forced logo function, the correct password must be input.
This password is memorized in the IC1105 (EEPROM) on VC-242D board. Therefore, when a user forgets the password, replace the IC1105. This IC1105 memorizes the HRS METER data (Hour meter data: page A, address 00 to 13), too. Therefore, replace the IC1105 in the following order to copy the HRS METER data.

Replacing procedure:
1) Note down the data of page A, address 00 to 13.
2) Replace IC1105 (EEPROM) on VC-242D board.
3) To page A, address 00 to 13, input the data noted down.
(Refer to “HRS METER (Hours meter)” of “5-4. SERVICE MODE”)

SELF-DIAGNOSIS FUNCTION

1. SELF-DIAGNOSIS FUNCTION

When problems occur while the unit is operating, the self-diagnosis function starts working, and displays on the viewfinder, LCD screen or LCD window what to do. This function consists of two display; self-diagnosis display and service mode display.
Details of the self-diagnosis functions are provided in the Instruction manual.

2. SELF-DIAGNOSIS DISPLAY

When problems occur while the unit is operating, the counter of the viewfinder, LCD screen or LCD window consists of an alphabet and 4-digit numbers, which blinks at 3.2 Hz. This 5-character display indicates the "repaired by:", "block" in which the problem occurred, and "detailed code" of the problem.

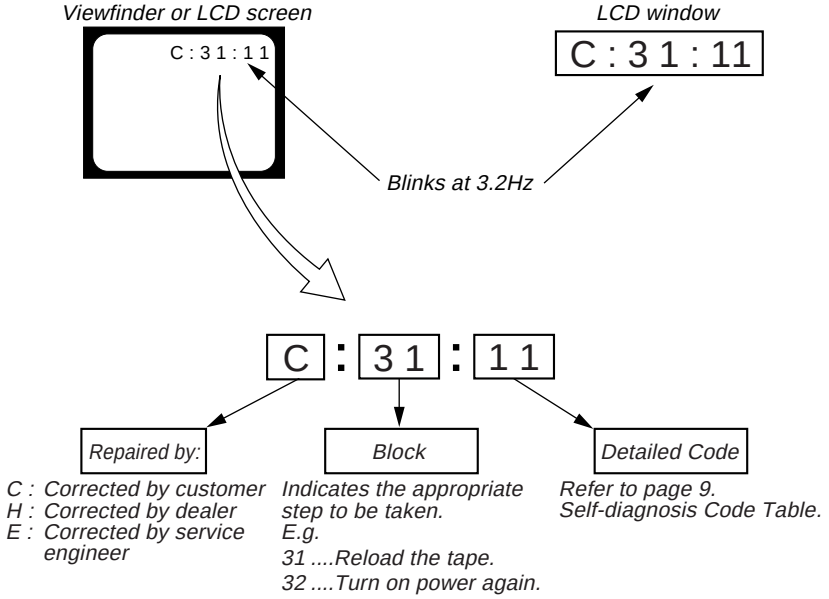

3. SERVICE MODE DISPLAY

The service mode display shows up to six self-diagnosis codes shown in the past.

3-1. Display Method

While pressing the "STOP" key, set the switch from OFF to "VCR or PLAYER", and continue pressing the "STOP" key for 5 seconds continuously. The service mode will be displayed, and the counter will show the backup No. and the 5-character self-diagnosis codes.

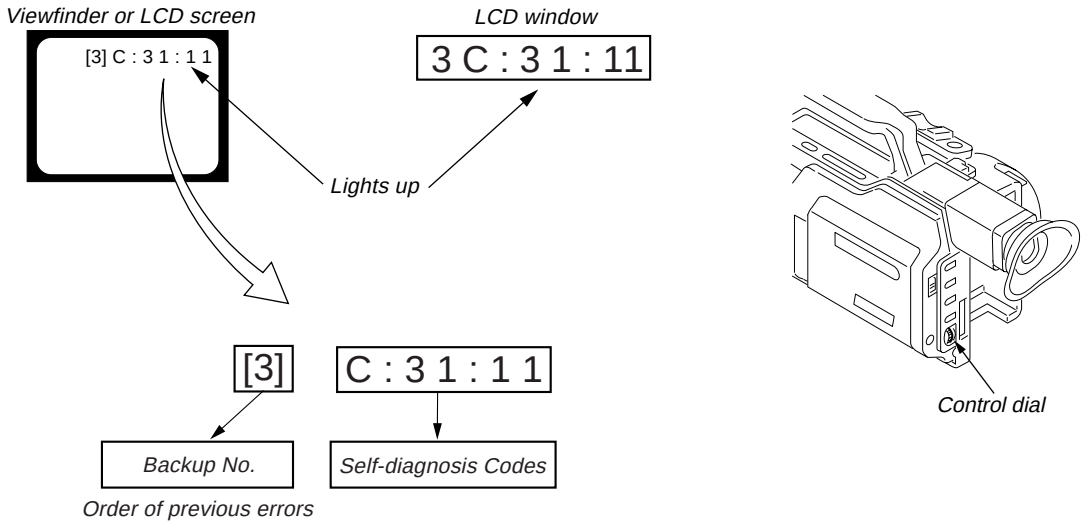

3-2. Switching of Backup No.

By rotating the control dial, past self-diagnosis codes will be shown in order. The backup No. in the [] indicates the order in which the problem occurred. (If the number of problems which occurred is less than 6, only the number of problems which occurred will be shown.)

[1] : Occurred first time [4] : Occurred fourth time
[2] : Occurred second time [5] : Occurred fifth time
[3] : Occurred third time [6] : Occurred the last time

3-3. End of Display

Turning OFF the power supply will end the service mode display.

Note: The "self-diagnosis display" data will be backed up by the coin-type lithium battery of CK-093 board BT250. When CK-093 board is removed, the "self-diagnosis display" data will be lost by initialization.

4. SELF-DIAGNOSIS CODE TABLE

Self-diagnosis Code					Symptom/State	Correction
Repaired by:	Block Function		Detailed Code			
C	0	4	0	0	Non-standard battery is used.	Use the info LITHIUM battery.
C	2	1	0	0	Condensation.	Remove the cassette, and insert it again after one hour.
C	2	2	0	0	Video head is dirty.	Clean with the optional cleaning cassette.
C	3	1	1	0	LOAD direction. Loading does not complete within specified time	Load the tape again, and perform operations from the beginning.
C	3	1	1	1	UNLOAD direction. Loading does not complete within specified time	Load the tape again, and perform operations from the beginning.
C	3	1	2	0	T reel side tape slacking when unloading.	Load the tape again, and perform operations from the beginning.
C	3	1	2	1	Winding S reel fault when counting the rest of tape.	Load the tape again, and perform operations from the beginning.
C	3	1	2	2	T reel fault.	Load the tape again, and perform operations from the beginning.
C	3	1	2	3	S reel fault.	Load the tape again, and perform operations from the beginning.
C	3	1	2	4	T reel fault.	Load the tape again, and perform operations from the beginning.
C	3	1	3	0	FG fault when starting capstan.	Load the tape again, and perform operations from the beginning.
C	3	1	4	0	FG fault when starting drum.	Load the tape again, and perform operations from the beginning.
C	3	1	4	2	FG fault during normal drum operations.	Load the tape again, and perform operations from the beginning.
C	3	2	1	0	LOAD direction loading motor time-out.	Remove the battery or power cable, connect, and perform operations from the beginning.
C	3	2	1	1	UNLOAD direction loading motor time-out.	Remove the battery or power cable, connect, and perform operations from the beginning.
C	3	2	2	0	T reel side tape slacking when unloading.	Remove the battery or power cable, connect, and perform operations from the beginning.
C	3	2	2	1	Winding S reel fault when counting the rest of tape.	Remove the battery or power cable, connect, and perform operations from the beginning.
C	3	2	2	2	T reel fault.	Remove the battery or power cable, connect, and perform operations from the beginning.
C	3	2	2	3	S reel fault.	Remove the battery or power cable, connect, and perform operations from the beginning.
C	3	2	2	4	T reel fault.	Remove the battery or power cable, connect, and perform operations from the beginning.
C	3	2	3	0	FG fault when starting capstan.	Remove the battery or power cable, connect, and perform operations from the beginning.
C	3	2	4	0	FG fault when starting drum	Remove the battery or power cable, connect, and perform operations from the beginning.
C	3	2	4	2	FG fault during normal drum operations	Remove the battery or power cable, connect, and perform operations from the beginning.
E	6	1	0	0	Difficult to adjust focus (Cannot initialize focus.)	Inspect the lens block focus reset sensor (Pin ㉕ of LA-026 board) when focusing is performed when the control dial is rotated in the focus manual mode, and the focus motor drive circuit (IC140 of LA-026 board) when the focusing is not performed.
E	6	1	1	0	Zoom operations fault (Cannot initialize zoom lens.)	Inspect the lens block zoom reset sensor (Pin ㉒ of LA-026 board) when zooming is performed when the zoom lens is operated and the zoom motor drive circuit (IC140 of LA-026 board) when zooming is not performed.
E	6	2	0	0	Steadyshot function does not work well. (With pitch angular velocity sensor output stopped.)	Inspect pitch angular velocity sensor (SE601 or SE602 of SE-108 board) peripheral circuits.
E	6	2	0	1	Steadyshot function does not work well. (With yaw angular velocity sensor output stopped.)	Inspect yaw angular velocity sensor (SE600 or SE603 of SE-108 board) peripheral circuits.

This section is extracted from instruction manual. (DSR-PD150P)

Quick Start Guide

This guide introduces you to the basic way of recording/playback. See the pages in parentheses "( )" for more information.

1 Installing the microphone (p. 9)

Install the supplied microphone with the model name (ECM-NV1) facing upward. Be sure to connect the microphone plug to the INPUT1 connector.

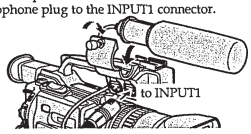

2 Connecting the mains lead (p. 14)

Use the battery pack when using your camcorder outdoors (p. 10).

Connect the plug with its ▲ mark facing toward the LCD panel side.

AC power adaptor (supplied)

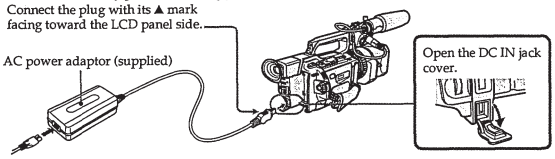

3 Inserting a cassette (p. 15)

1. While pressing the small blue button on the EJECT switch, slide it in the direction of the arrow.
2. Push the middle portion of the back of the cassette to insert it. Insert the cassette into the cassette compartment with the window facing out and the write-protect tab facing upward.
3. Close the cassette compartment by pressing the PUSH mark on it.
4. Close the cassette lid by pressing the PUSH button on the cassette lid.

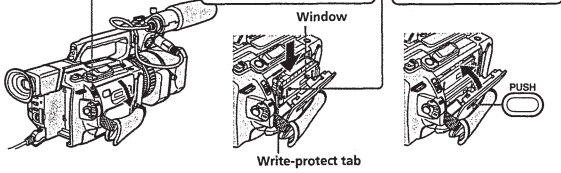

4 Recording a picture (p. 16)

Viewfinder
When the LCD panel is closed, use the viewfinder placing your eye against its eyecup.

1. Remove the hood cap.
2. Set the POWER switch to CAMERA while pressing the small green button.
3. Slide OPEN back in the ▶ mark direction to open the LCD panel.
4. Press START/STOP. Your camcorder starts recording. To stop recording, press START/STOP again.

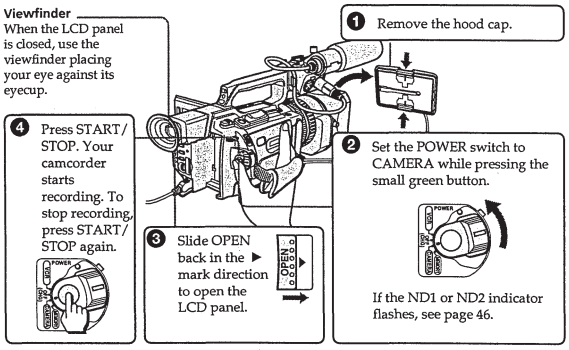

If the ND1 or ND2 indicator flashes, see page 46.

5 Monitoring the playback picture on the LCD screen (p. 26)

1. Set the POWER switch to VCR while pressing the small green button.
2. Press ◀◀ to rewind the tape.
3. Press ▶ to start playback.

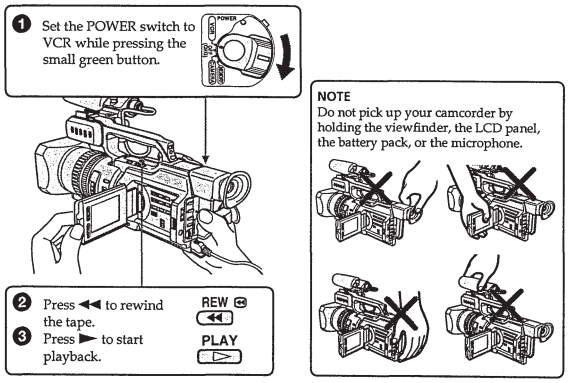

NOTE
Do not pick up your camcorder by holding the viewfinder, the LCD panel, the battery pack, or the microphone.

— Getting started —

Using this manual

As you read through this manual, buttons and settings on your camcorder are shown in capital letters.

e.g. Set the POWER switch to CAMERA.

When you carry out an operation, you can hear a beep or a melody sound to indicate that the operation is being carried out.

Note on cassette memory

Your camcorder is based on the DVCAM/DV format. We recommend that you use a tape with cassette memory CM.

The functions which require different operations depending on whether or not the tape has cassette memory are:
- Searching the end point of the recording – end search (p. 25, 29)
- Searching a recording by index – index search (p. 64)
- Searching a recording by date – date search (p. 67)
- Searching for a photo – photo search (p. 69).

The functions you can operate only with cassette memory are:
- Searching the boundaries of recorded tape by title – title search (p. 66)
- Superimposing a title (p. 94)
- Making your own titles (p. 98)
- Labeling a cassette (p. 100).

For details, see page 142.

CM only — You see this mark in the introduction of the features that are operated only with cassette memory.

Tapes with cassette memory are marked with CM (Cassette Memory).

Using this manual

Note on TV colour systems

TV colour systems differ from country to country.
To view your recordings on a TV, you need a PAL system-based TV.

Copyright precautions

Television programs, films, video tapes, and other materials may be copyrighted. Unauthorized recording of such materials may be contrary to the provision of the copyright laws.

Precautions on camcorder care

- **The LCD screen and the viewfinder are manufactured using high-precision technology. However, there may be some tiny black points and/or bright points (red, blue, green or white) that constantly appear on the LCD screen and in the viewfinder. These points occur normally in the manufacturing process and do not affect the recorded picture in any way. Effective ratio of pixels is 99.99% or more.**
- Do not let your camcorder get wet. Keep your camcorder away from rain and sea water. Letting your camcorder get wet may cause your camcorder to malfunction. Sometimes this malfunction cannot be repaired **[a]**.
- Never leave your camcorder exposed to temperatures above 60 °C (140 °F), such as in a car parked in the sun or under direct sunlight **[b]**.
- Do not place your camcorder so as to point the viewfinder or the LCD screen or lens toward the sun. The inside of the viewfinder, LCD screen, or lens may be damaged **[c]**.

[a] **[b]** **[c]**

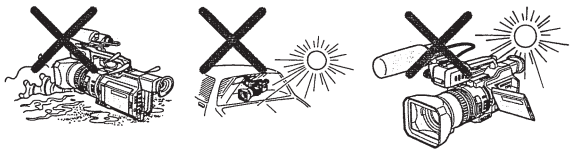

Contents of the recording cannot be compensated if recording or playback is not made due to a malfunction of the camcorder, video tape, etc.

Checking supplied accessories

Make sure that the following accessories are supplied with your camcorder.

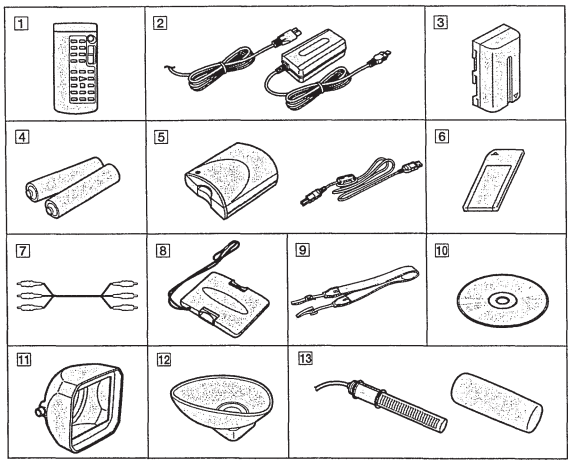

1 **Wireless Remote Commander** (1) (p. 167)

2 **AC-L10A/L10B/L10C AC power adaptor** (1), **Mains lead** (1) (p. 11)

3 **NP-F330 battery pack** (1) (p. 10, 11)

4 **R6 (size AA) battery for Remote Commander** (2) (p. 168)

5 **Memory Stick Reader/Writer** (1), **USB cable** (1)

6 **"Memory Stick"** (1) (p. 113)

7 **A/V connecting cable** (1) (p. 31, 72)

8 **Hood cap** (1) (p. 16)

9 **Shoulder strap** (1) (p. 165)

10 **Application software: PictureGear 4.1Lite (CD ROM)** (1) (p. 131)

11 **Lens hood** (1) (p. 163)

12 **Eyecup (large)** (1) (p. 20)

13 **Microphone** (1) (p. 9), **Wind screen** (1) (p. 9)

14 **Operating instructions** (2)

Step 1 Installing the microphone

Install the supplied microphone. Be sure to connect the microphone plug to the INPUT1 connector.

(1) Attach the wind screen to the microphone.
(2) Loosen the microphone holder screw and open the cover.
(3) Place the microphone into the holder with the model name (ECM-NV1) facing upward, close the cover, and tighten the screw.
(4) Connect the plug of the microphone to the INPUT 1 connector.
(5) Set the INPUT LEVEL selector to MIC or MIC ATT. When set to MIC ATT, you can reduce the volume by about 20 dB. And set the +48 V switch to ON.
(6) Select the channel to be used, using the REC CH SELECT switch. When recording only on the channel 1, set it to CH1, and when recording both on the channels 1 and 2, set it to CH1•CH2.

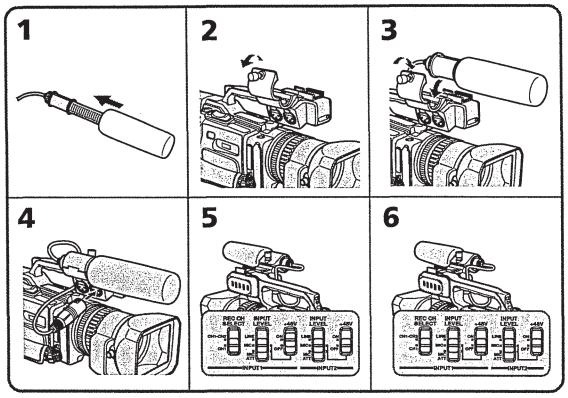

When the wind is blowing hard
Set CH1 or CH2 of WIND to ON in the menu settings according to the input (p. 104).

When you unplug the microphone plug
Unplug it while holding the PUSH button down.

Step 2 Preparing the power supply

Installing the battery pack

Install the battery pack to use your camcorder outdoors.

(1) Lift up the viewfinder.
(2) Insert the battery pack in the direction of the ▼ mark on the battery pack. Slide the battery pack until it is locked.

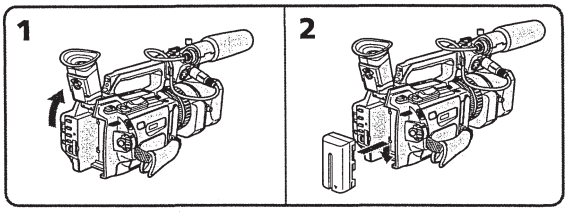

To remove the battery pack
Lift up the viewfinder.
Slide the battery pack out in the direction of the arrow while pressing BATT RELEASE down.

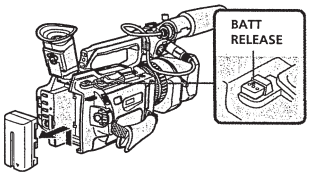

Step 2 Preparing the power supply

Charging the battery pack

Use the battery pack after charging it.
Your camcorder operates only with the "InfoLITHIUM" battery pack (L series).

(1) Open the DC IN jack cover and connect the AC power adaptor supplied with your camcorder to the DC IN jack with the plug's ▲ mark facing toward the LCD panel side.
(2) Connect the mains lead to the AC power adaptor.
(3) Connect the mains lead to mains.
(4) Set the POWER switch to OFF (CHG). Charging begins.

The remaining battery time is indicated in minutes on the display window.
When the remaining battery indicator changes to ▬, **normal charge** is completed. To fully charge the battery **(full charge)**, leave the battery pack attached for about one hour after normal charge is completed until FULL appears on the display window. Fully charging the battery allows you to use the battery longer than usual.

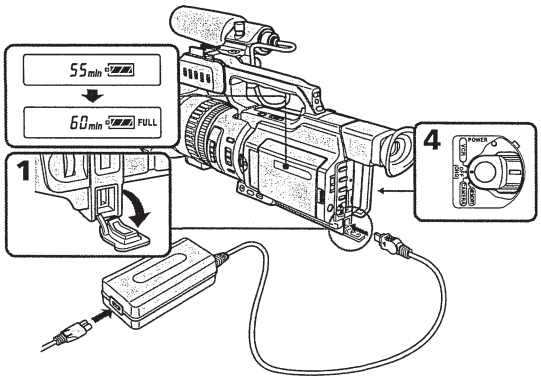

After charging the battery pack
Disconnect the AC power adaptor from the DC IN jack on your camcorder.

Note on the remaining battery time indicator
The remaining battery time indicator on the LCD screen/display window or in the viewfinder indicates the recording time using the viewfinder. The indicator may not be correct, depending on the conditions in which you are recording. When you close the LCD panel and open it again, it takes about one minute for the correct remaining battery time to be displayed.

Step 2 Preparing the power supply

Notes
- Prevent metallic objects from coming into contact with the metal parts of the DC plug of the AC power adaptor. This may cause a short-circuit, damaging the AC power adaptor.
- Keep the battery pack dry.
- When the battery pack is not to be used for a long time, charge the battery pack once fully, and then use it until it fully discharges again. Keep the battery pack in a cool place.

Until your camcorder calculates the actual remaining battery time
"- - - - min" appears in the display window.

While charging the battery pack, no indicator appears or the indicator flashes in the display window in the following cases:
– The battery pack is not installed correctly.
– The AC power adaptor is disconnected.
– Something is wrong with the battery pack.

Charging time

Battery pack	Full charge (Normal charge)
NP-F330 (supplied)	150 (90)
NP-F530/F550	210 (150)
NP-F730/F750	300 (240)
NP-F930/F950	390 (330)
NP-F960	420 (360)

Approximate minutes to charge an empty battery pack

Recording time

Battery pack	Recording with the viewfinder		Recording with the LCD screen	
	Continuous*	Typical**	Continuous*	Typical**
NP-F330 (supplied)	60 (55)	30 (30)	50 (45)	25 (25)
NP-F530	100 (90)	55 (50)	85 (75)	45 (40)
NP-F550	130 (115)	70 (60)	110 (100)	60 (55)
NP-F730	230 (205)	125 (110)	190 (170)	105 (95)
NP-F750	265 (235)	145 (130)	230 (200)	125 (110)
NP-F930	355 (320)	195 (175)	300 (270)	165 (150)
NP-F950	405 (360)	225 (200)	345 (310)	190 (170)
NP-F960	480 (430)	265 (240)	420 (375)	235 (210)

Approximate minutes of recording time when you use a fully charged battery

Step 2 Preparing the power supply

Numbers in parentheses "( )" indicate the time using a normally charged battery.
You cannot use the NP-500/510/710 battery pack on your camcorder.
* Approximate continuous recording time at 25 °C (77 °F). The battery life will be shorter if you use your camcorder in a cold environment.
** Approximate minutes when recording while you repeat recording start/stop, zooming and turning the power on/off. The actual battery life may be shorter.

Playing time

Battery pack	Playing time on LCD screen	Playing time with LCD closed
NP-F330 (supplied)	70 (65)	85 (75)
NP-F530	115 (105)	145 (130)
NP-F550	145 (130)	180 (160)
NP-F730	260 (230)	295 (265)
NP-F750	305 (265)	365 (325)
NP-F930	400 (355)	460 (415)
NP-F950	465 (420)	550 (495)
NP-F960	560 (500)	660 (590)

Approximate minutes of playing time when you use a fully charged battery

Numbers in parentheses "( )" indicate the time using a normally charged battery.
The battery life will be shorter if you use your camcorder in a cold environment.
You cannot use the NP-500/510/710 battery pack on your camcorder.

Notes
- The supplied battery pack is charged a little.
- Some types of battery packs may not be sold in your region or country.

What is "InfoLITHIUM?"
The "InfoLITHIUM" is a lithium ion battery pack which can exchange data such as battery consumption with compatible video equipment. This unit is compatible with the "InfoLITHIUM" battery pack (L series). Your camcorder operates only with the "InfoLITHIUM" battery. "InfoLITHIUM" battery packs (L series) have the mark.
"InfoLITHIUM" is a trademark of Sony Corporation.

If the camcorder is immediately turned off
Even if the remaining battery time is enough to operate, charge the battery pack fully again. The correct remaining time is displayed.

Step 2 Preparing the power supply

Connecting to mains

When you use your camcorder for a long time, we recommend that you power it from mains using the AC power adaptor.
(1) Open the DC IN jack cover and connect the AC power adaptor to the DC IN jack on your camcorder with the plug's ▲ mark facing toward the LCD panel side.
(2) Connect the mains lead to the AC power adaptor.
(3) Connect the mains lead to mains.

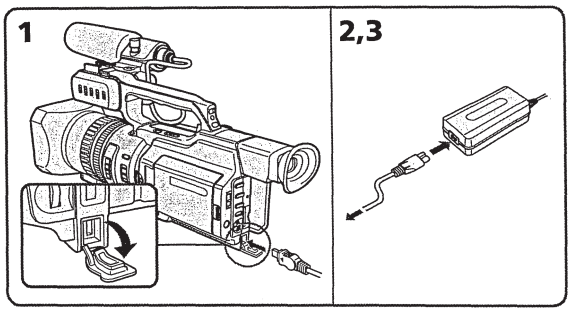

Precaution
The set is not disconnected from the AC power source (mains) as long as it is connected to the mains, even if the set itself has been turned off.

Notes
- The mains lead must only be changed at an authorized service shop.
- AC power adaptor can supply power even if the battery pack is attached to your camcorder.
- The DC IN jack has source priority. This means that the battery pack cannot supply any power if the mains lead is connected to the DC IN jack, even when the mains lead is not plugged into the mains.

Using a car battery
Use the Sony DC Adaptor/Charger (not supplied).

Step 3 Inserting a cassette

(1) Install the power source (p. 10).
(2) While pressing the small blue button on the EJECT switch, slide it in the direction of the arrow. After the cassette lid is opened, the cassette compartment automatically opens.
(3) Push the middle portion of the back of the cassette to insert it.
Insert the cassette in a straight line deeply into the cassette compartment with the window facing out and the write-protect tab facing upward.
(4) Close the cassette compartment by pressing the PUSH mark on it.
(5) Close the cassette lid until it clicks by pressing the PUSH button on the lid.

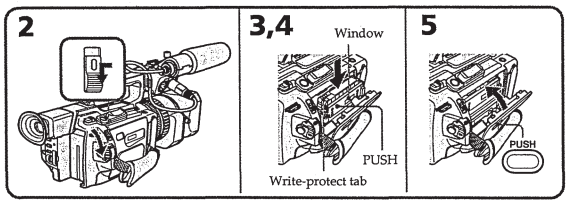

To eject a cassette
Follow the procedure above, and take out the cassette in step 3.

Notes
- The cassette lid will not be closed when you press any part of the lid other than the PUSH button.
- Do not catch your finger in the cassette lid.

When you use cassettes with cassette memory
Read the instruction about cassette memory to use this function properly (p. 142).

To prevent accidental erasure
Slide the write-protect tab on the cassette to the protect position.

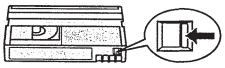

If the grip strap prevents the cassette lid from opening fully
Adjust the length of the grip strap (p. 165).

If flashes even if the cassette has been inserted
Press the PUSH button again to close the cover firmly.

Recording a picture

Your camcorder automatically focuses for you.

(1) Remove the hood cap and pull the hood cap string to fix it.
(2) Install the power source and insert a cassette. See "Step 2" and "Step 3" for more information (p. 10 to 15).
(3) Set the POWER switch to CAMERA while pressing the small green button. Your camcorder is set to the standby mode.
(4) Slide OPEN in the direction of the ▶ mark to open the LCD panel. The picture now being shot is displayed on the LCD screen, and it disappears from the viewfinder screen.
(5) Press START/STOP. Your camcorder starts recording. The "REC" indicator appears. The camera recording lamps located on the front and rear of your camcorder light up. To stop recording, press START/STOP again. You can use REC START/STOP located on the front instead of START/STOP on the rear.

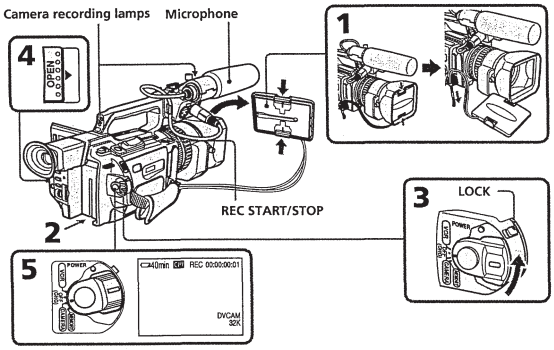

If the ND1 or ND2 indicator flashes on the LCD screen or in the viewfinder
The ND filter is necessary. Set the ND FILTER selector to 1 or 2. However, if you change the position during recording, the brightness of the picture may change or audio noise may occur. This is not a malfunction. We recommend that you check the position of the ND FILTER selector before shooting. See "Using the ND filter" on page 46.

Note
Fasten the grip strap firmly.

Recording a picture

Note on the recording format
Your camcorder records and plays back both in the DVCAM format and in the DV format SP mode. Select the format in the menu settings.

Note on the LOCK switch
When you slide the LOCK switch to the left, the POWER switch can no longer be set to MEMORY accidentally. The LOCK switch is set to the right as a default setting. We recommend that you set the LOCK switch to the left when you record on a cassette.

Note on the progressive mode
If you intend to use the images on your PC or play the images back as still images, we recommend that you set PROG. SCAN to ON in the menu settings before shooting (p. 104). The picture quality may improve in this mode, but if you shoot a moving subject, the image may shake when it is played back.

To enable smooth transition
Transition between the last scene you recorded and the next scene is smooth as long as you do not eject the cassette even if you turn off your camcorder. When you use a tape with cassette memory, however, you can make the transition smooth even after ejecting the cassette if you use the end search function (p. 25).
However, check the following:
• When you change the battery pack, set the POWER switch to OFF (CHG).
• Do not mix recordings in the DVCAM format and the DV format on one tape.
The playback picture may be distorted or the time code may not be written properly between scenes when you change the recording format.

If you leave your camcorder in standby mode for five minutes
The head drum of the camcorder automatically stops rotating. This is to prevent the tape wear and save the battery power. To re-start recording, press the START/STOP button. It may take more time to start recording. This is not a malfunction.

Usable cassettes

You can record both on mini DVCAM cassettes and on mini DV cassettes using your camcorder. When you use a mini DV cassette, set REC MODE to DV SP in the menu settings. You can record on a tape 1.5 times longer than the DVCAM format. When you want to record in the DV format or to make longer recording, use the mini DV cassette.

Notes
• If you record in the DV format, the transition of a tape may not be smooth. We recommend that you use mini DVCAM cassettes and set REC MODE to DVCAM in the menu settings to obtain reliable clear pictures.
• You cannot record on a tape in LP mode in the DV format.

If you use a mini DV cassette without setting REC MODE to DV SP
The recordable time is 2/3 time that indicated on the cassette.

Cassettes that can be played back with your camcorder
You can play back both cassettes recorded in the DVCAM format or in the DV format, however, you cannot play back cassettes that recorded in LP mode in the DV format.

Recording a picture

Adjusting the LCD screen

The LCD panel is opened up to 90 degrees and it rotates about 90 degrees to the viewfinder side and about 180 degrees to the lens side.
If you turn the LCD panel over so that it faces the other way in standby or recording mode, the ☺ indicator appears on the LCD screen and in the viewfinder **(Mirror mode)**.

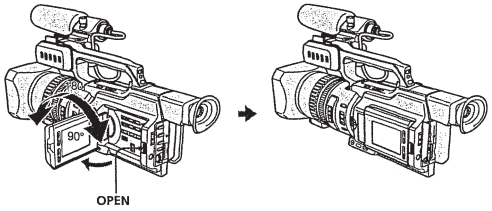

To close the LCD panel, set it vertically and swing it into the camcorder body until it clicks.

Note
When opening the LCD panel, the viewfinder is automatically turned off, however, it is not turned off when the LCD panel is turned over or the camcorder is in mirror mode.

When you use the LCD screen outdoors in direct sunlight
The LCD screen may be difficult to see. If this happens, we recommend that you use the viewfinder.

When you adjust the angle of the LCD panel
Make sure that the LCD panel is opened up to 90 degrees.

When using both the LCD screen and the viewfinder during shooting
The usable time of the battery pack when using both the LCD screen and the viewfinder will be shorter a little than when using the viewfinder only.

Pictures in the mirror mode
The picture on the LCD screen is a mirror-image. However, the recording picture will be normal.

Indicators in the mirror mode
The STBY indicator appears as ●II and REC as ●. Some of the other indicators appear mirror-reversed and others are not displayed. However, if you close the LCD panel with the LCD screen turned over, indicators appear normally.

Recording a picture

Adjusting the brightness of the LCD screen

To adjust the brightness of the LCD screen, press LCD BRIGHT + or –.
The battery life is longer when the LCD panel is closed. Use the viewfinder instead of the LCD screen to save the battery power.

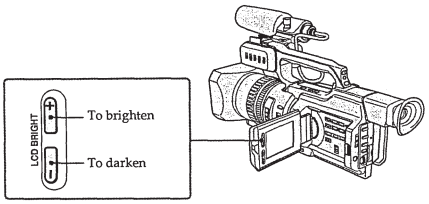

On the LCD screen backlight
You can change the brightness of the backlight. Select LCD B.L. in the menu settings (p. 104).

Even if you do the LCD screen adjustment using the LCD BRIGHT +/– buttons, or using LCD B.L. and LCD COLOUR items in the menu settings
The recorded picture will not be affected.

Recording in a low position

You can record in a low position to get an interesting recording angle. Lift up the viewfinder or rotate the LCD panel with the screen facing up to record from a low position. In this case, it is useful to use the REC START/STOP button located on the front or the camcorder.

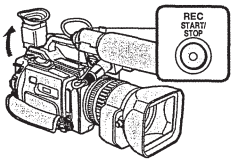

After recording

(1) Set the POWER switch to OFF (CHG).
(2) Close the LCD panel.
(3) Eject the cassette.
(4) Remove the battery pack.

Adjusting the viewfinder

If you record pictures with the LCD panel closed, check the picture with the viewfinder. Adjust the viewfinder lens to your eyesight so that the indicators in the viewfinder come into sharp focus.

Lift up the viewfinder and move the viewfinder lens adjustment lever.

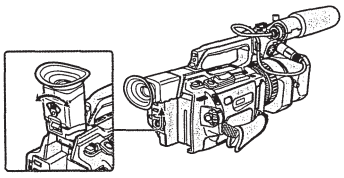

To adjust the brightness of the viewfinder screen, use the VF B.L. item in the menu settings (p. 104).

Even if you adjust the viewfinder screen backlight
The recorded picture will not be affected.

When the shooting conditions are too bright
Use the supplied large eyecup. Fit it onto the camcorder by stretching the corners a little. You can attach it with the large part of it located on both left and right.

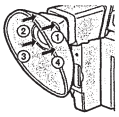

Using the zoom feature

To zoom with the zoom lever

Press the power zoom lever a little for a slower zoom. Press it deeper for a faster zoom. Using the zoom function sparingly results in better-looking recordings.
"T" side: for telephoto (subject appears closer)
"W" side: for wide-angle (subject appears farther away)

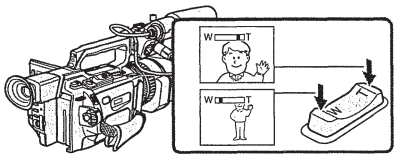

When you shoot close to a subject
If you cannot get a sharp focus, press the "W" side of the power zoom lever until the focus is sharp. You can shoot a subject that is at least about 80 cm (about 2 feet 5/8 inch) away from the lens surface in the telephoto position, or about 1 cm (about 1/2 inch) away in the wide-angle position.

To zoom with the zoom ring

Using the zoom ring, you can control the zoom by your desired speed and you can make fine adjustments.
During recording, turn the zoom ring to the desired speed.

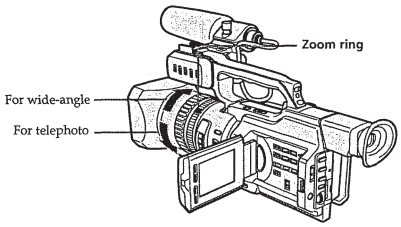

Note
If you turn the zoom ring quickly, the zoom may not respond to the zoom ring adjustment. Rotate the zoom ring with appropriate speed.

Using the digital zoom – Zoom greater than 12×

Zoom greater than 12× is performed digitally, if you set D ZOOM to 24× or 48× in the menu settings. The digital zoom function is set to OFF as a default setting (p. 104). If you use the digital zoom function, the picture quality deteriorates.

The right-ended portion of the bar shows the digital zooming zone. The digital zooming zone appears when you set D ZOOM to 24× or 48×.

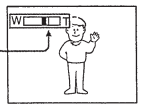

You cannot use the digital zoom:
– When you set PROG. SCAN to ON in the menu settings (p. 104).
– When the POWER switch is set to MEMORY.

Indicators displayed during recording

The indicators are not recorded on the tapes.

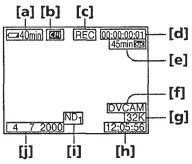

[a] Remaining battery time indicator
This appears after you turn on the power and wait for a while.
[b] Cassette memory indicator
This appears when using a tape with cassette memory.
[c] STBY/REC indicator
[d] Time code/User bits
[e] Remaining tape indicator
This appears after you insert a cassette.
[f] DVCAM format/DV format in SP mode indicator
[g] Audio mode indicator
[h] Time indicator
[i] ND filter indicator
This flashes when the ND FILTER selector should be set. After you have set the ND FILTER selector, the ND FILTER position is indicated. (When the ND OFF position is selected, the indication disappears.)
[j] Date indicator

Time code
The time code indicates the recording or playback time, "00:00:00:00" (hours : minutes : seconds : frames). You cannot rewrite only the time code. The time code can be preset (p. 89) or be reset to start the code from 00:00:00:00 (p. 90).

On user bits display
You can display the user bits, pressing TC/U-BIT (p. 93).

Remaining tape indicator
The indicator may not be displayed accurately depending on the tape.

Note on the date/time indicator
Recording date/time is not displayed during shooting, however, it is automatically recorded on the tape. You can check the recording date/time during playback by pressing DATA CODE. When you want to display the date and time during shooting, set DATE REC to ON in the menu settings. However, once you record with the date and time, you cannot erase them.

Shooting backlit subjects (BACK LIGHT)

When you shoot a subject with the light source behind the subject or a subject with a light background, use the backlight function.

Press BACK LIGHT in standby, recording, or memory mode.
The indicator appears on the LCD screen or in the viewfinder.
To cancel, press BACK LIGHT again.

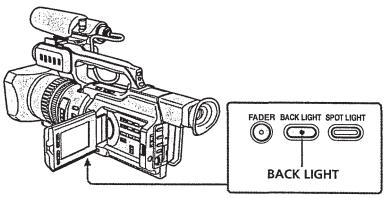

If you press SPOT LIGHT when using the backlight function
The backlight function will be cancelled and the spot light function will be enabled.

When you manually adjust more than two of the following functions: iris, gain, and shutter speed
You cannot use the backlight function.

Recording a picture

Spot light

This function prevents people's faces, for example, from appearing excessively white when shooting subjects lit by strong light, such as in the theater.

Press SPOT LIGHT in standby, recording, or memory mode.
The indicator appears on the LCD screen or in the viewfinder.
To cancel, press SPOT LIGHT again.

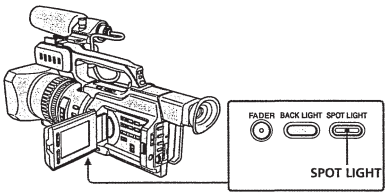

If you press BACK LIGHT when using the spot light function
The spot light function will be cancelled and the backlight function will be enabled.

You cannot use the spotlight mode while in the following settings:
- Old movie
- Shutter speed value of 1/25 or smaller
- When you manually adjust more than two of the following functions: iris, gain, and shutter speed

Checking the recording – END SEARCH / EDITSEARCH / Rec Review

You can use these buttons to check recorded pictures or shoot so that the transition between the last recorded scene and the next scene you record is smooth.

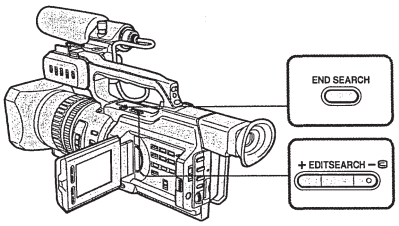

Searching the end point of the recording — END SEARCH

You can easily go to the end of the last recorded portion.

Press END SEARCH in standby mode.
The camcorder rewinds or fast-forwards the tape and the last five-second recorded picture is played back. After playback the camcorder turns to standby mode. You can monitor the sound from the speaker or headphones.

Changing the next recording start point — EDITSEARCH

You can change the next recording start point in standby mode.

Hold down the +/– side of EDITSEARCH in standby mode. The recorded picture is played back.
+: to go forward
–: to go backward
Release EDITSEARCH to stop playback. If you press START/STOP, re-recording begins from the point you released EDITSEARCH. You cannot monitor the sound.

Checking the last recorded picture — Rec Review

You can check the last recorded portion.

Press the – side of EDITSEARCH momentarily in standby mode.
The last few-seconds of picture is played back and the camcorder returns to standby.
You can monitor the sound from the speaker or headphones.

End search function
When you use a tape without cassette memory, the end search function does not work once you eject the cassette after you have recorded on the tape. If you use a tape with cassette memory, the end search function works even once you eject the cassette.
If there is a blank portion at the beginning or between the recorded portions, the end search function may not work correctly (p. 142).

Playing back a tape

You can monitor the playback picture on the LCD screen. If you close the LCD panel, you can monitor the playback picture in the viewfinder. You can also control playback using the Remote Commander supplied with your camcorder.
(1) Install the power source and insert the recorded tape.
(2) Set the POWER switch to VCR while pressing the small green button. The video control buttons light up.
(3) Slide OPEN in the direction of the ▶ mark to open the LCD panel.
(4) Press ◀◀ to rewind the tape.
(5) Press ▶ to start playback.
(6) To adjust the volume, press either of the VOLUME +/– buttons .

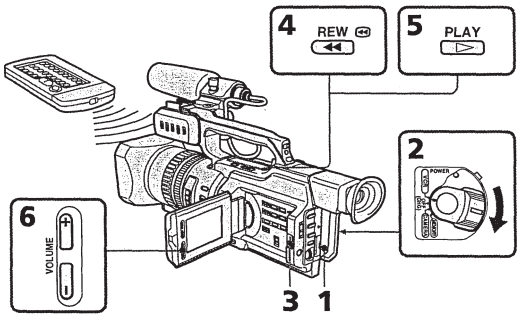

To stop playback
Press ■.

Playing back a tape

When monitoring on the LCD screen
You can turn the LCD panel over and move it back to the camcorder body with the LCD screen facing out.

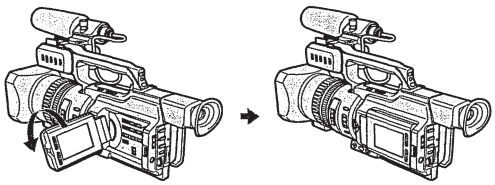

When you close the LCD panel
You cannot monitor the sound from the speaker. However, when the LCD panel is turned over to view on the LCD screen, you can monitor the sound from the speaker.

To control the display of the screen indicators

Press DISPLAY on the camcorder or on the Remote Commander supplied with your camcorder.
The indicators appear on the LCD screen or in the viewfinder.
To make the indicators disappear, press DISPLAY again.

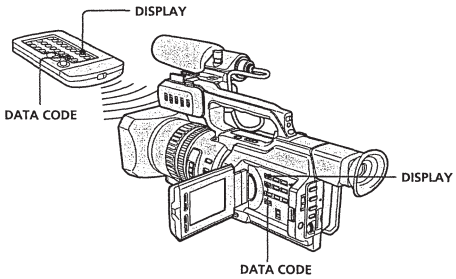

Using the data code function

Your camcorder automatically records not only images on the tape but also the recording data (date/time or various settings when recorded) **(Data code)**.

Press DATA CODE on the camcorder or on the Remote Commander supplied with your camcorder in playback mode.

The display changes as follows:
date/time → various settings (SteadyShot, white balance, gain, shutter speed, aperture value, exposure mode) → no indicator

Date/time **Various settings**

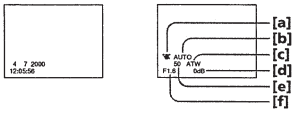

[a] SteadyShot OFF indicator
[b] Exposure mode indicator
[c] White balance indicator
[d] Gain indicator
[e] Shutter speed indicator
[f] Aperture value

To not display the various settings
Set DATA CODE to DATE in the menu settings (p. 104).
The display changes as follows:
date/time ←→ no indicator

Recording data
Recording data is your camcorder's information when you have recorded something. In CAMERA mode, the recording data will not be displayed.

When you use the data code function, "-- -- ----" (date) or "-- : -- : --" (time) appears if:
– A blank portion of the tape is being played back.
– The tape is unreadable due to tape damage or noise.
– The tape was recorded by the camcorder without the date and time set.

Data code
When you connect your camcorder to the TV, the data code also appears on the TV screen (p. 31).

Note on the date/time indicator
Recording date/time is not displayed during shooting, however, it is automatically recorded on the tape. You can check the recording date/time during playback by pressing DATA CODE. When you want to display the date and time during shooting, set DATE REC to ON in the menu settings. However, once you record with the date and time, you cannot erase them.

If the aperture adjustment is set to minimum
"CLOSE" is displayed at the location of the aperture value.

Various playback modes

To operate video control buttons, set the POWER switch to VCR.

To view a still picture (playback pause)
Press ❚❚ during playback. To resume normal playback, press ► or ❚❚.

To advance the tape
Press ►► in stop mode. To resume normal playback, press ►.

To rewind the tape
Press ◄◄ in stop mode. To resume normal playback, press ►.

To change the playback direction
Press < on the Remote Commander during playback to reverse the playback direction. To resume normal playback, press ►.

To locate a scene monitoring the picture (picture search)
Keep pressing ◄◄ or ►► during playback. To resume normal playback, release the button.

To monitor the picture at high-speed while advancing or rewinding the tape (skip scan)
Keep pressing ◄◄ while rewinding or ►► while advancing the tape. To resume rewinding or advancing, release the button.

To view the picture at slow speed (slow playback)
Press ❚► during playback. For slow playback in the reverse direction, press < on the Remote Commander, then press ❚►. To resume normal playback, press ►.

To view the picture at double speed
Press ×2 on the Remote Commander during playback. For double speed playback in the reverse direction, press <, then press ×2 on the Remote Commander. To resume normal playback, press ►.

To view the picture frame-by-frame
Press ❚❚► on the Remote Commander in playback pause mode. For frame-by-frame playback in the reverse direction, press ◄❚❚. To resume normal playback, press ►.

To search the last scene recorded (END SEARCH)
Press END SEARCH in stop mode. The last five seconds of the recorded portion plays back and stops.

In various playback modes
• Sound is muted.
• The previous picture may remain as a mosaic image during playback.

When the playback pause mode lasts for five minutes
Your camcorder automatically enters the stop mode. To resume playback, press ►.

Slow playback
Slow playback can be performed smoothly on your camcorder: however, this function does not work for a signal output through the i DV IN/OUT jack.

When you play back a tape in reverse
Horizontal noise may appear at the center, or the top and bottom of the screen. This is not a malfunction.

Note on DV-formatted tapes
You can play back DV-formatted tapes on this camcorder if the tape is recorded in SP mode. "DV SP" appears on the LCD screen or in the viewfinder during playback.
You cannot play back DV-formatted tapes recorded in LP mode.

Viewing the recording on TV

Connect your camcorder to your TV or VCR with the A/V connecting cable supplied with your camcorder to watch the playback picture on the TV screen. You can operate the video control buttons in the same way as when you monitor playback pictures on the LCD screen. When monitoring the playback picture on the TV screen, we recommend that you power your camcorder from mains using the AC power adaptor (p. 14). Refer to the operating instructions of your TV or VCR.

Open the jack cover. Connect your camcorder to the TV using the A/V connecting cable supplied with your camcorder. Then, set the TV/VCR selector on the TV to VCR.

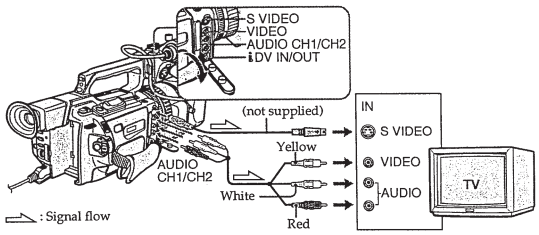

If your TV is connected to a VCR

Connect your camcorder to the line input on the VCR by using the A/V connecting cable supplied with your camcorder. Set the input selector on the VCR to LINE.

If your TV or VCR is a monaural type

Connect with the TV or VCR using the audio cable (monaural ←→ stereo) (not supplied).

If your TV or VCR has an S video jack
Connect using an S video cable (not supplied) to obtain high-quality pictures. With this connection, you do not need to connect the yellow (video) plug of the A/V connecting cable.
Connect the S video cable (not supplied) to the S video jacks on both your camcorder and the TV or the VCR.
This connection produces higher quality DVCAM/DV format pictures.

When you adjust the TV screen
If you monitor the shooting picture, not the playback picture, set COLOUR BAR to ON in the menu settings (p. 104). The colour bar is displayed on the TV screen.

Recording a still image on a tape – Tape Photo recording

You can record still images on tapes with all the pixels in the progressive mode. See page 34 for details. This mode is useful when you print images using a video printer (not supplied).
Besides the operation described here, your camcorder can record still images on a "Memory Stick" (p. 118).

(1) In standby mode, keep pressing PHOTO lightly until a picture freezes. The CAPTURE indicator appears. Recording does not start yet.
To change the image, release PHOTO, select an image again, and then press and hold PHOTO lightly.

(2) Press PHOTO deeper.
The still image on the LCD screen or in the viewfinder is recorded for about seven seconds. The sound during those seven seconds is also recorded.
The still image is displayed on the LCD screen or in the viewfinder until recording is completed.

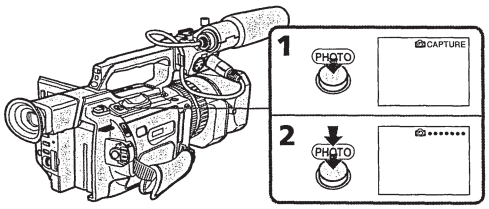

The number of still images recordable on a cassette
You can record about 340 images in the DVCAM format on a 40-minute DVCAM cassette and about 510 images in the DV format on a 60-minute DV cassette.

Notes
- During tape photo recording, you cannot change the mode or setting.
- The PHOTO button does not work:
  - While the fader function is set or in use.
  - While the digital effect function is set or in use.
- Do not shake the camcorder during tape photo recording, the recorded image may be blurred.

To do tape photo recording using the Remote Commander
Press PHOTO on the Remote Commander. Your camcorder immediately records an image on the LCD screen or in the viewfinder.

When you do tape photo recording during normal CAMERA recording
You cannot check an image on the LCD screen or in the viewfinder by pressing PHOTO lightly. Press PHOTO deeper. The still image is then recorded for about seven seconds and your camcorder returns to standby mode.

Recording a still image on a tape – Tape Photo recording

Printing the still image

You can print a still image by using a video printer (not supplied). Connect with the video printer using the A/V connecting cable supplied with your camcorder.
Connect the yellow plugs of the cable to the video input of the video printer and the VIDEO jack on your camcorder. Refer to the operating instructions of the video printer as well.

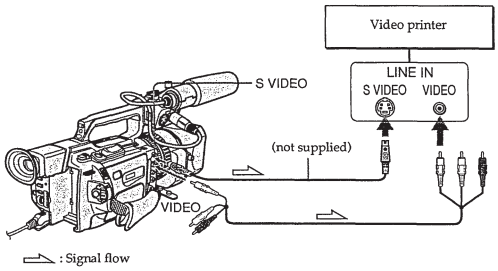

If the video printer is equipped with an S video input
Use an S video connecting cable (not supplied). Connect it to the S VIDEO jack on your camcorder and the S video input of the video printer.

Shooting with all the pixels – PROG. SCAN

When you handle the digital images on your PC, set PROG. SCAN to ON before shooting. You can record the images on a tape with higher resolution.
Since the image taken in progressive mode would be stabilized even in pause mode, it is especially useful when you analyze high-speed actions such as sports scenes.

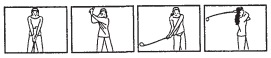

(1) Press MENU to display the menu in standby mode.
(2) Turn the SEL/PUSH EXEC dial to select , then press the dial.
(3) Turn the SEL/PUSH EXEC dial to select PROG. SCAN, then press the dial.
(4) Turn the SEL/PUSH EXEC dial to select ON, then press the dial.
(5) Press MENU to erase the menu display. The PROG. SCAN indicator lights up.

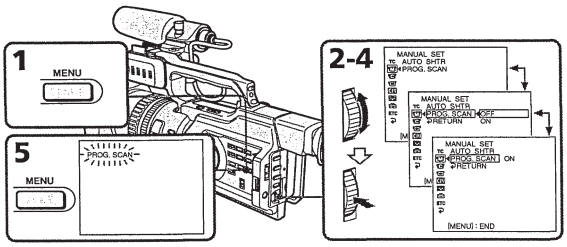

To return to normal mode
Select OFF in step 4, then press the SEL/PUSH EXEC dial.

Note on the progressive mode
A normal TV broadcast divides the screen into two finer fields and displays them in turns every 1/50 of a second. Thus, the actual image displayed in an instant covers only half of the apparent image area. Displaying the whole image simultaneously on a full screen is called displaying with all the pixels. In this mode, the resolution of the still picture is clearer than in the normal mode. This camcorder takes in an image every 2/25 of a second, which may cause the image of a moving object to go out of focus. This camcorder is originally programed to record in the normal TV format.

When shooting under fluorescent light
When shooting in progressive mode under fluorescent light or light bulbs, a rare phenomenon may happen in which the screen lights up brightly (Flicker phenomenon). This is not a malfunction. If you want to stop this phenomenon, set PROG. SCAN to OFF in the menu settings.

On digital zooming
You cannot use digital zooming in this mode.

When the auto logo insert function is activated
You cannot use the progressive mode.

Using the guide frame

You can easily make the picture be on a horizontal line using the guide frame. The guide frame is not recorded.

(1) Press MENU to display the menu in standby mode.
(2) Turn the SEL/PUSH EXEC dial to select , then press the dial.
(3) Turn the SEL/PUSH EXEC dial to select GUIDEFRAME, then press the dial.
(4) Turn the SEL/PUSH EXEC dial to select ON, then press the dial.
(5) Press MENU to erase the menu display. The guide frame is displayed on the LCD screen or in the viewfinder.

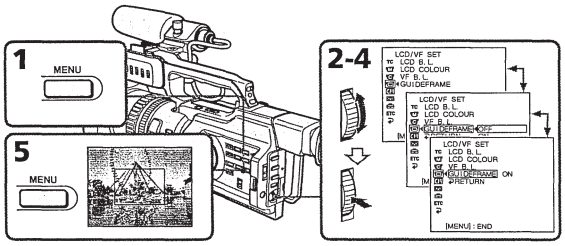

To clear the guide frame
Select OFF in step 4, then press the SEL/PUSH EXEC dial or simply press DISPLAY.

Note
The guide frame indicates only a rough level. The size and position of the guide frame do not affect the setting of the camcorder.

If you set GUIDEFRAME to ON
The other screen indicators are also displayed on the LCD screen or in the viewfinder.

Using the wide mode

You can record a 16:9 wide picture to watch on a 16:9 wide-screen TV (16:9WIDE). Black bands appear on the LCD screen or in the viewfinder during recording in 16:9WIDE mode **[a]**. The picture during playback on a normal TV **[b]** or on a wide-screen TV **[c]** is compressed in the widthwise direction. If you set the screen mode of the wide-screen TV to the full mode, you can watch pictures of normal images **[d]**.

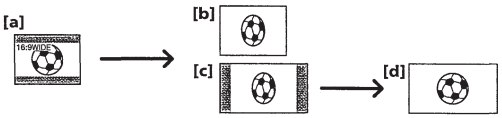

In standby mode, set 16:9WIDE to ON in in the menu settings (p. 104).

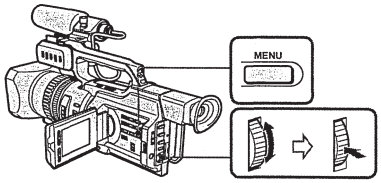

To cancel the wide mode

Set 16:9WIDE to OFF in the menu settings (p. 104).

In wide mode, you cannot select the following modes:
- Old movie
- Progressive mode

During recording
You cannot operate the wide mode function. When you cancel the wide mode, set your camcorder to the standby mode and then set 16:9WIDE to OFF in the menu settings.

Using the fader function

You can fade the picture in or out to give your recording a professional appearance.

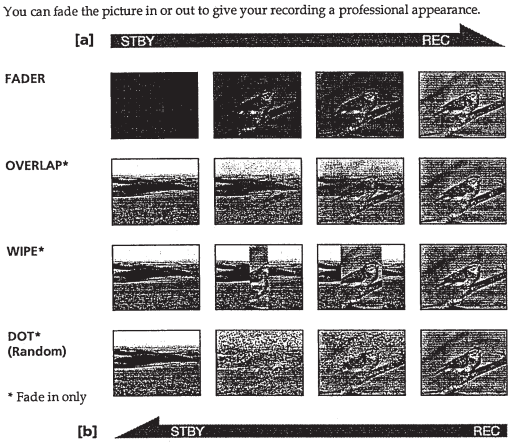

MONOTONE
When fading in, the picture gradually changes from black-and-white to colour.
When fading out the picture gradually changes from colour to black-and-white.

Using the fader function

(1) When fading in [a]
In standby mode, press FADER until the desired fader indicator flashes.
When fading out [b]
In recording mode, press FADER until the desired fader indicator flashes.
The indicator changes as follows:
FADER → MONOTONE → OVERLAP → WIPE → DOT → no indicator
The last selected fader mode is indicated first.

(2) Press START/STOP. After the fade in/out is carried out, your camcorder automatically returns to the normal mode.

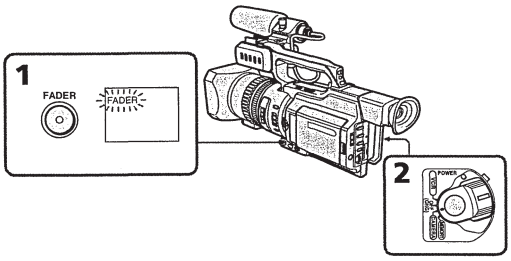

To cancel the fader function

Press FADER until the indicator disappears.

Note
You cannot use the following functions while using the fader function, and vice versa:
- Digital effect
- Tape Photo recording
- Interval recording
- Cut recording

When the OVERLAP, WIPE, or DOT indicator appears
Your camcorder automatically stores the image recorded on a tape. As the image is being stored, the fader indicator flashes fast, and the playback picture appears.

Using special effects – Digital effect

You can add special effects to recorded pictures using the various digital functions. The sound is recorded normally.

STILL
You can record a still image so that it is superimposed on a moving picture.

FLASH (FLASH MOTION)
You can record still images successively at constant intervals.

LUMI. (LUMINANCEKEY)
You can swap a brighter area in a still image with a moving picture.

TRAIL
You can record the picture so that an incidental image like a trail is left.

OLD MOVIE
You can add an old movie type atmosphere to pictures. The black bands appear on the upper and lower of the screen to change the virtual screen size to the cinemascope size, and the picture effect is set to SEPIA.

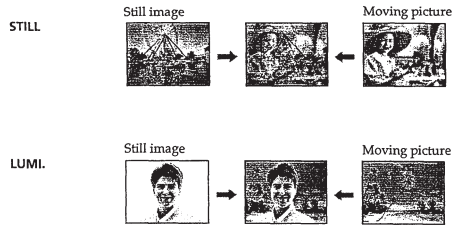

(1) In standby or recording mode, press DIGITAL EFFECT. The digital effect indicator appears.
(2) Turn the SEL/PUSH EXEC dial to select the desired digital effect mode.
The digital effect indicator changes as follows:
STILL ⟷ FLASH ⟷ LUMI. ⟷ TRAIL ⟷ OLD MOVIE
(3) Press the SEL/PUSH EXEC dial. The indicator lights up and the bar appears.
In STILL and LUMI. modes, the still image is stored in memory.
(4) Turn the SEL/PUSH EXEC dial to adjust the effect.

Items to be adjusted

STILL	The rate of the still image you want to superimpose on the moving picture
FLASH	The interval of flash motion
LUMI.	The colour scheme of the area in the still image which is to be swapped with a moving picture
TRAIL	The time until the incidental image vanishes
OLD MOVIE	No adjustment necessary

The longer the bar on the screen, the stronger the digital effect. The bar appears in the following modes: STILL, FLASH, LUMI. and TRAIL.

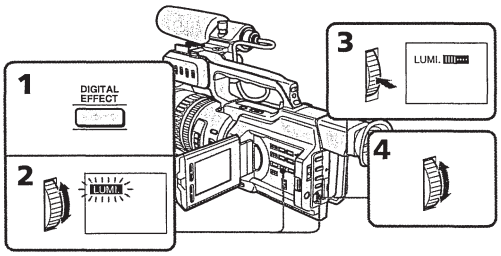

To cancel the digital effect
Press DIGITAL EFFECT. The digital effect indicator disappears.

Notes
- The following functions do not work in digital effect mode:
  - Fader
  - Tape Photo recording
  - Shutter speed (1/25 or smaller) adjustment
- The following functions do not work in old movie mode:
  - Wide mode
  - Spot light mode
  - Shutter speed adjustment

When you turn the power off
The digital effect will be automatically cancelled.

Shooting with manual adjustment

Under normal conditions, this unit automatically makes various adjustments as it shoots. However, you can adjust the following functions manually to suit your preference.

Functions you can adjust by setting the AUTO LOCK selector to the center (auto lock release) position
Iris, gain, shutter speed, and white balance

Functions you can adjust in menu settings
Deactivating the SteadyShot

Functions you can adjust by using other selectors/rings
ND filter, zebra pattern, focus, AE shift, and zoom

The following describes how to adjust all the functions mentioned above except white balance (p. 50), focus (p. 58), and zoom (p. 21).

AUTO LOCK selector
Set the selector as shown below to maintain or release the settings of the functions.

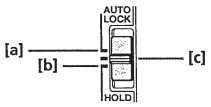

AUTO LOCK [a]
Select this position to let the unit adjust all the functions automatically.

HOLD [b]
Select this position after setting the functions manually to maintain the settings.

Manual position (AUTO LOCK release) [c]
Select this position to adjust the functions listed above manually.

If you use the video flash light (not supplied)
We recommend that you set the AUTO LOCK selector to AUTO LOCK.

Note
When you manually adjust more than two of the following functions during backlight or spot light mode: iris, gain, and shutter speed, the backlight or spot light function will be automatically cancelled.

Adjusting the iris

Adjust the iris manually under the following cases.

[a]

[b]

[a]
- The background is too bright (back lighting)
- Insufficient light: most of the picture is dark

[b]
- Bright subject and dark background
- To record the darkness faithfully

(1) Set the AUTO LOCK selector to the center (auto lock release) position while the camcorder is in standby, recording, or memory mode.
(2) Press IRIS. The iris indicator appears on the LCD screen or in the viewfinder.
(3) Turn the IRIS dial to adjust the iris.
As you turn the dial, the F value changes as follows:
F1.6 ⟷ ... ⟷ F11 ⟷ CLOSE.
For a smaller aperture, select a higher value. The gain and shutter speed change in accordance with the selected F value.

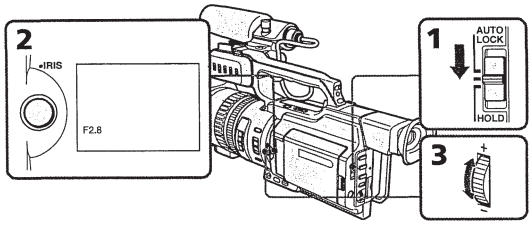

To return to automatic iris mode
Set the AUTO LOCK selector to AUTO LOCK or press IRIS. The iris indicator disappears from the LCD or viewfinder screen.

About the depth of field

The depth of field is the in-focus range, measured from the distance behind a subject to the distance in front. The depth of field can vary with the iris (F value) and the focal length. Lowering the F value (large iris) reduces the depth of field. Raising the F value (small iris) provides a larger depth of field. Zooming in telephoto position offers a smaller depth of field while the depth of field in the wide-angle position is greater.

The depth of field	Shallow	Deep
Iris	Near open (Low F value)	Near close (High F value)
Zoom	Telephoto (T)	Wide (W)

Adjusting the gain

(1) Set the AUTO LOCK selector to the center (auto lock release) position while the camcorder is in standby, recording, or memory mode.
(2) Press GAIN. The gain indicator appears on the LCD screen or in the viewfinder.
(3) Turn the SEL/PUSH EXEC dial to adjust the gain.
As you turn the dial the gain value changes between 0 dB and 18 dB.

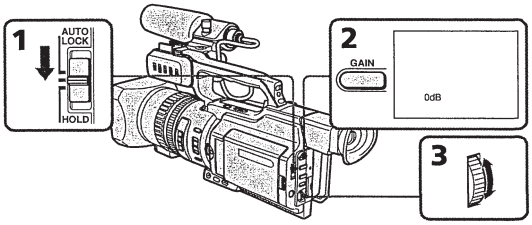

To return to automatic gain mode

Set the AUTO LOCK selector to AUTO LOCK or press GAIN. The gain indicator disappears from the LCD or viewfinder screen.

Adjusting the shutter speed

(1) Set the AUTO LOCK selector to the center (auto lock release) position while the camcorder is in standby, recording, or memory mode.
(2) Press SHUTTER SPEED. The shutter speed indicator appears on the LCD screen or in the viewfinder.
(3) Turn the SEL/PUSH EXEC dial to select the desired speed. As you turn the dial, the shutter speed changes as follows:
1/3 ⟷ 1/6 ⟷ 1/12 ⟷ ... ⟷ 1/3500 ⟷ 1/6000 ⟷ 1/10000
To increase the shutter speed, select a smaller setting (large value indicator on the LCD screen or in the viewfinder).

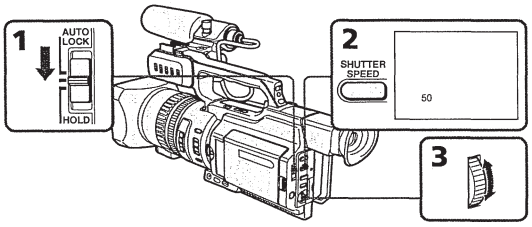

To return to automatic shutter speed mode

Set the AUTO LOCK selector to AUTO LOCK or press SHUTTER SPEED. The shutter speed indicator disappears from the LCD or viewfinder screen.

When shooting at slow shutter speed
At slow shutter speed, automatic focus may be lost. Adjust the focus manually using a tripod.

When shooting under fluorescent light or light bulbs
When shooting under fluorescent light or light bulbs, a rare phenomenon may happen in which the screen lights up brightly depending on the shutter speed (Flicker phenomenon).

If you set the shutter speed value to 1/25 or smaller
You cannot use the spot light (p. 24) and digital effect (p. 39) functions.

Using the ND filter

Using the ND filter (the ND filter 1 setting corresponds to 1/4 of the quantity of light and the ND filter 2 setting corresponds to 1/32 of the quantity of light), you can record a picture clearly by adjusting light amounts, even if you shoot under too bright conditions.

When the ND1 or ND2 indicator flashes on the LCD screen or in the viewfinder

The ND filter is necessary.
When ND 1 flashes, set the ND FILTER selector to 1 so that the ND 1 indicator lights up on the LCD screen or in the viewfinder.
When ND 2 flashes, set the ND FILTER selector to 2 so that the ND 2 indicator lights up on the LCD screen or in the viewfinder.

When ND OFF flashes on the LCD screen or in the viewfinder

The ND filter is not necessary. Set the ND FILTER selector to OFF so that the indicator disappears from the LCD or viewfinder screen.
The ND filter is now deactivated.

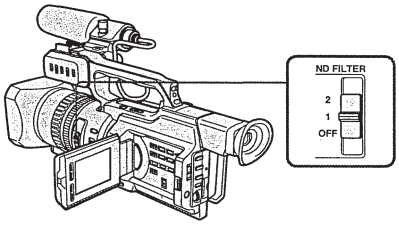

Note
If you set the ND FILTER selector to another positions during recording, the picture may be blurred or audio noise may occur. We recommend that you check the position of the ND FILTER selector before shooting.

If you use the video flash light (not supplied)
Set the ND FILTER selector to OFF when you use the flash.

Shooting with the zebra pattern

You can set the camcorder to display a zebra pattern (diagonal stripes) in the portion of the picture on the LCD screen or in the viewfinder with a subject whose brightness exceeds a certain level. The portion of the picture where zebra pattern appears is an area of high brightness and overexposure. You can check the picture level of a subject by displaying the zebra pattern. Use the zebra pattern as a guide for adjusting the exposure and shutter speed so that you can get the desired picture.

Set the ZEBRA selector to 70 or 100 in standby or memory mode.

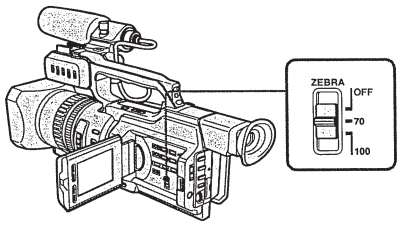

Setting	Meaning
70	The zebra pattern appears in the portion of the picture on the LCD screen or in the viewfinder with a subject whose brightness is about 70 %.
100	The zebra pattern appears in the portion of the picture on the LCD screen or in the viewfinder with a subject whose brightness exceeds more than 100 %.
OFF	The zebra pattern does not appear on the LCD screen or in the viewfinder.

To erase the zebra pattern

Set the ZEBRA selector to OFF.

Note on shooting with the zebra pattern
Even though you see the zebra pattern on the LCD screen or in the viewfinder, the zebra pattern is not recorded.

Releasing the SteadyShot function

When the SteadyShot function is working, the camcorder compensates for camera-shake.

You can release the SteadyShot function when you do not need to use it. The indicator appears on the LCD screen or in the viewfinder. Do not use the SteadyShot function when shooting a stationary object with a tripod.

(1) Press MENU to display the menu in standby or memory mode.
(2) Turn the SEL/PUSH EXEC dial to select , then press the dial.
(3) Turn the SEL/PUSH EXEC dial to select STEADYSHOT, then press the dial.
(4) Turn the SEL/PUSH EXEC dial to select OFF, then press the dial.
(5) Press MENU to erase the menu display.

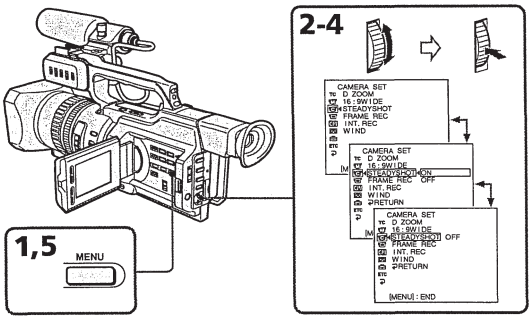

To activate the SteadyShot function again

Select ON in step 4, then press the SEL/PUSH EXEC dial.

Notes on the SteadyShot function

- The SteadyShot function will not correct excessive camera-shake.
- If you use a tele conversion lens (not supplied) or a wide conversion lens (not supplied), these lens may influence the SteadyShot function.

Adjusting the AE shift

You can adjust the AE shift in accordance with shooting conditions and a subject.

(1) Press AE SHIFT in standby, recording, or memory mode. The AE shift indicator appears on the LCD screen or in the viewfinder.
(2) Turn the SEL/PUSH EXEC dial to adjust the brightness.

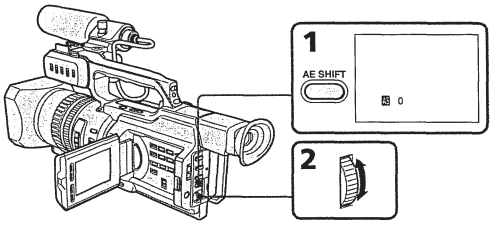

To deactivate AE shift

Set the AE shift value to 0, or press AE SHIFT.

When you adjust AE shift

The –4 to +4 indicator is displayed on the LCD screen or in the viewfinder. The number varies corresponding to the AE shift level.

Adjusting the white balance

White balance adjustment makes white subjects look white and allows more natural colour balance for camera recording. Normally, white balance is automatically adjusted. You can obtain better results by adjusting the white balance manually when lighting conditions change quickly or when recording outdoors: e.g., neon signs, fireworks.

(1) Set the AUTO LOCK selector to the center (auto lock release) position while the camcorder is in standby, recording, or memory mode.
(2) Press WHT BAL. The white balance indicator appears on the LCD screen or in the viewfinder.
(3) Turn the SEL/PUSH EXEC dial to select the appropriate white balance mode under the following conditions. As you turn the dial, the display changes as follows:
(One-push white balance) ⟷ (Outdoor) ⟷ (Indoor).

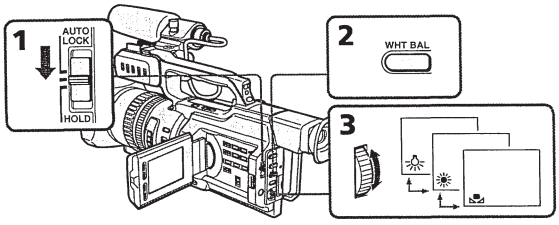

Indicator	Shooting conditions
	• Adjusting the white balance according to the light source. This operation is not available during recording. Follow the procedure described on the next page to adjust the setting again.
(Outdoor)	• Recording a sunset/sunrise, just after sunset, just before sunrise, neon signs, or fireworks • Under a colour matching fluorescent lamp
(Indoor)	• Lighting condition changes quickly • Too bright a place such as a photography studio • Under sodium lamps or mercury lamps

If you have selected in step 3

When you set the white balance to one-push white balance mode, the setting is locked and maintained even if lighting conditions change. You can achieve recording with natural colours without the image being affected by ambient light.
(With the indicator on the screen)

(1) Shoot a white object such as paper fully.
(2) Press the SEL/PUSH EXEC dial.

The indicator flashes quickly. When the white balance has been adjusted and stored in the memory, the indicator stops flashing. The setting will be maintained even if the battery is detached.

To return to automatic adjustment

Set the AUTO LOCK selector to AUTO LOCK or press WHT BAL. The white balance indicator disappears from the LCD or viewfinder screen.

Notes on white balance

- When you shoot with studio lighting or video lighting, use the (indoor) mode.
- When you shoot with fluorescent lighting, readjust the white balance using the (one-push white balance) mode , or use the automatic white balance mode. If you use the (indoor) mode, white balance may not be adjusted appropriately.

Shooting when lighting conditions have changed

- When lighting conditions have changed, readjust the white balance while the camcorder is in standby mode.
- In automatic white balance mode, point your camcorder at a white subject for about 10 seconds after setting the POWER switch to CAMERA to get a better adjustment when:
  – You detach the battery for replacement.
  – You bring your camcorder outdoors from the interior of a house, or vice versa.

If the indicator does not stop flashing after you press the SEL/PUSH EXEC dial

The white balance cannot be set. Use the automatic white balance mode.

Adjusting the recording level manually – Sound recording level

You can adjust the recording sound level. Use headphones to monitor the sound when you adjust it. You can adjust the channel 1 and channel 2 separately.

Selecting the channel to be adjusted manually

(1) Set the POWER switch to CAMERA or VCR.
(2) Press MENU to display the menu.
(3) Turn the SEL/PUSH EXEC dial to select [AUDIO], then press the dial.
(4) Turn the SEL/PUSH EXEC dial to select AUDIO SET, then press the dial.
(5) Turn the SEL/PUSH EXEC dial to select the desired item, then press the dial.
(6) Turn the SEL/PUSH EXEC dial to select the setting of the item, then press the dial.
(7) Press MENU to erase the menu display.

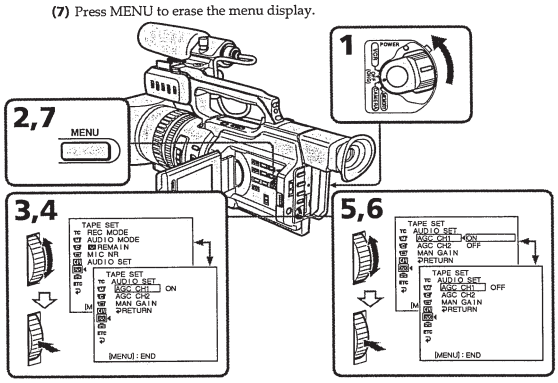

Items to be adjusted

Item	Setting	Meaning
AGC CH1	ON OFF	Switches the recording level adjustment of the channel 1 from automatic (ON) and manual (OFF).
AGC CH2[a)]	ON OFF	Switches the recording level adjustment of the channel 2 from automatic (ON) and manual (OFF).
MAN GAIN[a)b)]	SEPARATED LINKED	Sets the recording levels of channel 1 and channel 2 linked (LINKED) or separated (SEPARATED).

a) This is only available when connecting the external microphone to the INPUT2 connector.
b) LINKED is only available when both AGC CH1 and AGC CH2 are set to OFF.

To adjust the recording level automatically

Set AGC CH1 to ON when you automatically adjust the recording level of the channel 1. And set AGC CH2 to ON when you automatically adjust the recording level of the channel 2.

When the recording level is adjusted manually
The recording level indicator appears at the lower-right on the LCD screen or in the viewfinder.

The sound input through the AUDIO CH1/CH2 jacks or i DV IN/OUT jack
You cannot adjust the recording level.

Adjusting the recording level

(1) Press AUDIO LEVEL to display the recording level adjustment display in standby or recording mode.
(2) Turn the SEL/PUSH EXEC dial to adjust the recording level of the channel 1, then press the dial. The cursor moves to "CH2," and you can adjust the recording level of the channel 2.
(3) Turn the SEL/PUSH EXEC dial to adjust the recording level of the channel 2.

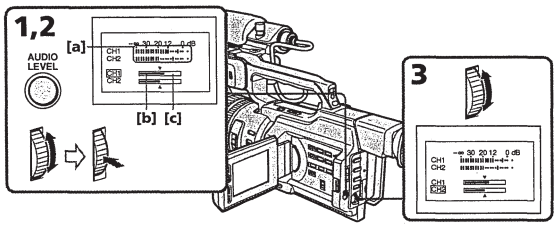

[a] Recording level meter
[b] Decreases the recording level
[c] Increases the recording level

To clear the recording level adjustment display

Press AUDIO LEVEL again.

When AGC CH1 or AGC CH2 is set to ON
You can see the recording level adjustment display, however, you cannot adjust the recording level of the channel that the item above is set to ON.

When MAN GAIN is set to LINKED
The recording level adjustment display is changed as follows.

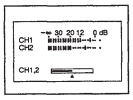

Connecting an optional external microphone

You can get your desired audio quality, connecting multiple microphones or an optional microphone to your camcorder.
(1) Loosen the microphone holder screw and open the cover.
(2) Detach the supplied microphone and unplug the cable from the camcorder.
(3) Connect the microphone (not supplied) to the INPUT1 or INPUT2 connector.
(4) Set the following settings.
When connecting a microphone
Set the INPUT LEVEL selector to MIC or MIC ATT. When set to MIC ATT, you can reduce the volume by about +20 dB. And set the +48V switch to ON if the microphone is powered through its cable.
When connecting audio equipment
Set the +48 V switch to OFF and set the INPUT LEVEL selector to LINE.
(5) Select the channel to be used, using the REC CH SELECT switch. When recording only on channel 1, set it to CH1. When recording both on channels 1 and channel 2, set it to CH1•CH2.

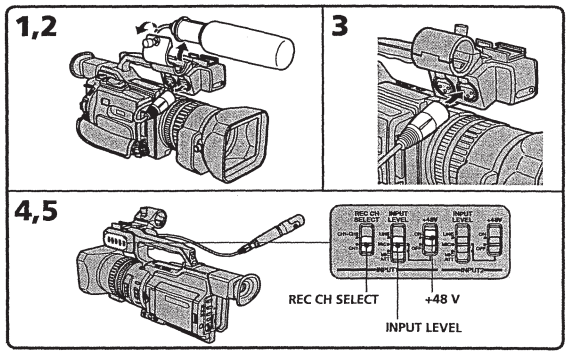

When the wind is blowing hard
Set CH1 or CH2 of WIND to ON in the menu settings according to the input (p. 104).

We recommend that you set MIC NR to OFF in the menu settings in the following cases:
• When you use the external microphone at a distance from the camcorder.
• When the REC CH SELECT switch is set to CH1 and you will not record any audio via the INPUT2 connector.
• When you set the INPUT LEVEL selector to LINE.

When you unplug the microphone plug
Unplug it while holding the PUSH button down.

Note
When you use an external microphone, make sure that the wind screen does not appear on the screen, using an underscan monitor.

Presetting the adjustment for picture quality – Custom preset

You can preset the camcorder to record the picture with the desired picture quality. When presetting, adjust the picture by shooting a subject and checking the picture displayed on a TV using the menu settings.

(1) Press CUSTOM PRESET to display the CUSTOM PRESET menu in standby or memory mode.
(2) Press the SEL/PUSH EXEC dial.
(3) Turn the SEL/PUSH EXEC dial to select SET, then press the dial.
(4) Turn the SEL/PUSH EXEC dial to select ON, then press the dial.
(5) Turn the SEL/PUSH EXEC dial to select the desired item, then press the dial.
(6) Turn the SEL/PUSH EXEC dial to adjust the selected item, then press the dial.
(7) Press CUSTOM PRESET.
The CUSTOM PRESET menu disappears and the indicator appears on the LCD screen or in the viewfinder.

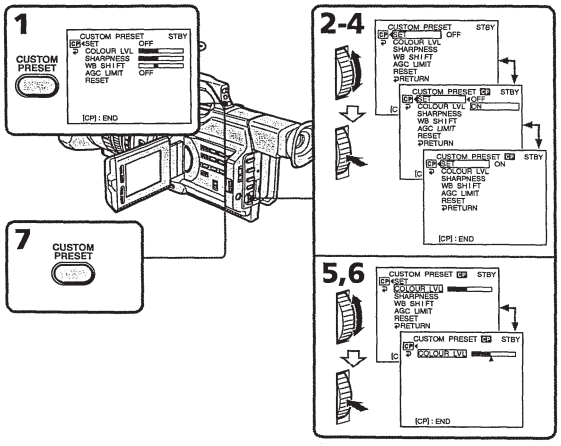

Presetting the adjustment for picture quality

Items to be adjusted

Item	Meaning	Adjustment value
COLOUR LVL	Colour intensity	Decreases colour intensity ←→ Increases colour intensity
SHARPNESS	Sharpness	Softer ←→ Sharper
WB SHIFT	White balance	Bluish ←→ Reddish
AGC LIMIT	Auto Gain-limit	6 dB/12 dB/OFF
RESET	Sets items above to the default settings.	

To cancel using the custom preset
Select OFF in step 4, then press the SEL/PUSH EXEC dial.

To return to the standard setting
Select OK from the RESET item in step 5, then press the SEL/PUSH EXEC dial. To cancel, select CANCEL, then press the SEL/PUSH EXEC dial.

To check the custom preset setting
Press CUSTOM PRESET while the camcorder is in standby, recording or memory mode.
The custom preset setting appears on the LCD screen or in the viewfinder.

About the AGC limit
When adjusting the gain manually, the level of the gain is up to 18 dB (OFF).

When you preset the desired picture quality in CAMERA or memory mode
The preset is only available in each mode you preset. If you want to use a preset both in CAMERA and memory modes, you have to preset in each mode.

Focusing manually

You can gain better results by manually adjusting the focus in the following cases:
- The autofocus mode is not effective when shooting
  - subjects through glass coated with water droplets
  - horizontal stripes
  - subjects with little contrast with backgrounds such as walls and sky
- When you want to change the focus from a subject in the foreground to a subject in the background
- Shooting a stationary subject when using a tripod

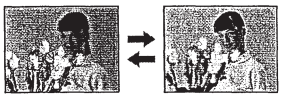

(1) Slide FOCUS down to MANUAL. The indicator appears on the LCD screen or in the viewfinder in recording, standby, or memory mode.
(2) Turn the focus ring to sharpen the focus.

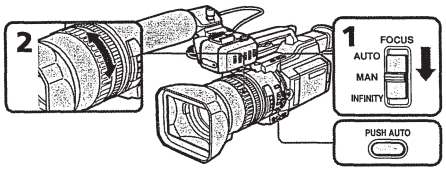

To return to the autofocus mode
Slide FOCUS up to AUTO to turn off the or indicator.

To focus in infinity
Slide FOCUS to INFINITY. The indicator appears on the LCD screen or in the viewfinder. This function is useful when the nearer subject is focused automatically, even though you want to focus on a faraway subject.

To shoot with auto focusing momentarily
Press PUSH AUTO.
The auto focus functions while you are pressing PUSH AUTO.
Use this button to focus on one subject and then another with smooth focusing.
When you release PUSH AUTO, manual focusing resumes.

To obtain the correct focus
First, focus on a subject manually with the zoom set toward the "T" (telephoto) side, then adjust the zoom by pressing the "W" side of the lever gradually.

When you shoot close to the subject
Focus at the end of the "W" (wide-angle) position.

changes as follows:
when recording a distant subject.
when the subject is too close to focus on.

Interval recording

You can make a time-lapse recording by setting the camcorder to automatically record and standby sequentially. You can achieve an excellent recording for flowering, emergence, etc., with this function.

Example

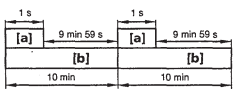

[a] Recording time
[b] Waiting time

(1) Press MENU to display the menu in standby mode.
(2) Turn the SEL/PUSH EXEC dial to select , then press the dial.
(3) Turn the SEL/PUSH EXEC dial to select INT. REC, then press the dial.
(4) Turn the SEL/PUSH EXEC dial to select SET, then press the dial.
(5) Set INTERVAL and REC TIME.
① Turn the SEL/PUSH EXEC dial to select INTERVAL, then press the dial.
② Turn the SEL/PUSH EXEC dial to select the desired interval time, then press the dial.
The time: 30SEC ←→ 1MIN ←→ 5MIN ←→ 10MIN.
③ Turn the SEL/PUSH EXEC dial to select REC TIME, then press the dial.
④ Turn the SEL/PUSH EXEC dial to select the desired recording time, then press the dial.
The time: 0.5SEC ←→ 1SEC ←→ 1.5SEC ←→ 2SEC.
⑤ Turn the SEL/PUSH EXEC dial to select RETURN, then press the dial.

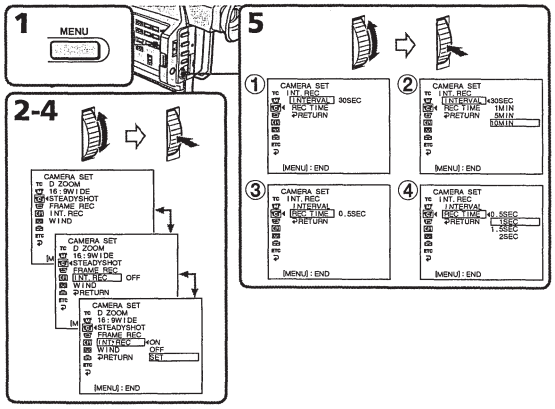

Interval recording

(6) Turn the SEL/PUSH EXEC dial to select ON, then press the dial.
(7) Press MENU to erase the menu display. The interval recording indicator flashes.
(8) Press START/STOP to start interval recording. The interval recording indicator lights up.

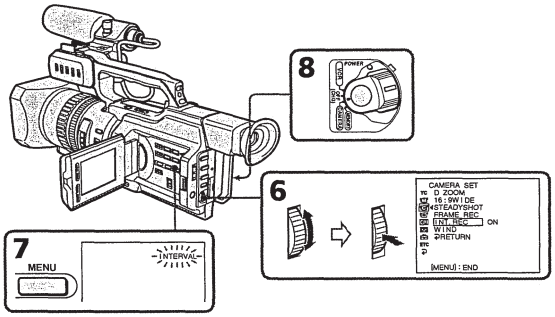

To cancel the interval recording
- Set INT. REC to OFF in the menu settings.
- Set the POWER switch to OFF (CHG), VCR or MEMORY.

To stop the interval recording momentarily and perform normal recording
Press START/STOP. You can perform normal recording only once. To cancel the normal recording, press START/STOP again.

Note on interval recording
You cannot do interval recording in memory mode.

On recording time
There may be a discrepancy in recording time of up to +/– 6 frames from the selected time.

Even if you press INDEX MARK during interval recording
You cannot mark an index.

Frame by frame recording – Cut recording

You can make a recording with a stop-motion animated effect using cut recording. To create this effect, alternately move the subject a little and make a cut recording. We recommend that you use a tripod, and operate the camcorder using the Remote Commander after step 6.
(1) Press MENU to display the menu in standby mode.
(2) Turn the SEL/PUSH EXEC dial to select ETC, then press the dial.
(3) Turn the SEL/PUSH EXEC dial to select FRAME REC, then press the dial.
(4) Turn the SEL/PUSH EXEC dial to select ON, then press the dial.
(5) Press MENU to erase the menu display.
The FRAME REC indicator lights up.
(6) Press START/STOP to start cut recording. The camcorder makes a recording for about six frames, and returns to recording standby.
(7) Move the subject, and repeat step 6.

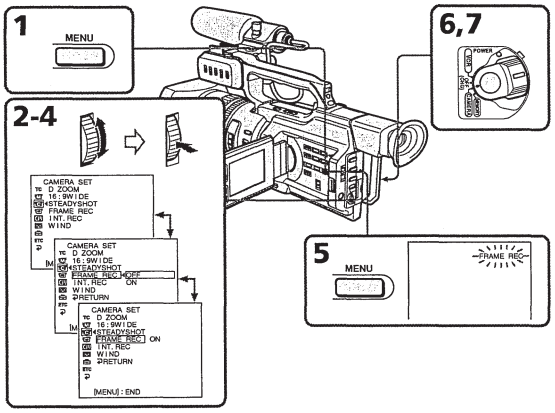

To cancel the cut recording
- Set FRAME REC to OFF in the menu settings.
- Set the POWER switch to OFF (CHG), VCR, or MEMORY.

Notes on cut recording
- The last recorded cut is longer than other cuts.
- The proper remaining tape time is not indicated if you use this function continuously.
- You cannot mark an index during cut recording.

Superimposing the date and time on a picture

You can superimpose the date/time indication directly on the picture, besides the date/time display as data code.

(1) Press MENU to display the menu in standby mode.
(2) Turn the SEL/PUSH EXEC dial to select ETC, then press the dial.
(3) Turn the SEL/PUSH EXEC dial to select DATE REC, then press the dial.
(4) Turn the SEL/PUSH EXEC dial to select ON, then press the dial.
(5) Press MENU to erase the menu display.
The date/time indicator displayed on the LCD screen or in the viewfinder.

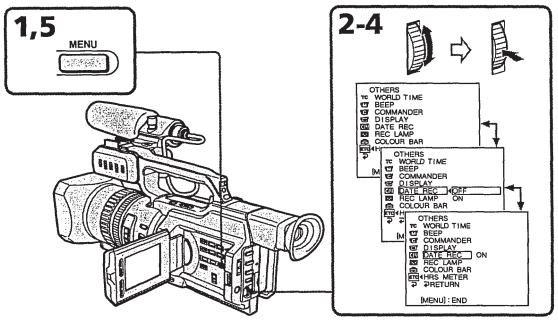

To cancel superimposing the date/time indication
Select OFF in step 4, then press the SEL/PUSH EXEC dial.

Note
You cannot erase the recorded date/time data on the picture. Before using this function, make sure that you set the date and time correctly.

Marking an Index

If you mark an index at the scene you want to search for, you can easily search for the scene later (p. 64).

In recording mode [a]:
Press INDEX MARK.
The "INDEX MARK" indicator appears on the LCD screen or in the viewfinder for seven seconds and the index is marked after the indicator disappears.
In standby mode [b]:
Press INDEX MARK.
The "INDEX STBY" indicator appears on the LCD screen or in the viewfinder. And when you press START/STOP to start recording, the "INDEX MARK" indicator appears on the LCD screen or in the viewfinder for seven seconds. The index is marked after the indicator disappears.
The index signal is marked on the 11th frame from the recording start point (about 0.3 sec).
You can mark an index in VCR mode (p. 82).

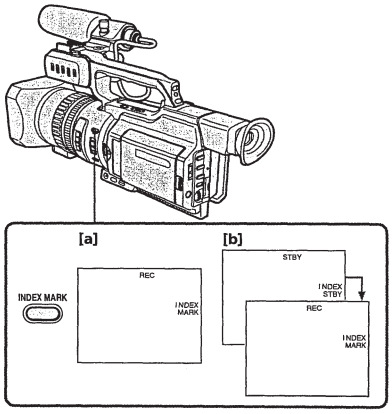

To cancel index marking
Press INDEX MARK again in standby mode.

Note on the index
You cannot mark an index after recording.

Searching for a recording by index – Index search

You can automatically search for the point where an index is marked and start playback from that point **(Index search)**. Use a tape with cassette memory for convenience. Use the Remote Commander for this operation.
Use this function to check where indexes are marked or to edit the tape at each sequence where the index is marked.

Searching for the index point using cassette memory

You can use this function only when playing back a tape with cassette memory (p. 142).

(1) Set the POWER switch to VCR.
(2) Set CM SEARCH in CM to ON in the menu settings (p. 104). The default setting is ON.
(3) Press SEARCH MODE on the Remote Commander repeatedly, until the index search indicator appears.
The indicator changes as follows:
INDEX SEARCH → TITLE SEARCH → DATE SEARCH → PHOTO SEARCH → PHOTO SCAN → no indicator
(4) Press ⏮ or ⏭ on the Remote Commander to select the index point for playback.
Your camcorder automatically starts playing back at the selected index point.

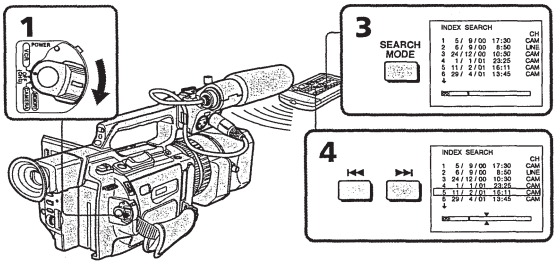

To stop searching
Press ■.

Searching for a recording by index – Index search

In the ⌂ mark
• The bar in the ⌂ mark indicates the present point on the tape.
• The ⧗ mark in the ⌂ indicates the actual point you are trying to search for.

If a tape has a blank portion between recorded portions
The index search function may not work correctly.

If you mark an index onto an external input signal
"LINE" appears in the CH column.

Searching for the index point without using cassette memory

(1) Set the POWER switch to VCR.
(2) Set CM SEARCH in CM to OFF in the menu settings (p. 104). If using a tape without cassette memory, skip this step.
(3) Press SEARCH MODE on the Remote Commander repeatedly, until the index search indicator appears.
The indicator changes as follows:
INDEX SEARCH → DATE SEARCH → PHOTO SEARCH → PHOTO SCAN → no indicator
(4) Press ⏮ on the Remote Commander to search for the previous index point or press ⏭ on the Remote Commander to search for the next index point.
Your camcorder automatically starts playback at the selected index point. Each time you press ⏮ or ⏭, your camcorder searches for the previous or next index point.

To stop searching
Press ■.

Searching the boundaries of recorded tape by title – Title search

CM only

If you use a tape with cassette memory, you can search for the boundaries of recorded tape by title **(Title search)** (p. 142). Use the Remote Commander for this operation.

(1) Set the POWER switch to VCR.
(2) Set CM SEARCH in CM to ON in the menu settings (p. 104). The default setting is ON.
(3) Press SEARCH MODE on the Remote Commander repeatedly, until the title search indicator appears.
The indicator changes as follows:
INDEX SEARCH → TITLE SEARCH → DATE SEARCH → PHOTO SEARCH → PHOTO SCAN → no indicator
(4) Press ⏮ or ⏭ on the Remote Commander to select the title for playback.
Your camcorder automatically starts playback of the scene having the title that you selected.

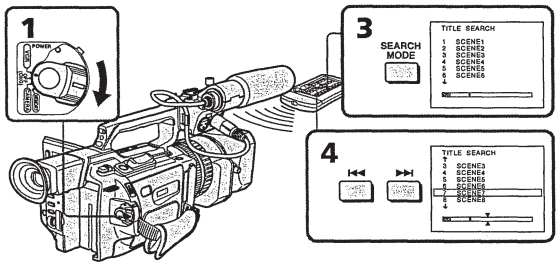

To stop searching
Press ■.

If you use a tape without cassette memory
You cannot superimpose or search for a title.

In the ⌂ mark
• The bar in the ⌂ mark indicates the present point on the tape.
• The ⧗ mark in the ⌂ indicates the actual point you are trying to search for.

If a tape has a blank portion between recorded portions
The title search function may not work correctly.

Searching a recording by date – Date search

You can automatically search for the point where the recording date changes and start playback from that point **(Date search)**. Use a tape with cassette memory for convenience. Use the Remote Commander for this operation.
Use this function to check where recording dates change or to edit the tape at each recording date.

Searching for the date using cassette memory

You can use this function only when playing back a tape with cassette memory (p. 142).

(1) Set the POWER switch to VCR.
(2) Set CM SEARCH in CM to ON in the menu settings (p. 104). The default setting is ON.
(3) Press SEARCH MODE on the Remote Commander repeatedly, until the date search indicator appears.
The indicator changes as follows:
INDEX SEARCH → TITLE SEARCH → DATE SEARCH → PHOTO SEARCH → PHOTO SCAN → no indicator
(4) Press ⏮ or ⏭ on the Remote Commander to select the date for playback.
Your camcorder automatically starts playback at the beginning of the selected date.

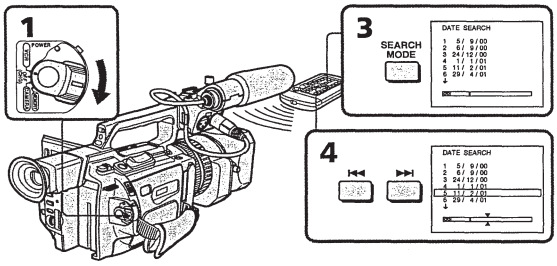

To stop searching
Press ■.

Searching a recording by date – Date search

Note
If one day's recording is less than two minutes, your camcorder may not accurately find the point where the recording date changes.

In the [00] mark
- The bar in the [00] mark indicates the present point on the tape.
- The ⧗ mark in the [00] indicates the actual point you are trying to search.

If a tape has a blank portion between recorded portions
The date search function may not work correctly.

Searching for the date without using cassette memory

(1) Set the POWER switch to VCR.
(2) Set CM SEARCH in [CM] to OFF in the menu settings (p. 104). If using a tape without cassette memory, skip this step.
(3) Press SEARCH MODE on the Remote Commander repeatedly, until the date search indicator appears.
The indicator changes as follows:
INDEX SEARCH → DATE SEARCH → PHOTO SEARCH → PHOTO SCAN → no indicator
(4) Press ⏮ on the Remote Commander to search for the previous date or press ⏭ on the Remote Commander to search for the next date. Your camcorder automatically starts playback at the point where the date changes. Each time you press ⏮ or ⏭, your camcorder searches for the previous or next date.

To stop searching
Press ■.

Searching for a photo – Photo search/ Photo scan

You can search for a still picture you have recorded on a tape **(photo search)**.
You can also search for still pictures one after another and display each picture for five seconds automatically regardless of cassette memory **(photo scan)**. Use the Remote Commander for these operations.
Use this function to check or edit still pictures.

Searching for a photo using cassette memory

You can use this function only when playing back a tape with cassette memory (p. 142).
(1) Set the POWER switch to VCR.
(2) Set CM SEARCH in [CM] to ON in the menu settings (p. 104). Default setting is ON.
(3) Press SEARCH MODE on the Remote Commander repeatedly, until the photo search indicator appears.
The indicator changes as follows:
INDEX SEARCH → TITLE SEARCH → DATE SEARCH → PHOTO SEARCH → PHOTO SCAN → no indicator
(4) Press ⏮ or ⏭ on the Remote Commander to select the date for playback. Your camcorder automatically starts playback of the photo having the date that you selected.

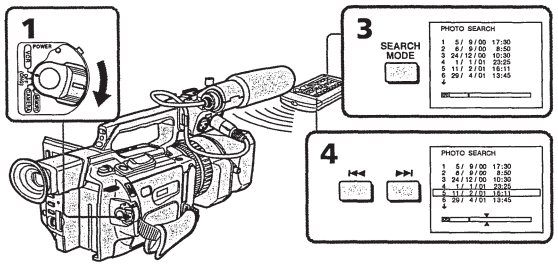

To stop searching
Press ■.

In the [00] mark
- The bar in the [00] mark indicates the present point on the tape.
- The ⧗ mark in the [00] indicates the actual point you are trying to search for.

If a tape has a blank portion between recorded portions
The photo search function may not work correctly.

Searching for a photo – Photo search/Photo scan

Searching for a photo without using cassette memory

(1) Set the POWER switch to VCR.
(2) Set CM SEARCH in [CM] to OFF in the menu settings (p. 104).
(3) Press SEARCH MODE on the Remote Commander repeatedly, until the photo search indicator appears.
The indicator changes as follows:
INDEX SEARCH → DATE SEARCH → PHOTO SEARCH → PHOTO SCAN → no indicator
(4) Press ⏮ or ⏭ on the Remote Commander to select a photo for playback. Each time you press ⏮ or ⏭, your camcorder searches for the previous or next photo.
Your camcorder automatically starts playback of the photo.

To stop searching
Press ■.

Scanning photo

(1) Set the POWER switch to VCR.
(2) Press SEARCH MODE on the Remote Commander repeatedly, until the photo scan indicator appears.
The indicator changes as follows:
INDEX SEARCH → TITLE SEARCH → DATE SEARCH → PHOTO SEARCH → PHOTO SCAN → no indicator
(3) Press ⏮ or ⏭ on the Remote Commander.
Each photo is played back for about five seconds automatically.

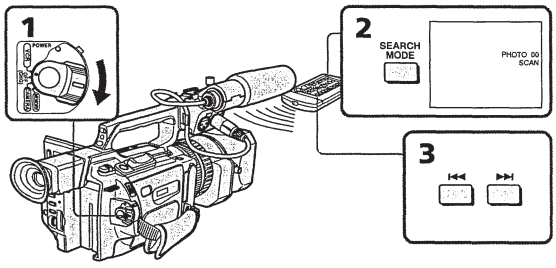

To stop scanning
Press ■.

Playing back a tape with digital effects

During playback, you can process a scene using the digital effect functions: STILL, FLASH, LUMI. and TRAIL.
(1) In playback or playback pause mode, press DIGITAL EFFECT and turn the SEL/PUSH EXEC dial until the desired digital effect indicator (STILL, FLASH, LUMI. or TRAIL) flashes.
(2) Press the SEL/PUSH EXEC dial.
The digital effect indicator lights up and the bars appear. In STILL or LUMI. mode, the picture is captured and is stored in memory as a still picture at the time you press the SEL/PUSH EXEC dial.
(3) Turn the SEL/PUSH EXEC dial to adjust the effect.
For details of each digital effect function, see page 39.

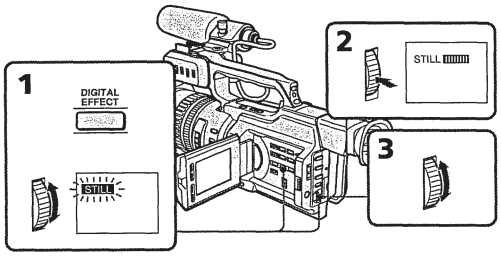

To cancel the digital effect function
Press DIGITAL EFFECT so that the indicator disappears.

Notes
- You cannot process a picture using the digital effect function that is input from other equipment.
- To record pictures that you have processed using the digital effect function, record the pictures on the VCR, using your camcorder as a player.

Pictures processed by the digital effect function
Pictures processed by the digital effect function are not output through the i DV IN/OUT jack.

When you set the POWER switch to OFF (CHG) or stop playing back
The digital effect function will be automatically cancelled.

Dubbing a tape

Using the A/V connecting cable

Connect your camcorder to the VCR using the A/V connecting cable supplied with your camcorder. Recording quality by analog input, however, is not satisfying for professional use.

Before a dubbing
Set DISPLAY to LCD in the menu settings. (Default setting is LCD.)

Set the input selector on the VCR to LINE, if available.
(1) Insert a blank tape (or a tape you want to record over) into the VCR, and insert the recorded tape into your camcorder.
(2) Set the input selector on the VCR to LINE. For details, refer to the operating instructions of the VCR.
(3) Set the POWER switch to VCR.
(4) Play back the recorded tape on your camcorder.
(5) Start recording on the VCR. For details, refer to the operating instructions of the VCR.

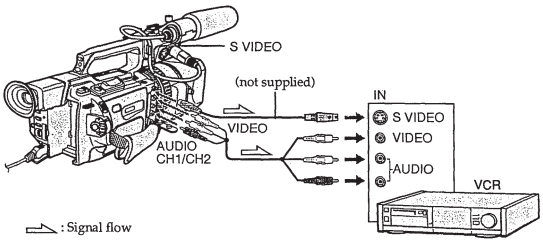

When you have finished dubbing the tape

Press ■ on both your camcorder and the VCR.

Be sure to clear the indicators from the screen
If they are displayed, press the following buttons so as not to record the indicators on the dubbed tape:
• The DISPLAY button
• The DATA CODE button
• The SEARCH MODE button on the Remote Commander

You can edit on VCRs that support the following systems
8 mm, Hi8 Hi8, Digital8, VHS VHS, S-VHS, VHSC VHSC, S-VHSC, Betamax, ED Beta ED Betamax, DVCAM DVCAM, mini DV or DV DV

If your VCR is a monaural type
Connect with a VCR using the audio cable (monaural ←→ stereo) (not supplied).

Connect using an S video cable (not supplied) to obtain high-quality pictures
With this connection, you do not need to connect the yellow (video) plug of the A/V connecting cable.
Connect an S video cable (not supplied) to the S video jacks of both your camcorder and the VCR.
This connection produces higher quality DVCAM/DV format pictures.

Note
You can edit precisely by connecting a LANC cable (not supplied) to this camcorder and other video equipment having a fine synchro-editing function, using this camcorder as a player.

Using an i.LINK cable (DV connecting cable)

Simply connect the i.LINK cable (DV connecting cable) (not supplied) to i DV IN/OUT and to DV IN/OUT of the DVCAM/DV products. With a digital-to-digital connection, video and audio signals are transmitted in digital form for high-quality editing. You cannot dub the titles, display indicators or the contents of cassette memory.
(1) Insert a blank tape (or a tape you want to record over) into the VCR, and insert the recorded tape into your camcorder.
(2) Set the input selector on the VCR to the DV input position if the VCR is equipped with an input selector. For details, refer to the operating instructions of the VCR.
(3) Set the POWER switch to VCR.
(4) Play back the recorded tape on your camcorder.
(5) Start recording on the VCR.

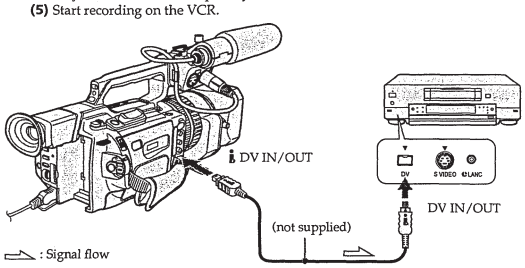

When you have finished dubbing a tape

Press ■ on both your camcorder and the VCR.

You can connect one VCR only using the i.LINK cable (DV connecting cable)

Pictures processed by the digital effect function
Pictures processed by the digital effect function are not output through the i DV IN/OUT jack.

If you record a playback pause picture with the i DV IN/OUT jack
The recorded picture becomes rough. And when you play back the picture using other video equipment, the picture may jitter.

Dubbing only desired scenes – Digital program editing

You can duplicate selected scenes (programs) for editing onto a tape without operating the VCR. Scenes can be selected by frame.
To use this function, an i.LINK cable (DV connecting cable) (not supplied) will be required.

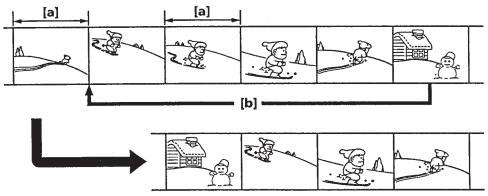

[a] Undesired frame
[b] Moves the scene

Before operating the digital program editing

Preparation 1 Connecting the VCR. (p. 73)
Preparation 2 Adjusting the synchronization of the VCR (p. 75).

When you dub using the same VCR again, you can skip Preparation 2.

Using the digital program editing function

Operation 1 Making programs. (p. 77)
Operation 2 Performing a digital program editing (Dubbing a tape). (p. 79)

Notes
• You cannot dub the titles, display indicators, or the contents of cassette memory.
• If you start recording from the very beginning of the tape, the first few seconds of the tape may not record properly. Be sure to allow about 10 seconds' lead before starting the recording.

Preparation 1: Connecting the VCR

Connect your camcorder and the VCR as shown on page 73.

Preparation 2: Adjusting the synchronization of the VCR

You can adjust the synchronization of your camcorder and the VCR.
Remove the cassette from the camcorder beforehand. We recommend that you prepare a pen and paper for notes.
When you connect to a Sony VCR using an i.LINK cable (DV connecting cable), the setup below is not necessary.

(1) Insert a recordable tape into the VCR.
(2) Set the POWER switch to VCR.
(3) Press MENU to display the menu.
(4) Turn the SEL/PUSH EXEC dial to select ETC, then press the dial.
(5) Turn the SEL/PUSH EXEC dial to select EDIT SET, then press the dial.
(6) Turn the SEL/PUSH EXEC dial to select ADJ TEST, then press the dial.
(7) Turn the SEL/PUSH EXEC dial to select EXECUTE, then press the dial.
CUT-IN and CUT-OUT are recorded on an image for five times each to calculate the numerical values for adjusting the synchronicity.
The EXECUTING indicator flashes on the LCD screen or in the viewfinder. When finished, the indicator changes to COMPLETE.
(8) Rewind the tape in the VCR, then start slow playback.
Take a note of the opening numerical value of each CUT-IN and the closing numerical value of each CUT-OUT.
(9) Calculate the average of all the opening numerical values of each CUT-IN, and the average of all the closing numerical values of each CUT-OUT.

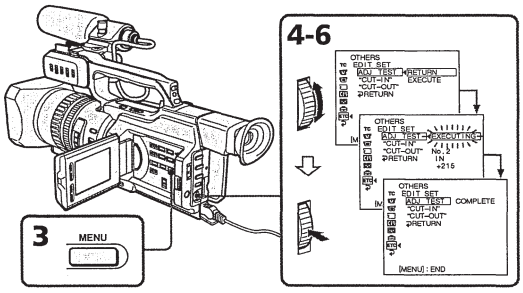

(10) Turn the SEL/PUSH EXEC dial to select "CUT-IN," then press the dial.
(11) Turn the SEL/PUSH EXEC dial to select the average numerical value of CUT-IN, then press the dial.
The calculated start position for recording is set.
(12) Turn the SEL/PUSH EXEC dial to select "CUT-OUT," then press the dial.
(13) Turn the SEL/PUSH EXEC dial to select the average numerical value of CUT-OUT, then press the dial.
The calculated stop position for recording is set.
(14) Turn the SEL/PUSH EXEC dial to select ⮐RETURN, then press the dial.

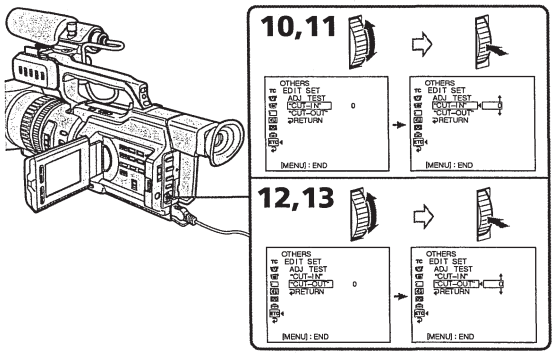

Errors in editing
If you connect your camcorder to Sony equipment with the DV jack, the range of errors is within +/– 5 frames.
The range may become wider in the following conditions:
• The interval between CUT-IN and CUT-OUT is less than five seconds (p. 77).
• CUT-IN or CUT-OUT is set at the beginning of the tape.

Operation 1: Making Programs

(1) Insert the tape for playback into your camcorder, and insert a tape for recording into the VCR.
(2) Press MENU to display the menu.
(3) Turn the SEL/PUSH EXEC dial to select ETC, then press the dial.
(4) Turn the SEL/PUSH EXEC dial to select VIDEO EDIT, then press the dial.
(5) Search for the beginning of the first scene you want to insert using the video control buttons, then pause playback (p. 29).

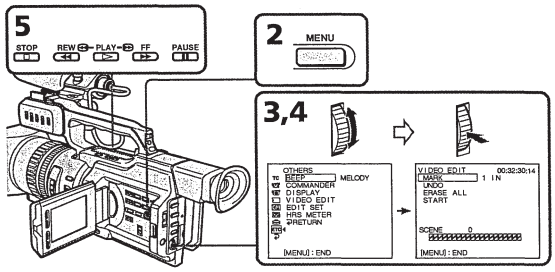

(6) Press the SEL/PUSH EXEC dial, or MARK on the Remote Commander.
The CUT-IN point of the first program is set, and the top part of the program mark changes to light blue.
(7) Search for the end of the first scene you want to insert using the video operating buttons, then pause playback (p. 29).
(8) Press the SEL/PUSH EXEC dial, or MARK on the Remote Commander.
The CUT-OUT point of the first program is set, then the bottom part of the program mark changes to light blue.
(9) Repeat steps 5 to 8, then set PROGRAM.
When the program is set, the program mark changes to light blue.
You can set a maximum of 20 programs.

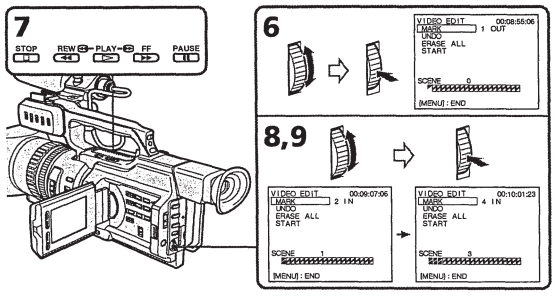

On a blank portion of the tape
You cannot set CUT-IN or CUT-OUT on a blank portion of the tape.

Erasing the last program

To change the end of the last program, delete the CUT-OUT mark.
To erase the whole program, delete both the CUT-IN and CUT-OUT marks.

(1) Turn the SEL/PUSH EXEC dial to select UNDO, then press the dial.
(2) Turn the SEL/PUSH EXEC dial to select EXECUTE, then press the dial.
The last set program mark flashes, then the setting is cancelled.

To cancel erasing
Select RETURN in step 2, then press the SEL/PUSH EXEC dial.

Erasing all programs

(1) Select VIDEO EDIT in the menu settings. Turn the SEL/PUSH EXEC dial to select ERASE ALL, then press the dial.
(2) Turn the SEL/PUSH EXEC dial to select EXECUTE, then press the dial.
All the program marks flash, then the settings are cancelled.

To cancel erasing all programs
Select RETURN in step 2, then press the SEL/PUSH EXEC dial.

To cancel a program you have set
Press MENU.
The program is stored in memory until the tape is ejected.

Operation 2: Performing a digital program editing (Dubbing a tape)

Make sure your camcorder and VCR are connected. When you use a video camera recorder, set its POWER switch to VCR.

(1) Select VIDEO EDIT in the menu settings. Turn the SEL/PUSH EXEC dial to select START, then press the dial.
(2) Turn the SEL/PUSH EXEC dial to select EXECUTE, then press the dial.
Search for the beginning of the first program, then start dubbing.
The EXECUTING indicator flashes.
The SEARCH indicator appears during search, and the EDIT indicator appears during edit on the LCD screen or in the viewfinder.
The PROGRAM indicator lights up after dubbing is complete.
When the dubbing ends, your camcorder and the VCR automatically stop.

To stop dubbing
Press ■ on this camcorder or on the Remote Commander.

To end the digital program editing function
Your camcorder stops when the dubbing is complete. Then the display returns to VIDEO EDIT in the menu settings.
Press MENU to end the video program editing function.

You cannot record on the VCR when:
• The cassette is not inserted.
• The tape has run out.
• The write-protect tab is set to the protect position.

NOT READY appears on the LCD screen when:
• The program to operate the digital program editing has not been made.
• An i.LINK cable (DV connecting cable) is not connected.
• The power of the connected VCR is not turned on.

Using with an analog video unit and a PC – Signal convert function

You can convert the analog input signal to the digital signal and output it from the DV IN/OUT jack on this camcorder. You can capture images and sound from an analog video unit connecting a PC which has the i.LINK (DV) jack to your camcorder.

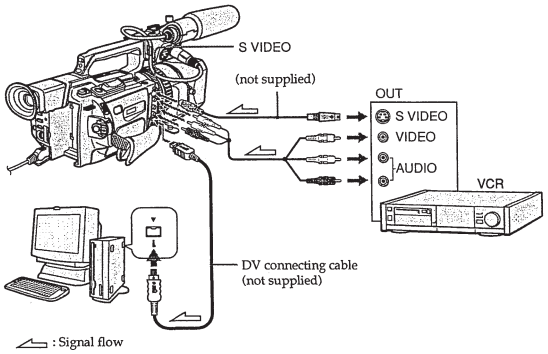

(1) Set the POWER switch to VCR.
(2) Press MENU to display the menu.
(3) Turn the SEL/PUSH EXEC dial to select [V], then press the dial.
(4) Turn the SEL/PUSH EXEC dial to select A/V → DV OUT, then press the dial.
(5) Turn the SEL/PUSH EXEC dial to select ON, then press the dial.
(6) Press MENU to erase the menu display.
(7) Start playback on the analog video unit slightly ahead of the point from which you want to start capturing images.
(8) Start capturing procedures on your PC. The operation procedures depend on your PC and the software which you use.
For details on how to capture images, refer to the instruction manual of your PC and your software.

After capturing images and sound
Stop capturing procedures on your PC, and stop the playback on the analog video unit.

Notes
- When you edit the captured image and sound from the analog video unit by a PC, you need to install an appropriate software which can exchange video signals between the camcorder and a PC.
- Depending on the condition of the analog video signals, the PC may not be able to output the images correctly when you convert analog video signals into digital video signals via your camcorder. Depending on the analog video unit, the image may contain noise or incorrect colours.
- The camcorder cannot output the digital signal when you input the analog signal that includes a copyright protection signal.

Recording video or TV programs

Using the A/V connecting cable
You can record a tape from another VCR or a TV program from a TV that has video/audio outputs. Use your camcorder as a recorder.
(1) Insert a blank tape (or a tape you want to record over) into your camcorder. If you want to record a tape from the VCR, insert a recorded tape into the VCR.
(2) Set the POWER switch to VCR on your camcorder.
(3) Set DISPLAY in [ETC] to LCD in the menu settings (p. 104).
(4) Press MENU to erase the menu display.
(5) Press ● REC and the button on its right simultaneously on your camcorder, then immediately press ❚❚ on your camcorder.
(6) Press ► on the VCR to start playback if you record a tape from a VCR. Select a TV program if you record from a TV. The picture from a TV or VCR appears on the LCD screen or in the viewfinder.
(7) Press ❚❚ on your camcorder at the scene from which you want to start recording.

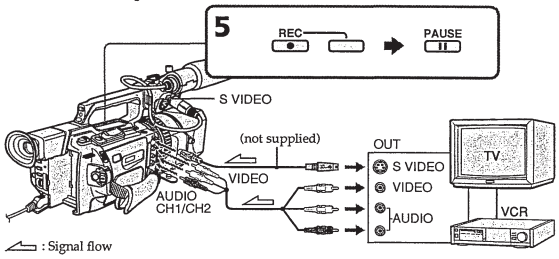

When you have finished recording
Press ■ on both your camcorder and the VCR.

Using the Remote Commander
In step 5, press ● REC and MARK simultaneously, then immediately press ❚❚. And in step 7, press ❚❚ at the scene from which you want to start recording.

If your VCR is a monaural type
Connect with a VCR using the audio cable (monaural ←→ stereo) (not supplied).

Connect using an S video cable (not supplied) to obtain high-quality pictures
With this connection, you do not need to connect the yellow (video) plug of the A/V connecting cable.
Connect an S video cable (not supplied) to the S video jacks of both your camcorder and the VCR.
This connection produces higher quality DVCAM/DV format pictures.

If you do various playbacks on the VCR during recording
The recorded picture may be blurred.

On the commander mode
Your camcorder works in the commander mode, VTR 2. Commander modes 1, 2 and 3 are used to distinguish your camcorder from other Sony VCRs to avoid remote control misoperation. If you use another Sony VCR in the commander mode VTR 2, we recommend changing the commander mode or covering the sensor of the VCR with black paper.

On index signal
The index is automatically marked on a tape when you start recording. If you mark the index using the INDEX MARK button during recording, "LINE" appears in the CH column on the INDEX SEARCH screen, and the index is recorded on cassette memory.

Using an i.LINK cable (DV connecting cable)
Simply connect the i.LINK cable (DV connecting cable) (not supplied) to i DV IN/OUT and to DV IN/OUT of the DV products. With digital-to-digital connection, video and audio signals are transmitted in digital form for high-quality editing.
(1) Insert a blank tape (or a tape you want to record over) into your camcorder, and insert the recorded tape into the VCR.
(2) Set the POWER switch to VCR.
(3) Set DISPLAY in [ETC] to LCD in the menu settings (p. 104).
(4) Press MENU to erase the menu display.
(5) Press ● REC and the button on its right simultaneously on your camcorder, then immediately press ❚❚ on your camcorder.
(6) Press ► on the VCR to start playback. The picture to be recorded appears on the LCD screen or in the viewfinder.
(7) Press ❚❚ on your camcorder at the scene from which you want to start recording.

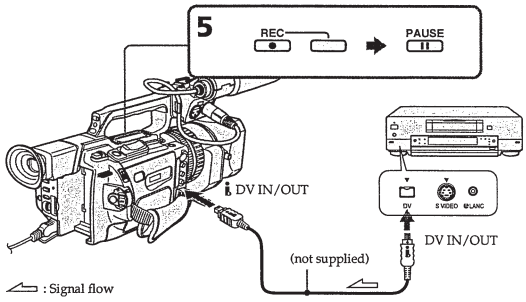

When you have finished recording
Press ■ on both your camcorder and the VCR.

Using the Remote Commander
In step 5, press ● REC and MARK simultaneously, then immediately press ❚❚. And in step 7, press ❚❚ at the scene from which you want to start recording.

Recording video or TV programs

You can connect only one VCR using the i.LINK cable (DV connecting cable)

When you dub a picture in digital form
The colour of the display may be uneven. However this does not affect the dubbed picture.

If you record a still picture in playback pause mode via the i DV IN/OUT jack
The recorded picture becomes rough. And when you play back the picture using your camcorder, the picture may jitter.

Before recording
Press DISPLAY and make sure that the DV IN indicator appears on the LCD screen or in the viewfinder. The DV IN indicator may appear on both pieces of equipment.

Audio dubbing

You can record an audio sound to add to the original sound on a tape by connecting audio equipment or a microphone. If you connect audio equipment, you can add sound to your recorded tape by specifying the starting and ending points. The original sound will not be erased. You can also use the Remote Commander for this operation.

The relationship between audio input and channels on which a dubbed sound will be recorded

The relationship between audio input and channels on which a dubbed sound will be recorded is as follows:

Audio input through	The position of the REC CH SELECT switch	Which audio input will be recorded on	
		Channel 3	Channel 4
AUDIO CH1/CH2	–	AUDIO CH1	AUDIO CH2
AUDIO CH1	–	AUDIO CH1	–
AUDIO CH2	–	–	AUDIO CH2
INPUT1/2	CH1	INPUT1	INPUT2
	CH1•CH2	INPUT1	INPUT1
INPUT1	CH1	INPUT1	–
	CH1•CH2	INPUT1	INPUT1
INPUT2	CH1	–	INPUT2
	CH1•CH2	–	–

Dubbing with the INPUT1/INPUT2 connectors

For details on setup of the INPUT1/INPUT2 connectors, see "Connecting an optional external microphone" on page 55.

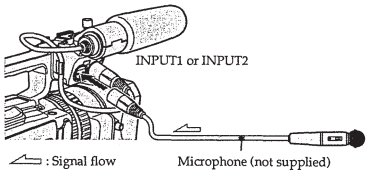

You can check the picture on TV by connecting with the video jack. You cannot monitor the additional sound by the speaker. Use the headphones jack.

Audio dubbing

Dubbing with the AUDIO CH1/CH2 jacks

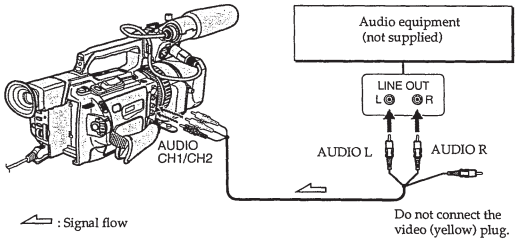

Notes
- You can dub a sound only on a tape recorded in Fs32K mode of the DVCAM format.
- When dubbing with the INPUT1/INPUT2 connectors, you can check the recorded picture on the LCD screen, in the viewfinder, or on the screen of equipment connected with the VIDEO jack, and you can check the recorded sound by using headphones.
- When dubbing with the AUDIO CH1/CH2 jacks, you can check the recorded picture on the LCD screen or in the viewfinder, and you can check the recorded sound by using a headphones.
- You can adjust the balance of the new sound and original sound using AUDIO MIX in the menu settings. You can monitor the sound during audio dubbing.

Audio dubbing

Adding an audio sound on a recorded tape

(1) Insert the recorded tape into your camcorder.
(2) Set the POWER switch to VCR on your camcorder.
(3) Locate the recording start point by pressing ►. Then press ❚❚ at the point where you want to start recording to set your camcorder to the playback pause mode.
(4) Press ⊖ AUDIO DUB. The green ⊖❚❚ indicator appears on the LCD screen or in the viewfinder.
(5) Press ❚❚ and start playing back the audio you want to record at the same time. The new sound is recorded in channels 3/4 during playback.
(6) Press ■ at the point where you want to stop recording.

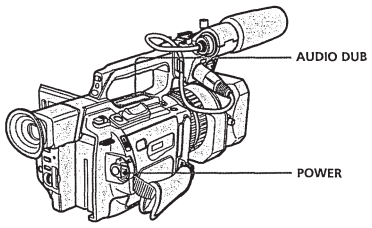

Monitoring the new recorded sound

To play back the sound
Adjust the balance between the channels 1/2 (CH1/2) and the channels 3/4 (CH3/4) by selecting AUDIO MIX in the menu settings (p. 104).

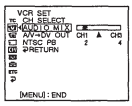

The default setting is for original sound only.
If you set the audio balance beforehand, you can monitor both the original sound and dubbed sound during the dubbing.

Audio dubbing

Notes
- New sound cannot be recorded on a tape already recorded in Fs48K mode (p. 109).
- New sound cannot be recorded on a tape already recorded in the DV format.
- You cannot add audio with the i, DV IN/OUT jack.

If you make all the connections
The audio input to be recorded will take precedence over others in the following order.
- AUDIO CH1/CH2 jacks
- INPUT1/INPUT2 connectors

If an i.LINK cable (DV connecting cable) (not supplied) is connected to your camcorder
You cannot add sound to a recorded tape.

If you set the write-protect tab of the tape to lock
You cannot record on the tape. Slide the write-protect tab to release the write protection.

We recommend that you add new sound on a tape recorded with your camcorder
If you add new sound on a tape recorded with another camcorder (including an other DSR-PD150P), the sound quality may deteriorate.

On blank portions
You cannot add an audio.

When dubbing through the INPUT1/INPUT2 connectors
You can adjust the recording level manually (p. 52).

Setting time values

The camcorder uses two types of time values: time code values and user bits.
The time value is displayed on the LCD screen, in the viewfinder, or on the display window.
The user bits are convenient when using multiple cameras at the same event.
When you record the picture, time code data will be recorded automatically.

Setting the time code value

This section describes the steps for setting time code recording methods for particular shooting conditions and setting initial values.

(1) Set the POWER switch to VCR or CAMERA.
(2) Press MENU to display the menu.
(3) Turn the SEL/PUSH EXEC dial to select TC, then press the dial.
(4) Turn the SEL/PUSH EXEC dial to select TC MAKE, then press the dial.
(5) Turn the SEL/PUSH EXEC dial to select PRESET, then press the dial.
(6) Turn the SEL/PUSH EXEC dial to select TC PRESET, then press the dial.
(7) Turn the SEL/PUSH EXEC dial to select PRESET, then press the dial.
(8) Set up the first two digits. Turn the SEL/PUSH EXEC dial to select the number, then press the dial. The time code is set between 00:00:00:00 and 23:59:59:24.
(9) Repeat step 8 to set up the other digits.

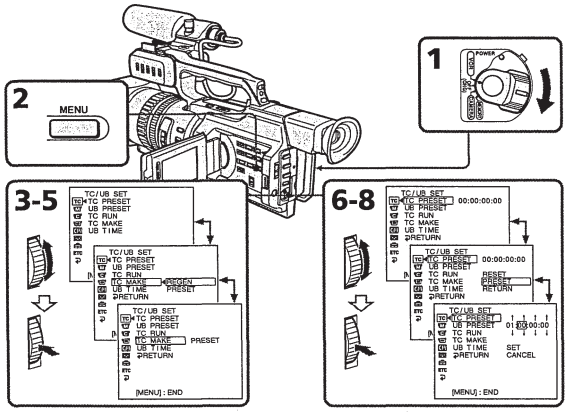

Setting time values

(10) Turn the SEL/PUSH EXEC dial to select SET, then press the dial.
(11) Turn the SEL/PUSH EXEC dial to select TC RUN, then press the dial.
(12) Turn the SEL/PUSH EXEC dial to select the desired running mode, then press the dial.
REC RUN: Time code value advances only while recording. When making the time code continuous at back space editing, select this setting.
FREE RUN: Time code advances freely regardless of the camcorder's current operation mode.
For more information on the running mode, see "Making the time code continuous at back space editing" on page 91.

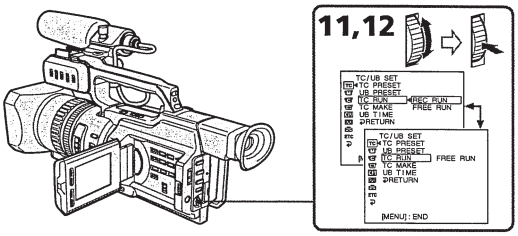

To cancel the time code setting
Select CANCEL in step 10, then press the SEL/PUSH EXEC dial.

To reset the time code
Select RESET in step 7, then press the SEL/PUSH EXEC dial.

Setting time values

Making the time code continuous at back space editing

Set TC MAKE to REGEN in the menu settings to make the time code continuous when the recording has been interrupted or when the cassette tape has been removed from the camcorder between shootings.
When the camcorder is in recording pause mode, the recorded time code is read from the tape and synchronized to the internal time code generator.

Once you set TC MAKE to REGEN in the menu settings
Even if TC RUN is set to FREE RUN in the menu settings, the running mode is automatically set to REC RUN.

Setting the user bits value

You can set the user bits as eight-digit hexadecimal values (base 16) to have the date, time, scene number, and other information inserted into the time code.

(1) Set the POWER switch to VCR or CAMERA.
(2) Press MENU to display the menu.
(3) Turn the SEL/PUSH EXEC dial to select TC, then press the dial.
(4) Turn the SEL/PUSH EXEC dial to select UB PRESET, then press the dial.
(5) Turn the SEL/PUSH EXEC dial to select PRESET, then press the dial.
(6) Set up the first two digits. Turn the SEL/PUSH EXEC dial to select the number, then press the dial.
(7) Repeat step 6 to set up the other digits.
(8) Turn the SEL/PUSH EXEC dial to select SET, then press the dial.

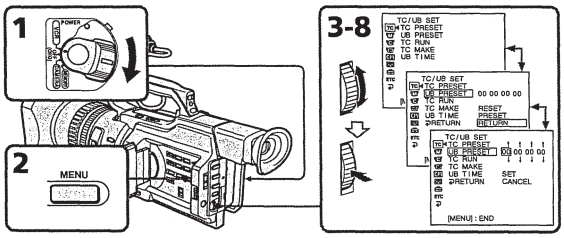

To cancel the user bits setting
Select CANCEL in step 8, then press the SEL/PUSH EXEC dial.

To reset the user bits
Select RESET in step 5, then press the SEL/PUSH EXEC dial.

Setting the user bits to the real time clock

Set UB TIME to ON in the menu settings.

Switching the time value

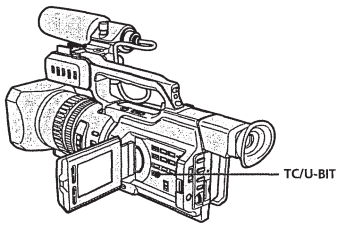

Press TC/U-BIT. Each time you press TC/U-BIT, the time value changes between the time code and user bits.

Note
The time code and user bits cannot be displayed properly if the tape does not have time code and/or user bits recordings or if the time code was recorded using a non-compatible method.

Superimposing a title

CM only — If you use a tape with cassette memory, you can superimpose the title while recording or after recording. When you play back the tape, the title is displayed for five seconds from the point where you superimposed it.

You can select one of eight preset titles and two custom titles (p. 98).

You can also select the colour, size and position of titles.

(1) Press TITLE to display the title menu in standby, recording, playback, or playback pause mode.
(2) Turn the SEL/PUSH EXEC dial to select ▭, then press the dial.
(3) Turn the SEL/PUSH EXEC dial to select the desired title, then press the dial. The title flashes.
(4) Change the colour, size, or position, if necessary.
① Turn the SEL/PUSH EXEC dial to select the COLOUR, SIZE, or POSITION, then press the dial. The item appears.
② Turn the SEL/PUSH EXEC dial to select the desired item, then press the dial.
③ Repeat steps 1 and 2 until the title is laid out as desired.
(5) Press the SEL/PUSH EXEC dial again to complete the setting.
In playback, playback pause, or recording mode:
The "TITLE SAVE" indicator appears on the screen for five seconds and the title is set.
In standby mode:
The "TITLE" indicator appears. When you press START/STOP to start recording, "TITLE SAVE" appears on the screen for five seconds and the title is set.

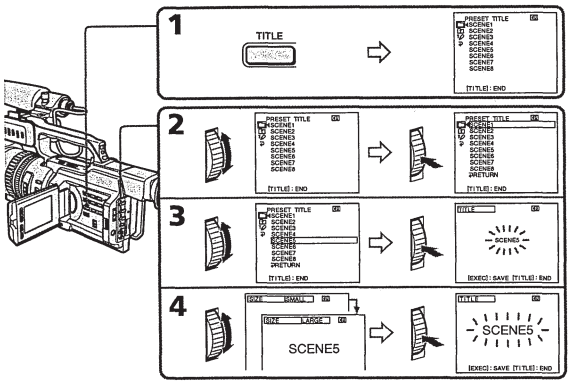

If you set the write-protect tab to lock
You cannot superimpose or erase the title. Slide the write-protect tab to release the write protection.

To use a custom title
If you want to use the custom title, select ▭ in step 2.

If the tape has a blank portion
You cannot superimpose a title on that portion.

If the tape has a blank portion in the middle of the recorded parts
The title may not be displayed correctly.

The titles superimposed with your camcorder
The point you superimposed the title may be detected as an index signal when searching a recording with other video equipment.

To not display titles
Set TITLE DSPL to OFF in the menu settings (p. 104).

Title setting

- The title colour changes as follows:
  WHITE ⟷ YELLOW ⟷ VIOLET ⟷ RED ⟷ CYAN ⟷ GREEN ⟷ BLUE
- The title size changes as follows:
  SMALL ⟷ LARGE
  You cannot input more than 12 characters in LARGE size.
- If you select the title size "SMALL," you have nine choices for the title position.
  If you select the title size "LARGE," you have eight choices for the title position.

If the "CM FULL" mark appears

The cassette memory is full. If you erase the title, index data, date data, photo data, or cassette label in the cassette, you can then superimpose a title.

Erasing a title

(1) Set the POWER switch to VCR or CAMERA.
(2) Press MENU to display the menu.
(3) Turn the SEL/PUSH EXEC dial to select CM, then press the dial.
(4) Turn the SEL/PUSH EXEC dial to select TITLEERASE, then press the dial.
The title erase display appears.
(5) Turn the SEL/PUSH EXEC dial to select the title you want to erase, then press the dial.
The "ERASE OK ?" indicator appears.
(6) Make sure the title is the one you want to erase, and turn the SEL/PUSH EXEC dial to select OK, then press the dial.
"OK" changes to "EXECUTE."
(7) Press the SEL/PUSH EXEC dial.
"ERASING" flashes for about two seconds and "COMPLETE" appears after erasing the title.

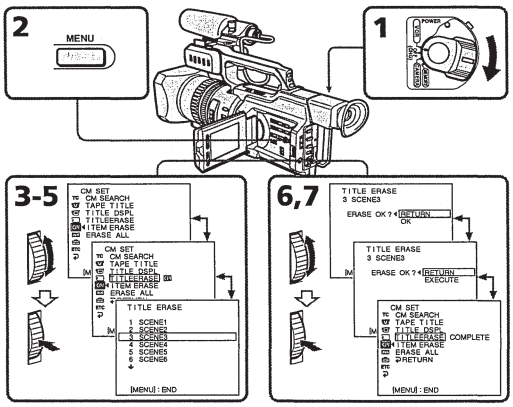

To cancel erasing

Select RETURN in step 6 or 7, then press the SEL/PUSH EXEC dial.

To erase all the titles

See "Erasing the cassette memory data" on page 102.

Making your own titles

CM only — You can make up to two titles and store them in cassette memory. Each title can have up to 20 characters.

(1) Press TITLE in the standby, playback, or playback pause mode.
(2) Turn the SEL/PUSH EXEC dial to select ✓, then press the dial.
(3) Turn the SEL/PUSH EXEC dial to select CUSTOM1 SET or CUSTOM2 SET, then press the dial.
(4) Turn the SEL/PUSH EXEC dial to select the column of the desired character, then press the dial.
(5) Turn the SEL/PUSH EXEC dial to select the desired character, then press the dial.
(6) Repeat steps 4 and 5 until you have selected all characters and completed the title.
(7) To finish making your own titles, turn the SEL/PUSH EXEC dial to select [SET], then press the dial. The title is stored in memory.
(8) Press TITLE to make the title menu disappear.

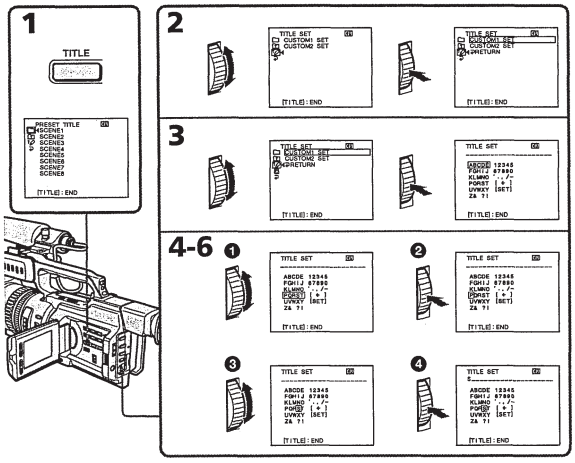

To change a title you have stored

In step 3, select CUSTOM1 SET or CUSTOM2 SET, depending on which title you want to change, then press the SEL/PUSH EXEC dial. Turn the SEL/PUSH EXEC dial to select [←], then press the dial to delete the title. The last character is erased. Enter a new title as desired.

To erase a character

Turn the SEL/PUSH EXEC dial to select [←], then press the dial. The last character is erased.

To enter a space

Select [Z& ? !], then select the blank part.

Labeling a cassette

CM only

If you use a tape with cassette memory, you can label a cassette. The label can consist of up to 10 characters and is stored in cassette memory. When you insert the labelled cassette and set the POWER switch to VCR, CAMERA, or MEMORY, the label is displayed for about five seconds.

(1) Insert the cassette you want to label.
(2) Set the POWER switch to VCR or CAMERA.
(3) Press MENU to display the menu.
(4) Turn the SEL/PUSH EXEC dial to select CM, then press the dial.
(5) Turn the SEL/PUSH EXEC dial to select TAPE TITLE, then press the dial. The tape title display appears.
(6) Turn the SEL/PUSH EXEC dial to select the column of the desired character, then press the dial.
(7) Turn the SEL/PUSH EXEC dial to select the desired character, then press the dial.
(8) Repeat steps 6 and 7 until you finish the label.
(9) Turn the SEL/PUSH EXEC dial to select [SET], then press the dial. The label is stored in memory.

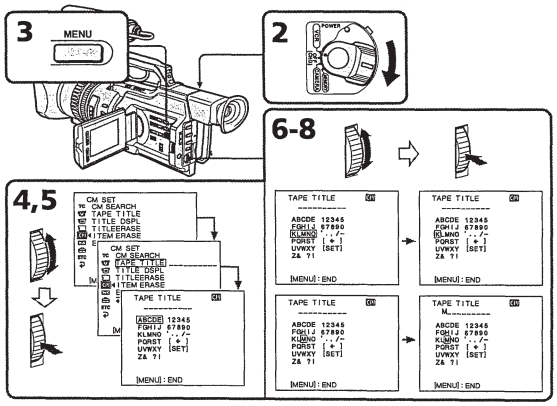

To change the label you have made

Insert the cassette to change the label, and operate in the same way as you do to make a new label.

If you set the write-protect tab of the tape to lock
You cannot label the tape. Slide the write-protect tab to release the write protection.

If you have superimposed titles in the cassette
When the label is displayed, up to four titles also appear.

When the "-----" indicator has fewer than 10 spaces
The cassette memory is full.
The "-----" indicates the number of characters you can select for the label.

To erase a character

Turn the SEL/PUSH EXEC dial to select [←], then press the dial. The last character is erased.

To enter a space

Select [Z& ? !], then select the blank part.

Erasing the cassette memory data

You can erase data stored in cassette memory, each item's data can be erased separately. You can also erase all items' data once.

Erasing each item's data separately

(1) Set the POWER switch to VCR or CAMERA.
(2) Press MENU to display the menu display.
(3) Turn the SEL/PUSH EXEC dial to select CM, then press the dial.
(4) Turn the SEL/PUSH EXEC dial to select ITEM ERASE, then press the dial.
(5) Turn the SEL/PUSH EXEC dial to select the item that you want to erase its data, then press the dial.

Item	Meaning
INDEX ALL	Erases all the index data.
TITLE ALL	Erases all the title data.
DATE ALL	Erases all the date data.
PHOTO ALL	Erases all the photo data.

(6) Turn the SEL/PUSH EXEC dial to select OK, then press the dial. "OK" changes to "EXECUTE."
(7) Press the SEL/PUSH EXEC dial. "ERASING" flashes for about two seconds and "COMPLETE" appears after erasing the selected item's data.

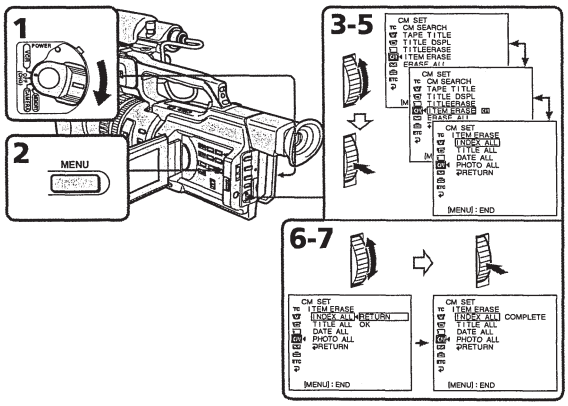

To cancel erasing

Select RETURN in step 6 or 7, then press the SEL/PUSH EXEC dial.

Erasing all the data in cassette memory

(1) Set the POWER switch to VCR or CAMERA.
(2) Press MENU to display the menu display.
(3) Turn the SEL/PUSH EXEC dial to select CM, then press the dial.
(4) Turn the SEL/PUSH EXEC dial to select ERASE ALL, then press the dial.
(5) Turn the SEL/PUSH EXEC dial to select OK, then press the dial. "OK" changes to "EXECUTE."
(6) Press the SEL/PUSH EXEC dial. "ERASING" flashes for about two seconds and "COMPLETE" appears after erasing all the data.

To cancel erasing

Select RETURN in step 5 or 6, then press the SEL/PUSH EXEC dial.

Changing the menu settings

To change the mode settings in the menu settings, select the menu items with the SEL/PUSH EXEC dial. The default settings can be partially changed. First, select the icon, then the menu item and then the mode.

(1) In the standby, VCR, or MEMORY mode, press MENU.
(2) Turn the SEL/PUSH EXEC dial to select the desired icon, then press the dial to set it.
(3) Turn the SEL/PUSH EXEC dial to select the desired item, then press the dial to set it.
(4) Turn the SEL/PUSH EXEC dial to select the desired mode, then press the dial to set it.
(5) If you want to change other items, select ↩ RETURN and press the dial, then repeat steps 2 to 4.

For details, see "Selecting the mode setting of each item" (p. 105).

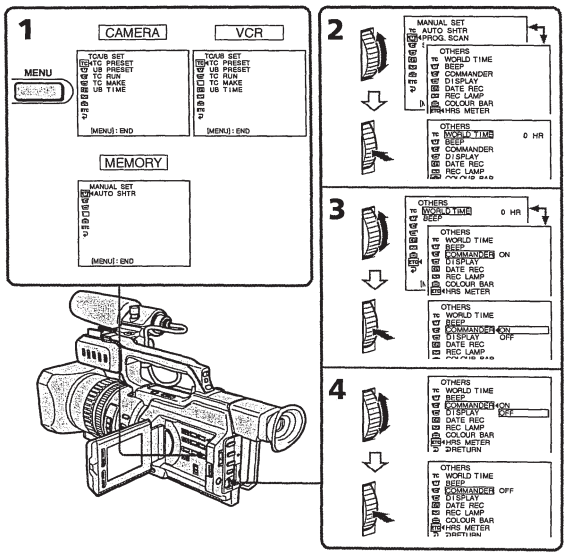

Changing the menu settings

To make the menu display disappear

Press MENU.

Menu items are displayed as the following icons:

- TC/UB SET
- MANUAL SET
- CAMERA SET
- VCR SET
- LCD/VF SET
- MEMORY SET
- CM SET
- TAPE SET
- SETUP MENU
- OTHERS

Selecting the mode setting of each item

● is the default setting.

Menu items differ depending on the position of the POWER switch.
The LCD screen or viewfinder screen shows only the items you can operate at the moment.

Icon/item	Mode	Meaning	POWER switch
TC PRESET	—	Presets/resets the time code (p. 89).	VCR CAMERA
UB PRESET	—	Presets/resets user bits (p. 92).	VCR CAMERA
TC RUN	● REC RUN	Time code value advances only while recording. When making the time code continuous at back space editing, select this setting.	VCR CAMERA
	FREE RUN	Time code advances freely regardless of the camcorder's current operation mode. When adjusting the discrepancy between time code value and real time.	
TC MAKE	● REGEN	Makes the time code continuous at back space editing. Regardless of the TC RUN setting, the running mode is automatically set to REC RUN.	VCR CAMERA
	PRESET	Does not make the time code continuous at back space editing.	
UB TIME	● OFF	Does not set user bits to the real time clock.	VCR
	ON	Sets user bits to the real time clock.	CAMERA

Changing the menu settings

Icon/item	Mode	Meaning	POWER switch
AUTO SHTR	● ON	To automatically adjust the electronic shutter speed.	CAMERA MEMORY
	OFF	To fix the electronic shutter speed.	
PROG. SCAN	● OFF	Records still/moving pictures in the interlace format.	CAMERA
	ON	Records still/moving pictures in progressive mode.	
D ZOOM	● OFF	To deactivate the digital zoom. Up to 12× zoom is carried out.	CAMERA
	24×	To activate the digital zoom. More than 12× zoom is performed digitally. This value goes up to 24× (p. 22).	
	48×	To activate the digital zoom. More than 12× zoom is performed digitally. This value goes up to 48× (p. 22).	
16:9WIDE	● OFF	—	CAMERA
	ON	To record a 16:9 wide picture (p. 36).	
STEADYSHOT	● ON	To compensate for camera-shake.	CAMERA
	OFF	To cancel the SteadyShot function. Natural pictures are produced when shooting a stationary object with a tripod.	MEMORY
FRAME REC	● OFF	Does not make a cut recording.	CAMERA
	ON	Makes a cut recording (p. 61).	
INT. REC	ON	Makes an interval recording (p. 59).	CAMERA
	● OFF	Does not make an interval recording.	
	SET	Sets the interval time and recording time.	
WIND	CH1	Reduces the sound of wind input from the INPUT1 connector (ON) or not (OFF).	CAMERA
	CH2	Reduces the sound of wind input from the INPUT2 connector (ON) or not (OFF).	

Notes on the SteadyShot function
- The SteadyShot function will not correct excessive camera-shake.
- Attachment of a conversion lens (not supplied) may influence the SteadyShot function.

If you cancel the SteadyShot function
The SteadyShot OFF indicator appears. Your camcorder prevents excessive compensation for camera-shake.

Changing the menu settings

Icon/item	Mode	Meaning	POWER switch
CH SELECT	● CH1, CH2	To play back the CHs 1/2 audios from each channel. However, if you play back the audios via the camcorder's speaker, the audios are mixed.	VCR
	CH1	To play back the CH1 audio from both channels 1/2.	
	CH2	To play back the CH2 audio from both channels 1/2.	
AUDIO MIX	—	To adjust the balance between the channels 1/2 (CH1/2) and channels 3/4 (CH3/4) (p. 87). CH1 2 ▲ CH3 4	VCR
A/V→DV OUT	● OFF	To output analog images in digital format using your camcorder.	VCR
	ON	To output digital images in analog format using your camcorder.	
NTSC PB	● ON PAL TV	To play back a tape recorded on your camcorder on a PAL system TV.	VCR
	NTSC 4.43	To play back a tape recorded in the NTSC colour system on a TV with the NTSC 4.43 mode.	
LCD B. L.	● BRT NORMAL	To set the brightness on the LCD screen to normal.	VCR CAMERA
	BRIGHT	To brighten the LCD screen.	MEMORY
LCD COLOUR	—	To adjust the colour on the LCD screen with the SEL/PUSH EXEC dial. To get low-intensity ▲ To get high-intensity	VCR CAMERA MEMORY
VF B.L.	● BRT NORMAL	To set the brightness on the viewfinder screen to normal.	VCR CAMERA
	BRIGHT	To brighten the viewfinder screen.	MEMORY
GUIDEFRAME	● OFF	Does not display the guide frame.	CAMERA
	ON	Displays the guide frame (p. 35).	MEMORY

Notes on LCD B.L. and VF B.L.
- When you select "BRIGHT," battery life is reduced a little during recording.
- When you use power sources other than the battery pack, "BRIGHT" is automatically selected.

Changing the menu settings

Icon/item	Mode	Meaning	POWER switch
CONTINUOUS	● OFF	Not to record continuously.	MEMORY
	ON	To record four images continuously (p. 119).	
	MULTI SCRN	To record nine images continuously (p. 119).	
QUALITY	● SUPER FINE	To record still images in the super fine image quality mode, using a "Memory Stick" (p. 116).	VCR MEMORY
	FINE	To record still images in the fine image quality mode, using a "Memory Stick" (p. 116).	
	STANDARD	To record still images in the standard image quality mode, using a "Memory Stick" (p. 116).	
PRINT MARK	● OFF	To erase print marks on still images.	VCR MEMORY
	ON	To write a print mark on the recorded still images you want to print out later.	
PROTECT	● OFF	To release protection from still images.	VCR MEMORY
	ON	To protect selected still images against accidental erasure (p. 135).	
SLIDE SHOW	—	To play back all the images as a slide show (p. 134).	MEMORY
DELETE ALL	—	To delete all unprotected images (p. 137).	MEMORY
FORMAT	● RETURN	To cancel formatting.	MEMORY
	OK	To format an inserted "Memory Stick." 1. Select FORMAT with the SEL/PUSH EXEC dial, then press the dial. 2. Turn the SEL/PUSH EXEC dial to select OK, then press the dial. 3. After "EXECUTE" appears, press the SEL/PUSH EXEC dial. "FORMATTING" appears during formatting. "COMPLETE" appears when formatting is finished.	
PHOTO SAVE	—	To duplicate images on a tape onto a "Memory Stick" (p. 127).	VCR

Formatting erases all information on the "Memory Stick"
Check the contents of the "Memory Stick" before formatting:
- Formatting erases sample images on the "Memory Stick."
- Formatting erases the protected image data on the "Memory Stick."

Notes on formatting
- Supplied or optional "Memory Stick"s have been formatted at the factory. Formatting with this camcorder is not required.
- While the display shows "FORMATTING," do not turn the POWER switch, press any button, or eject the "Memory Stick"
- You cannot format a "Memory Stick" if the write-protect tab on the "Memory Stick" is set to LOCK.
- Format again if the message "" appears.

If formatting fails
The "FORMAT ERROR" message appears.

Changing the menu settings

Icon/item	Mode	Meaning	POWER switch
CM SEARCH	● ON	To search using cassette memory (p. 64, 66, 67, 69).	VCR
	OFF	To search without using cassette memory.	
TAPE TITLE	—	To label a cassette (p. 100).	VCR CAMERA
TITLE DSPL	● ON	To display the title you have superimposed.	VCR
	OFF	Not to display the title.	
TITLEERASE	—	To erase the title you have superimposed (p. 97).	VCR CAMERA
ITEM ERASE	—	To erase each item's data in cassette memory (p. 102).	VCR CAMERA
ERASE ALL	—	To erase all the data in cassette memory (p. 103).	VCR CAMERA
REC MODE	● DVCAM	To record in the DVCAM format.	VCR
	DV SP	To record in the DV format (SP mode).	CAMERA
AUDIO MODE	● FS32K	To record in Fs32K (12-bit) mode (two stereo sounds).	VCR CAMERA
	FS48K	To record in Fs48K (16-bit) mode (one stereo sound with high quality).	

Notes on AUDIO MODE
- You cannot dub audio sound on a tape recorded in the Fs48K (16-bit) mode.
- When playing back a tape recorded in the Fs48K (16-bit) mode, you cannot adjust the balance in AUDIO MIX.

Note on REC MODE
You cannot dub any audio sound on a tape recorded in the DV format (SP mode), even if you recorded it in Fs32K (12-bit) mode.

Changing the menu settings

Icon/item	Mode	Meaning	POWER switch
REMAIN	● AUTO	To display the remaining tape indication: • for about eight seconds after your camcorder is turned on and calculates the remaining amount of tape • for about eight seconds after a cassette is inserted and your camcorder calculates the remaining amount of tape • for about eight seconds after ► is pressed in VCR mode • for about eight seconds after DISPLAY is pressed to display the screen indicators • for the period of tape rewinding, forwarding or picture search in the VCR mode	VCR CAMERA
	ON	To always display the remaining tape indicator.	
DATA CODE	● DATE/CAM	To display date, time and various settings during playback.	VCR
	DATE	To display date and time during playback.	
MIC NR	● ON	To reduces the microphone noise.	VCR
	OFF	To deactivate the function above.	CAMERA
AUDIO SET	—	Adjusts the audio recording level manually (p. 52).	VCR CAMERA
CLOCK SET	—	To reset the date or time (p. 112).	CAMERA MEMORY
LTR SIZE	● NORMAL	To display selected menu items in normal size.	VCR CAMERA
	2×	To display selected menu items at twice the normal size.	MEMORY
LOGO INS	—	To always insert the still image on the moving picture. For details, refer to the operating instructions (for the auto logo insert function) supplied with this camcorder.	CAMERA
WORLD TIME	—	To set the clock to the local time. Turn the SEL/PUSH EXEC dial to set a time difference. The clock changes by the time difference you set here. If you set the time difference to 0, the clock returns to the originally set time.	CAMERA MEMORY

Changing the menu settings

Icon/item	Mode	Meaning	POWER switch
BEEP	MELODY	To chime a melody in normal operations, and beep a warning sound for five seconds.	VCR CAMERA MEMORY
	● NORMAL	To beep in the following situations: turning on the power, pressing the start/stop button, and when a warning message appears.	
	OFF	To cancel the melody, beep, and shutter click sound.	
COMMANDER	● ON	To activate the Remote Commander supplied with your camcorder.	VCR CAMERA MEMORY
	OFF	To deactivate the Remote Commander to avoid remote control misoperation caused by an other VCR's remote control.	
DISPLAY	● LCD	To show the display on the LCD screen and viewfinder screen.	VCR CAMERA MEMORY
	V-OUT/LCD	To show the display on a TV screen, LCD screen and viewfinder screen.	
DATE REC	● OFF	To not superimpose the date and time on the picture.	CAMERA
	ON	To superimpose the date and time on the picture.	
REC LAMP	● ON	To light up the camera recording lamps at the front and rear of your camcorder.	CAMERA MEMORY
	OFF	To turn the camera recording lamp off.	
COLOUR BAR	● OFF	Does not display the colour bar.	CAMERA
	ON	Displays the colour bar.	
VIDEO EDIT	—	To make programs and perform video editing (p. 77).	VCR
EDIT SET	—	To adjust and set the synchronization of your camcorder and a VCR for dubbing in edit set mode (p. 75).	VCR
HRS METER	OPERATION	The cumulative total hours of operation is displayed in 10-operation increments.	VCR CAMERA
	DRUM RUN	The cumulative total hours of drum rotation with tape threaded is displayed in 10-operation increments.	
	TAPE RUN	The cumulative total hours of tape running is displayed in 10-operation increments.	
	THREADING	The cumulative number of tape unthreading operation is displayed in 10-operation increments.	

Notes
- If you press DISPLAY with DISPLAY set to V-OUT/LCD in the menu settings, the picture from a TV or VCR will not appear on the LCD screen even when your camcorder is connected to outputs on the TV or VCR (except using an i.LINK cable (DV connecting cable)).
- You cannot erase the date and time superimposed using the DATE REC function.

Resetting the date and time

The date and time are set at the factory. Set the time according to the local time in your country. If you do not use your camcorder for about four months, the date and time settings may be released because the vanadium-lithium battery installed in your camcorder will have been discharged (p. 157).
First, set the year, then the month, the day, the hour and then the minute.

(1) Press MENU to display the menu in the standby mode.
(2) Turn the SEL/PUSH EXEC dial to select [illegible], then press the dial.
(3) Turn the SEL/PUSH EXEC dial to select CLOCK SET, then press the dial.
(4) Turn the SEL/PUSH EXEC dial to adjust to the desired year, then press the dial.
(5) Set the month, day and hour by turning the SEL/PUSH EXEC dial and pressing the dial.
(6) Set the minute by turning the SEL/PUSH EXEC dial and pressing the dial by the time signal. The clock starts to move.
(7) Press MENU to make the menu settings disappear.

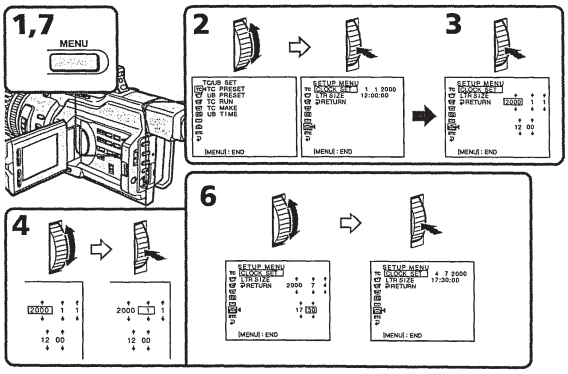

The year changes as follows:
1995 ⟷ 1996 ⟵ · · · ⟶ 2000 ⟵ · · · · ⟶ 2079

If you do not set the date and time
"- -:- -:- -" as time, and "– – ––" as date will be recorded.

Note on the time indicator
The internal clock of this camcorder operates on a 24-hour cycle.

Using a "Memory Stick" – introduction

You can record and play back still images on the "Memory Stick" supplied with your camcorder. You can easily play back, record or delete still images. You can exchange image data with other equipment such as a personal computer etc., using the Memory Stick Reader/Writer supplied with your camcorder or a PC card adaptor for Memory Stick (not supplied).

On file format (JPEG)
Your camcorder compresses image data in JPEG format (extension .jpg).

Typical image data file name
100-0001: As displayed on the LCD screen or in the viewfinder of the camcorder.
Dsc00001.jpg: As displayed on your PC screen.

Before using a "Memory Stick"

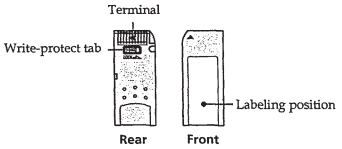

- You cannot record or erase still images when the write-protect tab on the "Memory Stick" is set to LOCK.
- We recommend backing up important data.
- Image data may be damaged in the following cases:
  - If you remove the "Memory Stick," turn the power off, or detach the battery for replacement when the access lamp is flashing.
  - If you use a "Memory Stick" near static electricity or magnetic fields.
- Prevent metallic objects or your finger from coming into contact with the metal parts of the connecting section.
- Stick its label on the labeling position.
- Do not bend, drop or apply strong shock to a "Memory Stick."
- Do not disassemble or modify a "Memory Stick."
- Do not let the "Memory Stick" get wet.
- Do not use or keep a "Memory Stick" in locations that are:
  - Extremely hot such as in a car parked in the sun or under the scorching sun.
  - Under direct sunlight.
  - Very humid or subject to corrosive gases.
- When you carry or store a "Memory Stick," put it in its case.

A "Memory Stick" formatted by a computer

A "Memory Stick" formatted by the Windows OS or Macintosh computers does not have a guaranteed compatibility with this camcorder.

Notes on image data compatibility

- Image data files recorded on a "Memory Stick" by your camcorder conform to the Design Rules for Camera File Systems universal standard (DCF98 standard) established by the JEIDA (Japan Electronic Industry Development Association). You cannot play back on your camcorder still images recorded on other equipment (DCR-TRV890E/TRV900/TRV900E or DSC-D700/D770) that does not conform to this universal standard. (These models are not sold in some areas.)
- If you cannot use a "Memory Stick" that is used with other equipment, format it with this camcorder (p. 108). However, formatting erases all information on the "Memory Stick."

"Memory Stick" and [illegible] are trademarks of Sony Corporation.

- Windows is a registered trademark licensed to Microsoft Corporation, registered in the U.S.A. and other countries.
- Macintosh and Mac OS are trademarks of Apple Computer, Inc.
- All other product names mentioned herein may be the trademarks or registered trademarks of their respective companies.

Furthermore, "™" and "®" are not mentioned in each case in this manual.

Inserting a "Memory Stick"

Insert the "Memory Stick" with the Sony logo pointing toward the LCD panel and the ◀ mark pointing inward.

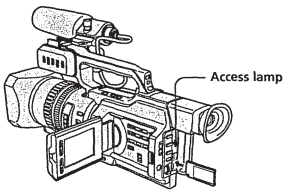

To eject a "Memory Stick"

Push the "Memory Stick" inward, then release your finger. The "Memory Stick" comes out a little.

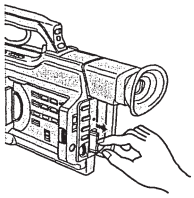

Note
The "Memory Stick" may pop out depending on the way you push it.

When the access lamp is lit or flashing
Never shake or strike your camcorder. Do not turn the power off, eject a "Memory Stick" or remove the battery pack. Otherwise, image data breakdown may occur.

If the "[illegible] MEMORY STICK ERROR" indicator appears
The "Memory Stick" is broken or the file format is not proper. Eject the "Memory Stick," check it, and insert it again. If the same indicator appears, use another "Memory Stick."

Selecting the image quality mode

You can select the image quality mode in still picture recording. The default setting is SUPER FINE.

(1) Set the POWER switch to VCR or MEMORY. Make sure that the LOCK switch is set to the right (unlock) position.
(2) Press MENU to display the menu.
(3) Turn the SEL/PUSH EXEC dial to select ▭, then press the dial.
(4) Turn the SEL/PUSH EXEC dial to select QUALITY, then press the dial.
(5) Turn the SEL/PUSH EXEC dial to select the desired image quality, then press the dial.

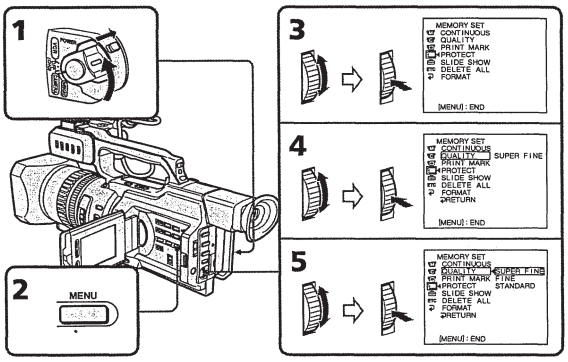

Image quality settings

Setting	Meaning
SUPER FINE	This is the highest image quality in this camcorder. The number of still images you can record is fewer than FINE. The image is compressed to about 1/3.
FINE	Use this mode when you want to record high quality images. The image is compressed to about 1/6.
STANDARD	This is the standard image quality. The image is compressed to about 1/10.

Note
In some cases, changing the image quality mode may not affect the image quality, depending on the types of images you are shooting.

Differences in image quality mode
Recorded images are compressed in JPEG format before being stored in memory. The memory capacity allotted to each image varies depending on the image quality mode selected. Details are shown in the table below.

Image quality mode	Memory capacity
SUPER FINE	Approx. 190 KB
FINE	Approx. 100 KB
STANDARD	Approx. 60 KB

Note on the image quality mode indicator
This is only displayed during recording.

The approximate number of images you can record on a "Memory Stick"

The approximate number of images you can record on a "Memory Stick" that is formatted using this camcorder varies depending on which image quality mode you select and the complexity of the subject.

	Image quality mode		
	SUPER FINE	FINE	STANDARD
4 MB type (supplied)	20 images	40 images	60 images
8 MB type (not supplied)	40 images	81 images	122 images
16 MB type (not supplied)	82 images	164 images	246 images
32 MB type (not supplied)	164 images	329 images	494 images
64 MB type (not supplied)	329 images	659 images	988 images

Recording still images on a "Memory Stick" – Memory Photo recording

You can record still images on a "Memory Stick."

Before operation
Insert a "Memory Stick" into your camcorder.

(1) Set the POWER switch to MEMORY. Make sure that the LOCK switch is set to the right (unlock) position.
(2) Keep pressing PHOTO lightly until the desired still picture appears. The green ● mark stops flashing, then lights up. The brightness of the picture and focus are re-adjusted, being targeted for the middle of the picture and are fixed. Recording does not start yet.
(3) Press PHOTO deeply. The shutter clicks and the image is frozen. The image displayed on the screen will be recorded on the "Memory Stick." Recording is complete when the bar scroll indicator disappears.

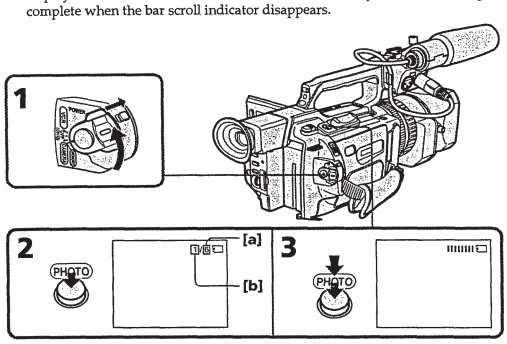

[a] The number of images that can be recorded on the "Memory Stick"
[b] The number of recorded images

When the POWER switch is set to MEMORY
The following functions do not work: wide TV mode, digital effect, title, digital zoom, fader, and shutter speed (1/25 or smaller) adjustment .

Note
When you press the PHOTO button lightly at step 2, the focus of the image seems to be momentarily out.

When the auto logo insert function is activated
You cannot do memory photo recording.

While you are recording a still image
You can neither turn off the power nor press PHOTO.

When you press PHOTO on the Remote Commander
Your camcorder immediately records the image that is on the screen when you press the button.

Recording images continuously

You can record still images continuously. Select one of the two modes described below before recording.

Continuous mode [a]
You can record still images continuously. The number of images is in accordance with remaining capacity of the "Memory Stick."

Multi screen mode [b]
You can record nine still images continuously on a single page.

[a]

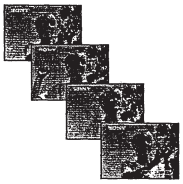

[b]

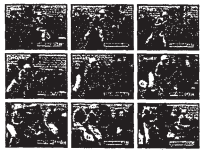

While pressing down PHOTO, the camcorder shoots still images continuously. The maximum number of recordable still images is up to four. If you release the button during shooting, the recording stops even if it is in progress.

Recording still images on a "Memory Stick" – Memory Photo recording

(1) Set the POWER switch to MEMORY. Make sure that the LOCK switch is set to the right (unlock) position.
(2) Press MENU to display the menu.
(3) Turn the SEL/PUSH EXEC dial to select ▭, then press the dial.
(4) Turn the SEL/PUSH EXEC dial to select CONTINUOUS, then press the dial.
(5) Turn the SEL/PUSH EXEC dial to select the desired setting, then press the dial.

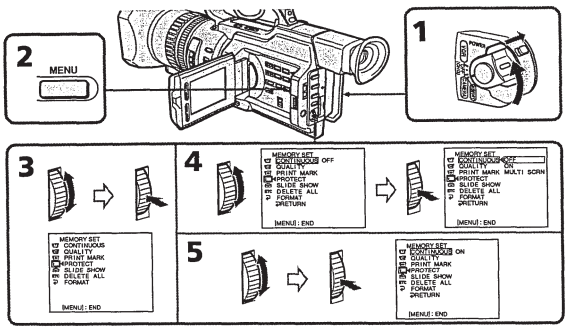

Continuous shooting settings

Setting	Meaning (indicator on the screen)
OFF	Your camcorder shoots one image at a time. (no indicator)
ON	Your camcorder shoots still images at about 0.5 sec intervals. ( )
MULTI SCRN	Your camcorder shoots nine still images at about 0.5 sec intervals and displays the images on a single page divided into nine boxes. ( )

If the capacity of the "Memory Stick" becomes full

"FULL" appears on the screen, and you cannot record still pictures on this "Memory Stick."

The number of images in continuous shooting
The number of images you can shoot continuously varies depending on the remaining capacity of the "Memory Stick." The shutter always clicks four times, however, the number of images recordable may be less than four.

Note on using a video flash light (not supplied)
The video flash light does not work in the continuous or multi screen mode if you install it to the intelligent accessory shoe.

When shooting with the Remote Commander
The camcorder automatically records up to the maximum recordable number of still pictures.

Superimposing a still image in a "Memory Stick" on a moving picture – MEMORY MIX

You can superimpose a still image you have recorded on a "Memory Stick" on the top of the moving picture you are recording.

M. CHROM (Memory chromakey)
You can swap a blue area of a still image such as an illustration or a frame with a moving picture.

M. LUMI (Memory luminancekey)
You can swap a brighter area of a still image such as a handwritten illustration or title with a moving picture. Record a title on a "Memory Stick" before a trip or event for convenience.

C. CHROM (Camera chromakey)
You can superimpose a moving picture on a still image that used as background. Shoot the subject against a blue background. The blue area of the moving picture will be swapped with a still image.

M. OVERLAP (Memory overlap)
You can make a moving picture fade in on top of a still image.

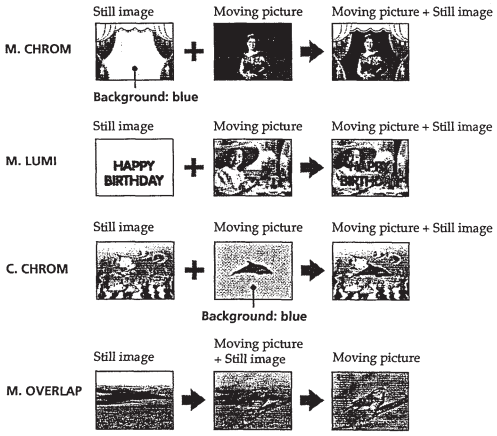

Superimposing a still image in a "Memory Stick" on a moving picture – MEMORY MIX

Before operation
Insert a recorded "Memory Stick" and a tape to be recorded into your camcorder.

(1) Set the POWER switch to CAMERA.
(2) Press MEMORY MIX in standby mode.
The last recorded or last composed image appears on the lower part of the screen as a thumbnail image.
(3) Press MEMORY+/– or +/– on the Remote Commander to select the still image you want to superimpose.
To see the previous image, press MEMORY – or – on the Remote Commander.
To see the next image, press MEMORY+ or + on the Remote Commander.
(4) Turn the SEL/PUSH EXEC dial to select the desired mode.
The mode changes as follows:
M. CHROM ⟷ M. LUMI ⟷ C. CHROM ⟷ M. OVERLAP
(5) Press the SEL/PUSH EXEC dial.
The still image is superimposed on the moving picture, and your camcorder is in standby mode.
(6) Turn the SEL/PUSH EXEC dial to adjust the effect.
(7) Press START/STOP to start recording.

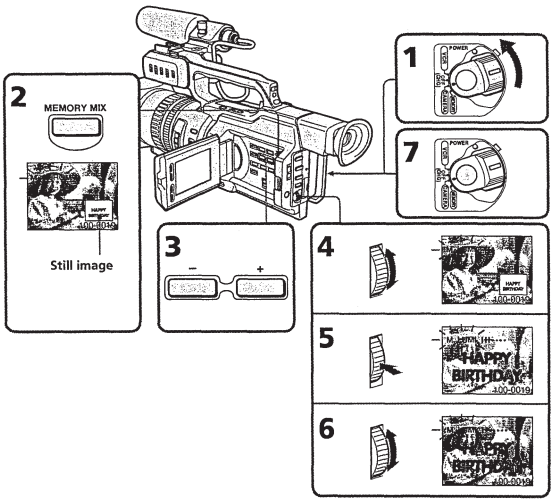

Superimposing a still image in a "Memory Stick" on a moving picture – MEMORY MIX

Items to be adjusted

M. CHROM	The colour (blue) scheme of the area in the still picture which is to be swapped with a moving picture
M. LUMI	The colour (bright) scheme of the area in the still picture which is to be swapped with a moving picture
C. CHROM	The colour (blue) scheme of the area in the moving picture which is to be swapped with a still picture
M. OVERLAP	No adjustment necessary

As the bar is shorter, the effect is enhanced.

To change the still image to be superimposed

Do either of the following:
– Press MEMORY+/– before step 6.
– Press the SEL/PUSH EXEC dial before step 6, and repeat the procedure from step 4 (except M. OVERLAP).

To change the mode setting

Press SEL/PUSH EXEC dial after step 6, and repeat the procedure from step 4 (except M. OVERLAP).

To cancel MEMORY MIX

Press MEMORY MIX again.

During recording
You cannot change the mode setting.

The "Memory Stick" supplied with your camcorder has 20 images stored
– For M. CHROM: 18 images (such as a frame) 100-0001 to 100-0018
– For C. CHROM: two images (such as background) 100-0019 to 100-0020

Sample images
Sample images stored in the "Memory Stick" supplied with your camcorder are protected (p. 135).

If a still image to be superimposed has lots of white areas
The thumbnail image may not be displayed clearly.

Image data modified with personal computers or shot with other equipment
You may not be able to play them back with your camcorder.

When the auto logo insert function is activated
You cannot use memory mix function.

Recording an image from a tape as a still image

Your camcorder can read moving picture data recorded on a tape and record it as a still image on a "Memory Stick." Your camcorder can also take in moving picture data through the input connector and record it as a still image on a "Memory Stick."

Before operation
Insert a recorded tape and a "Memory Stick" into your camcorder.

(1) Set the POWER switch to VCR.
(2) Press ►. The picture recorded on the tape is played back.
(3) Keep pressing PHOTO lightly until the picture from the tape freezes. "CAPTURE" appears on the LCD screen or in the viewfinder. Recording does not start yet.
(4) Press PHOTO deeper. The image displayed on the screen will be recorded on a "Memory Stick." Recording is complete when the bar scroll indicator disappears.

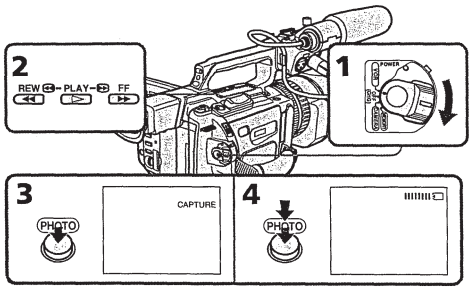

When the access lamp is lit or is flashing
Never shake or strike the unit. Also, do not turn the power off, eject a "Memory Stick" or remove the battery pack. Otherwise, image data breakdown may occur.

If "" appears on the LCD screen or in the viewfinder
The inserted "Memory Stick" is incompatible with your camcorder because its format does not conform to that of your camcorder. Check the format of the "Memory Stick."

If you press PHOTO lightly in the playback mode
The playback pauses momentarily.

Sound recorded on a tape
You cannot record the sound from a tape.

When the auto logo insert function is activated
You cannot use this function.

Recording an image from a tape as a still image

Titles that are already recorded on tapes
You cannot record the titles on a "Memory Stick."

When you press PHOTO on the Remote Commander
Your camcorder immediately records the image that is on the screen when you press the button.

Recording a still image from other equipment

(1) Set the POWER switch to VCR and set DISPLAY in ETC to LCD in the menu settings.
(2) Play back the recorded tape, or turn the TV on to see the desired program. The picture from the other equipment appears on the LCD screen or in the viewfinder.
(3) Follow steps 3 and 4 on page 124.

When recording an image through the VIDEO jack

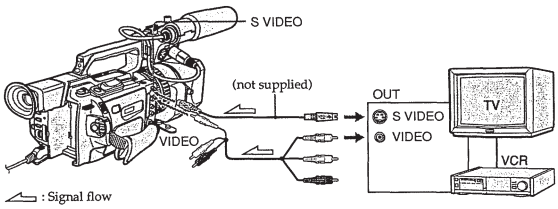

Connect the yellow plug of the A/V connecting cable supplied with your camcorder to the video jack on the VCR or the TV.

Connect using an S video cable (not supplied) to obtain high-quality pictures
With this connection, you do not need to connect the yellow (video) plug of the A/V connecting cable.
Connect an S video cable (not supplied) to the S video jacks of both your camcorder and the VCR/TV.
This connection produces higher quality DVCAM/DV format pictures.

Recording an image from a tape as a still image

When recording the image through the i DV IN/OUT jack

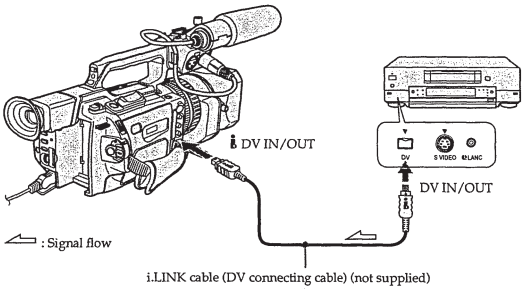

Copying still images from a tape – Photo save

Using the search function, you can automatically take in only still images from tapes and record them on a "Memory Stick" in sequence.

Before operation
- Insert a recorded tape into your camcorder and rewind the tape.
- Insert a "Memory Stick" into your camcorder.

(1) Set the POWER switch to VCR.
(2) Press MENU to display the menu.
(3) Turn the SEL/PUSH EXEC dial to select , then press the dial.
(4) Turn the SEL/PUSH EXEC dial to select PHOTO SAVE, then press the dial. "PHOTO BUTTON" appears on the LCD screen or in the viewfinder.
(5) Press PHOTO deeply. The still image from the tape is recorded on the "Memory Stick." The number of still images copied is displayed. "END" is displayed when copying is completed.

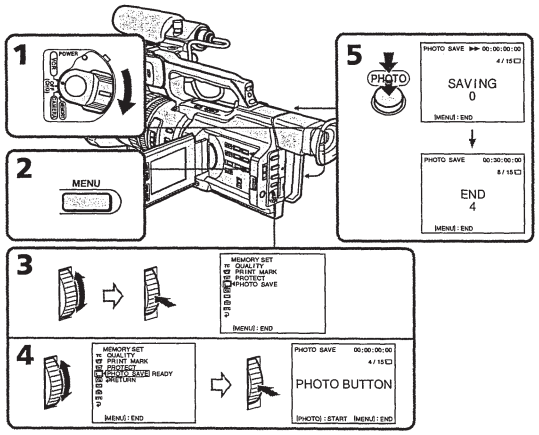

Copying still images from a tape – Photo save

To cancel copying
Press MENU.

When the memory of the "Memory Stick" is full
"MEMORY FULL" appears on the LCD screen or in the viewfinder, and the copying stops. Insert another "Memory Stick" and repeat the procedure from step 2.

When the access lamp is lit or flashing
Never shake or strike your camcorder. Also, do not turn the power off, eject the "Memory Stick" or remove the battery pack. Otherwise, the image data breakdown may occur.

To record all the images recorded on the tape
Rewind the tape all the way back and start copying.

If the write-protect tab on the "Memory Stick" is set to LOCK
"NOT READY" appears when you select the item in the menu settings.

When you change the "Memory Stick" in the middle of copying
Your camcorder resumes copying from the last image recorded on the previous "Memory Stick."

When the auto logo insert function is activated
You cannot use the photo save function.

Viewing a still picture – Memory Photo playback

You can play back still images recorded on a "Memory Stick." You can also play back six images at a time by selecting the index screen.

Before operation
Insert a "Memory Stick" into your camcorder.

(1) Set the POWER switch to VCR or MEMORY. Make sure that the LOCK switch is set to the right (unlock) position.
(2) Press MEMORY PLAY. The last recorded image is displayed.
(3) Press MEMORY +/– or +/– on the Remote Commander to select the desired still image. To see the previous image, press MEMORY – or – on the Remote Commander. To see the next image, press MEMORY + or + on the Remote Commander.

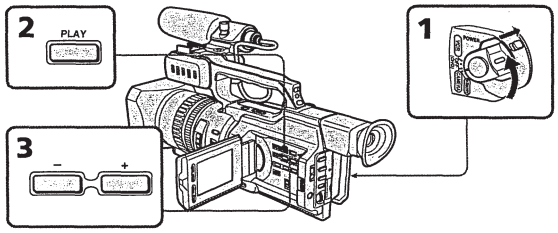

To stop memory photo playback
Press MEMORY PLAY again.

To play back recorded images on a TV screen
- Connect your camcorder to the TV with the A/V connecting cable supplied with your camcorder before operation.
- When operating memory photo playback on a TV or on the LCD screen, the image quality may appear to have deteriorated. This is not a malfunction. The image data is as good as ever.
- Turn the audio volume of the TV down before operation, or noise (howling) may be output from the TV speakers.

When no images are recorded on the "Memory Stick"
The message "NO FILE" appears.

Image data modified with personal computers or shot with other equipment
You may not be able to play them back with your camcorder.

Note on the date/time indicator
Recording date/time is not displayed, however, it is automatically recorded on the "Memory Stick." You can check the recording date/time while in memory playback mode by pressing DATA CODE.

When the auto logo insert function is activated
You cannot do memory photo playback.

Viewing a still picture – Memory Photo playback

Screen indicators during still image playback

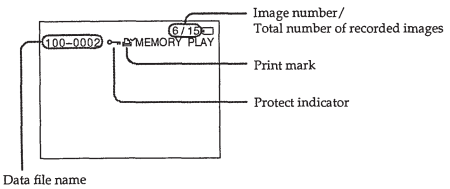

On data file name
- When the hyphen is indicated between the directory and the file number, this data file name means that this file corresponds to the DCF98 standard.
- When the underbar is indicated between the directory and the file number, this data file name means that this file does not correspond to the DCF98 standard.
- The directory is not indicated if the file structure in the "Memory Stick" does not correspond to the DCF98 standard.
- The "DIRECTORY ERROR" message may appear if the file structure in the "Memory Stick" does not correspond to the DCF98 standard. In this case, you cannot record on that "Memory Stick," however, you can play back images in the "Memory Stick."
- When the data file name is flashes, the file may be broken or the file format does not correspond to your camcorder.

Playing back six recorded images at a time (index screen)

You can play back six recorded images at a time. This function is especially useful when searching for a particular image.
(1) Set the POWER switch to VCR or MEMORY. Make sure that the LOCK switch is set to the right (unlock) position.
(2) Press MEMORY INDEX to display the index screen.

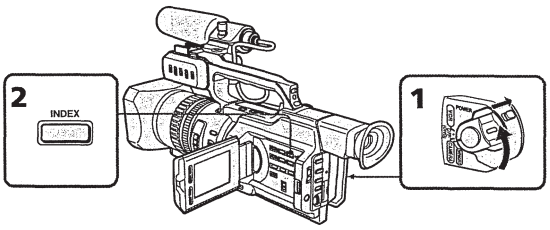

Viewing a still picture – Memory Photo playback

A red ▶ mark appears above the image that is displayed before changing to the index screen mode.
MEMORY – : to display the previous six images
MEMORY + : to display the following six images
If you select the desired image by turning the SEL/PUSH EXEC dial, then press the dial, the selected image will be displayed on full screen.

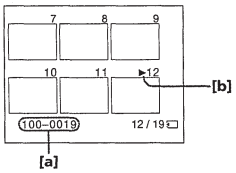

[a] File name
[b] ▶ mark

To return to the normal playback screen (single screen)
Press MEMORY +/– to move the ▶ mark to the image you want to display on full screen, then press MEMORY PLAY.

Files modified with personal computers
These files may not be displayed on the index screen. Image files shot with other equipment may not be displayed on the index screen either.

Note
When displaying the index screen, a number appears above each image. This indicates the order in which images are recorded on the "Memory Stick." These numbers are different from the data file names.

Viewing the recorded images using a personal computer

The image data recorded with your camcorder is compressed in the JPEG format. If you use the application software, "PictureGear 4.1Lite" supplied with your camcorder, you can see images recorded on a "Memory Stick" on a computer screen. Use the Memory Stick Reader/Writer supplied with your camcorder, the Memory Stick/PC card kit or PC card adaptor for Memory Stick (not supplied) for this operation. For detailed instructions on operation, refer to the operating instructions of the Memory Stick Reader/Writer, Memory Stick/PC card kit or PC card adaptor for Memory Stick and your application software. For details, refer to the operating instructions of your accessory.
- Do not modify the directory of the file that corresponds to the DCF98 standard. The modified file will not be read.
- If you use the new "Memory Stick," be sure to use it first with this camcorder.

Recommended Windows environment
- OS: Microsoft Windows 98 standard installation
  Operation in an environment upgraded to Windows 98 is not assured.
- CPU: MMX Pentium 200 MHz or faster

Recommended Macintosh environment
- OS: Mac OS system 8.5/8.6 standard installation
- Model: iMac/G3

Copying an image recorded on a "Memory Stick" to tapes

You can copy still images or titles recorded on a "Memory Stick" and record them to a tape.

Before operation
Insert a tape for recording and a "Memory Stick" for playback into your camcorder.

(1) Set the POWER switch to VCR.
(2) Using the video control buttons, search for a point where you want to record the desired still image. Set the tape to playback pause mode.
(3) Press ● REC and the button on its right simultaneously on your camcorder. The tape is set to the recording pause mode.
(4) Press MEMORY PLAY to play back the still image you want to copy.
(5) Press ❚❚ to start recording and press ❚❚ again to stop.
(6) If you have more to copy, repeat steps 4 and 5.

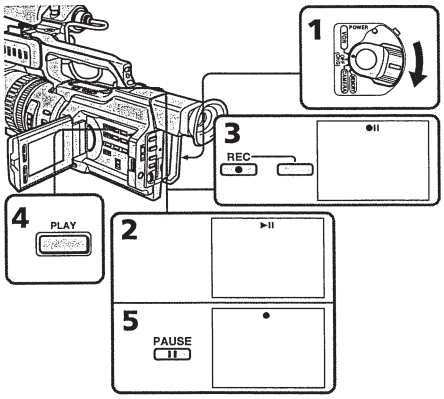

To stop copying in the middle
Press ■.

During copying
- You cannot operate the following buttons:
  MEMORY PLAY, MEMORY INDEX, MEMORY DELETE, MEMORY +, MEMORY –, and MEMORY MIX.
- If you continue copying, do not use EDITSEARCH to search for the point where you want to record the desired still image. If you do, the playback image disappears from the screen.

Note on the index screen
You cannot record the index screen.

Image data modified with personal computers or shot with other equipment
You may not be able to copy them with your camcorder.

If you press DISPLAY in standby or recording mode
You can see memory playback and the file name indicators in addition to the indicators pertinent to tapes, such as the time code indicator.

When the auto logo insert function is activated
You cannot use this function.

Playing back images continuously – SLIDE SHOW

You can automatically play back images in sequence. This function is useful especially when checking recorded images or during a presentation.

Before operation
Insert a "Memory Stick" into your camcorder.

(1) Set the POWER switch to MEMORY. Make sure that the LOCK switch is set to the right (unlock) position.
(2) Press MENU to display the menu.
(3) Turn the SEL/PUSH EXEC dial to select ▭, then press the dial.
(4) Turn the SEL/PUSH EXEC dial to select SLIDE SHOW, then press the dial.
(5) Press MEMORY PLAY. Your camcorder plays back the images recorded on the "Memory Stick" in sequence.

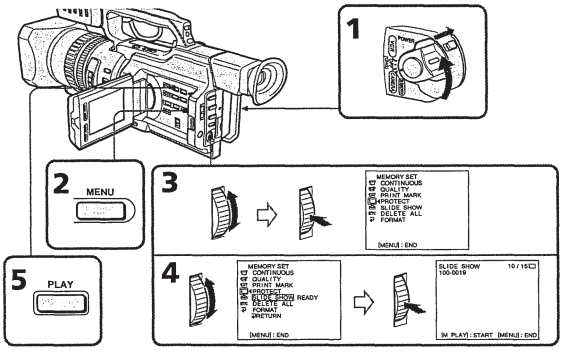

To stop or end the slide show
Press MENU.

To pause during a slide show
Press MEMORY PLAY.

To start the slide show from a particular image
Select the desired image using MEMORY +/– buttons before step 2.

To view the recorded images on TV
Connect your camcorder to a TV with the A/V connecting cable supplied with your camcorder before operation.

If you change the "Memory Stick" during operation
Be sure to follow the steps again from the beginning.

When the auto logo insert function is activated
You cannot use this function.

Preventing accidental erasure – Image protection

To prevent accidental erasure of important images, you can protect selected images.

Before operation
Insert a "Memory Stick" into your camcorder.

(1) Set the POWER switch to MEMORY or VCR. Make sure that the LOCK switch is set to the right (unlock) position.
(2) Play back the image you want to protect (p. 129).
(3) Press MENU to display the menu.
(4) Turn the SEL/PUSH EXEC dial to select ▭, then press the dial.
(5) Turn the SEL/PUSH EXEC dial to select PROTECT, then press the dial.
(6) Turn the SEL/PUSH EXEC dial to select ON, then press the dial.
(7) Press MENU to erase the menu display. The "⊶" mark is displayed beside the data file name of the protected image.

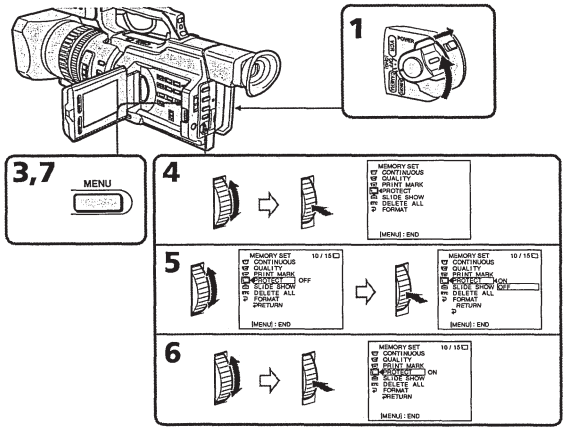

To cancel image protection
Select OFF in step 6, then press the SEL/PUSH EXEC dial.

Note
Formatting erases all information on the "Memory Stick," including the protected image data. Check the contents of the "Memory Stick" before formatting.

If the write-protect tab on the "Memory Stick" is set to LOCK
You cannot carry out image protection.

When the auto logo insert function is activated
You cannot use this function.

Deleting images

You can delete images stored in a "Memory Stick."

Deleting selected images

Before operation
Insert a "Memory Stick" into your camcorder.

(1) Set the POWER switch to MEMORY or VCR. Make sure that the LOCK switch is set to the right (unlock) position.
(2) Play back the image you want to delete (p. 129).
(3) Press MEMORY DELETE. "DELETE?" appears on the LCD screen or in the viewfinder.
(4) Press MEMORY DELETE again. The selected image is deleted.

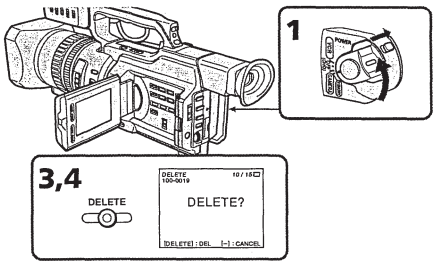

To cancel deleting an image
Press MEMORY – in step 4.

To delete an image displayed on the index screen
Press MEMORY +/– to move the ▶ indicator to the desired image and follow steps 3 and 4.

Notes
- To delete a protected image, first cancel image protection.
- Once you delete an image, you cannot restore it. Check the images to be deleted carefully before deleting them.

While "DELETING" appears
Do not turn the POWER switch or press any buttons.

If the write-protect tab on the "Memory Stick" is set to LOCK
You cannot delete any image.

When the auto logo insert function is activated
You cannot use this function.

Deleting all the images

You can delete all the unprotected images in a "Memory Stick."

Before operation
Insert a "Memory Stick" into your camcorder.

(1) Set the POWER switch to MEMORY. Make sure that the LOCK switch is set to the right (unlock) position.
(2) Press MENU to display the menu.
(3) Turn the SEL/PUSH EXEC dial to select ▭, then press the dial.
(4) Turn the SEL/PUSH EXEC dial to select DELETE ALL, then press the dial.
(5) Turn the SEL/PUSH EXEC dial to select OK, then press the dial. "OK" changes to "EXECUTE."
(6) Press the SEL/PUSH EXEC dial. "DELETING" appears on the LCD screen or in the viewfinder. When all the unprotected images are deleted, "COMPLETE" is displayed.

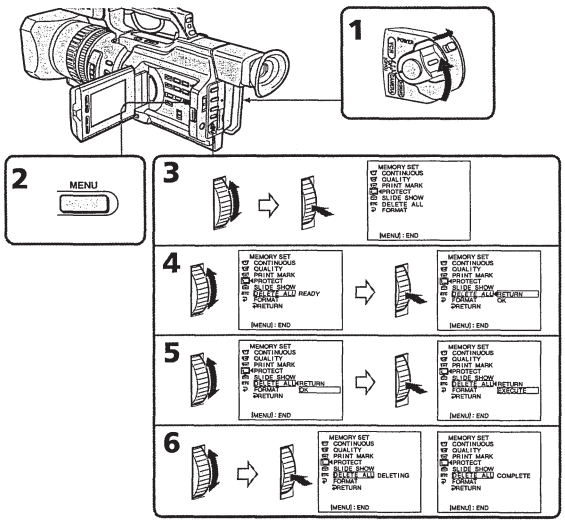

To cancel deleting all the images in the "Memory Stick"
Select RETURN in step 5, then press the SEL/PUSH EXEC dial.

Writing a print mark – Print mark

You can specify the recorded still image to be printed out. This function is useful for printing out still images later.
Your camcorder conforms with the DPOF (Digital Print Order Format) standard for specifying the still images to print out.

Before operation
Insert a "Memory Stick" into your camcorder.

(1) Set the POWER switch to MEMORY or VCR. Make sure that the LOCK switch is set to the right (unlock) position.
(2) Play back the image to be printed out (p. 129).
(3) Press MENU to display the menu.
(4) Turn the SEL/PUSH EXEC dial to select ▭, then press the dial.
(5) Turn the SEL/PUSH EXEC dial to select PRINT MARK, then press the dial.
(6) Turn the SEL/PUSH EXEC dial to select ON, then press the dial.
(7) Press MENU to erase the menu display. The "🖹" mark is displayed beside the data file name of an image with a print mark.

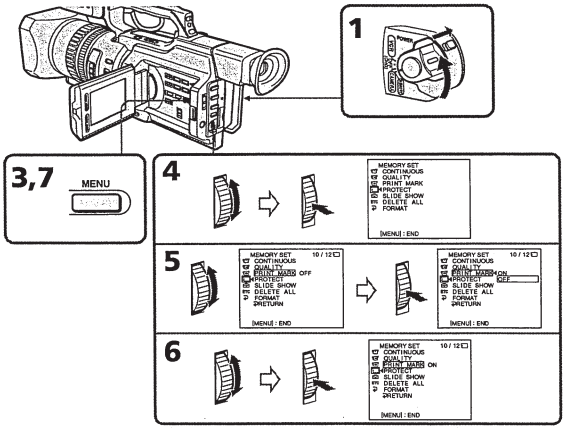

To cancel writing print marks
Select OFF in step 6, then press the SEL/PUSH EXEC dial.

If the write-protect tab on the "Memory Stick" is set to LOCK
You cannot write print marks on still images.

When the auto logo insert function is activated
You cannot use this function.

Compatibility of DVCAM and DV formats

DVCAM format is developed as a more reliable and higher end format than consumer DV format. Here explained are the differences, compatibility, and limitations on editing about DVCAM and DV formats.

Differences between DVCAM and DV formats

Item	DVCAM	DV
Track pitch	15 µm	10 µm
Audio sampling frequency	12 bit: 32 kHz 16 bit: 48 kHz	12 bit: 32 kHz 16 bit: 32 kHz, 44.1 kHz, 48 kHz
Audio recording mode [1]	Lock mode	Unlock mode

[1] There are two modes for audio recording, lock mode and unlock mode. In lock mode, the sampling frequencies of audio and video are synchronized. In unlock mode, which consumer DV format adopts, the two sampling frequencies are independent. Therefore, lock mode is more effective than unlock mode in digital processing and smooth transition during audio editing.

Mini DVCAM and mini DV cassettes

Both mini DVCAM and mini DV cassettes can be used on mini DVCAM or mini DV video equipment. The recording format of picture is defined according to recorder's format as described below.

Recorder's format	Cassette's format	Recording format
DVCAM	DVCAM	DVCAM
	DV	DVCAM
DV	DVCAM	DV
	DV	DV

This digital camcorder complies with DVCAM format. Though mini DV cassettes can be used for recording, we recommend you to use mini DVCAM cassettes to get the most out of high reliability of DVCAM format. The recording time of mini DV cassettes is 2/3 shorter than that indicated on the mini DV cassettes.

Compatibility on playback

Some tapes cannot be played back on mini DVCAM or mini DV video equipment.

Tape	On DV video equipment	On DVCAM video equipment
DV-formatted	Can be played back	Can be played back (only when recorded in SP mode)
DVCAM-formatted	Some equipment may be able to play back	Can be played back

Compatibility on editing using DV connectors

When this digital camcorder is connected to other DVCAM or DV video equipment using DV connectors, the recording format of edited tapes is defined according to recorder's format as described below.

Source tape	Player's format	Recorder's format	Recording format
DVCAM-formatted [2)3)]	DVCAM	DVCAM	DVCAM
DVCAM-formatted	DVCAM	DV	DV [4)]
DVCAM-formatted [2)]	DV [5)]	DVCAM	DVCAM [7)]
DVCAM-formatted	DV [5)]	DV	DV [4)]
DV-formatted [6)]	DVCAM	DVCAM	DVCAM [1)]
DV-formatted [6)]	DVCAM	DV	DV
DV-formatted	DV	DVCAM	DVCAM [1)]
DV-formatted	DV	DV	DV

[1] When using the mini DVCAM video equipment to carry out DV dubbing of a tape recorded in DV format, the tape produced will be in DVCAM format as follows:
– Audio recording mode will be unlock mode.
– The time code format will be partly maladjusted. (There will be no effect on the recorded picture except in certain case.)
[2] If the tape is to be dubbed is DVCAM formatted tape as in 1), the tape produced will be in DVCAM format as follows:
– Audio recording mode will be unlock mode.
– The time code format will be partly maladjusted.
[3] Depending on signal conditions of the source tape, you may not be able to edit the tape using the DV connectors.
[4] Audio recording mode of the edited tape is lock mode.
[5] Some mini DV video equipment may be able to play back a DVCAM-formatted tape. Even if the tape is played back, contents of the playback cannot be guaranteed.
[6] DV-formatted tapes recorded in SP mode only can be used as source tapes.
[7] Depending on model of video equipment, you may not be able to edit.

Limitations on editing

You will find the following limitations when editing.
- Due to the difference of a track pitch, you cannot record or edit on DV-formatted tapes using mini DVCAM video equipment.
- Depending on signal conditions, you may not be able to record or edit on DVCAM-formatted tapes.

In these cases, do the following:
- Edit using audio/video jacks.
- Dub a DV-formatted tape using audio/video jacks, then use the dubbed tape as a source tape.

Usable cassettes

Selecting cassette types

You can use the DVCAM mini DVCAM cassette* and mini DV cassette* in this camcorder. You cannot use any other DV, 8 mm, Hi8, Digital 8, VHS, S-VHS, VHSC, S-VHSC, Betamax or ED Betamax cassette.

* There are two types of mini DVCAM/mini DV cassettes: with cassette memory and without cassette memory. Tapes with cassette memory have C/M (Cassette Memory) mark. Sony recommends that you use a tape with C/M mark to enjoy your camcorder fully.

The IC memory is built in the cassette with cassette memory. Using this IC memory, your camcorder can read, write, and search data such as the date of recording or titles. The functions using the cassette memory require successive signals recorded on the tape. If the tape has a blank portion in the beginning or between the recorded portions, a title may not be displayed properly or the search functions may not work correctly. Not to make any blank portion on the tape, press END SEARCH to return to the end of the recorded portion before you begin the next recording when:
– You have ejected the cassette while recording.
– You have played back the tape in VCR mode.
If there is a blank portion or discontinuous signal on your tape, re-record from the beginning to the end of the tape concerning above.
When you record, using a digital video camera recorder without a cassette memory function, on a tape recorded by one with the cassette memory function, the same result may occur.

C/M 16K mark on the cassette
The memory capacity of tapes marked with C/M 16K is 16Kb. Your camcorder can accommodate up to 16Kb.

The maximum number of data recordable on cassette memory (when using 16 Kb cassette memory)

Data	Numbers
INDEX	135
TITLE	106
DATE	24 (10 bytes/1 data)
PHOTO	48 (10 bytes/1 data)
CASSETTE LABEL	1 (6 bytes/1 data)

Copyright signal

When you play back
When you connect your camcorder to any other video camera recorder to dub a tape that has recorded copyright control signals for copyright protection, you may not record the tape that played back on your camcorder.

When you record
You cannot record software on your camcorder that contains copyright control signals for copyright protection of software.
"COPY INHIBIT" appears on the LCD screen, in the viewfinder or on the TV screen if you try to record such software.
Your camcorder does not record copyright control signals on the tape when it records.

Audio mode

Fs32K (12-bit) mode: The original sound can be recorded in channels 1 and 2, and the new sound in channels 3 and 4 in 32 kHz. The balance between channels 1/2 and channels 3/4 can be adjusted by selecting AUDIO MIX in the menu settings during playback and audio dubbing. Both sounds can be played back. You can monitor the sound during audio dubbing.
Fs48K (16-bit) mode: A new sound cannot be recorded but the original sound can be recorded in high quality. The audio mode can be indicated on the LCD screen or in the viewfinder.
You may not add a sound on a DVCAM-formatted tape which does not comply with the condition of the DVCAM format as described on page 140 or when you recorded on a DV-formatted tape. In this case, "NS" appears on the LCD screen or in the viewfinder.

Notes on the mini DVCAM/mini DV cassette

When affixing a label on the mini DVCAM/mini DV cassette

Be sure to affix a label only on the locations as illustrated below **[a]** so as not to cause malfunction of your camcorder.

After using the mini DVCAM/mini DV cassette

Rewind the tape to the beginning, put the cassette in its case, and store it in an upright position.

If the cassette memory function does not work

Reinsert a cassette a few times. The gold-plated connector of mini DVCAM/mini DV cassettes may be dirty or dusty.

Cleaning the connector

If the gold-plated connector of mini DVCAM/mini DV cassettes is dirty or dusty, you may not operate the function using cassette memory. Clean up the gold-plated connector with cotton-wool swab, about every 10 times ejection of a cassette. **[b]**

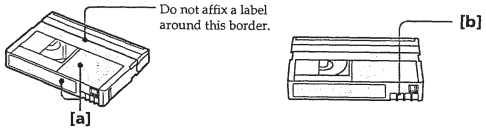

About i.LINK

Your camcorder is equipped with the DV input/output connector based on i.LINK (IEEE1394) standard.
This section explains the specifications and features of i.LINK.

What is i.LINK?
i.LINK is a digital serial interface designed to integrate the devices equipped with i.LINK connector. By connecting i.LINK devices, i.LINK allows your device to:
– Transmit and receive data such as digital audio and digital video signals in two ways
– Control other i.LINK devices
– Easily connect with another device using just an i.LINK cable.
Your i.LINK device is capable of connecting AV devices and perform various operations and data transfer. Further availability for connections with versatile equipment and operations will be planned in the future.
Other advantages include the following feature. When connecting multiple i.LINK devices, your device cannot only perform operations and data transfer with the directly connected device but also perform them with any of the devices that are connected via other devices. Therefore, you will not need to concern the order of connecting devices. However, depending on the features and specifications of the connected devices, you may need to operate certain functions differently or may not be able to perform certain operations or data transfer.

Note
Your camcorder can be connected to one device with the i.LINK cable (DV cable).
When you connect with a device that has two or more i.LINK connectors, refer to the operating instructions supplied with the connected device.

Tips
- i.LINK, a nickname for IEEE 1394 that Sony proposed, is a trademark supported by a majority of companies worldwide.
- IEEE 1394 is an international standard defined by IEEE, The Institute of Electrical and Electronics Engineers, Inc.

About data transfer speed of i.LINK
i.LINK defines a maximum data transfer speed of approximately 100, 200 and 400 Mbps* that are described as S100, S200 and S400 respectively.
For i.LINK devices, a maximum data transfer speed that the device supports is identified on "specifications" page of the operating instructions supplied with the device or near its i.LINK connector.
With a device that does not identify the data transfer speed, the maximum data transfer speed that the device supports is S100.
When connecting with the device that support different data transfer speed, the actual data transfer speed may be different from those described on the i.LINK connectors.

***What is Mbps?**
Mega bits per second. A measure of the rate at which data is transmitted per second. In case of 100 Mbps, 100 Mega bits of data can be transmitted per second.

i. LINK operation with your camcorder
For details on dubbing your camcorder to your VCR equipped with DV input/output connector , see pages 73, 83.
Your camcorder is available for use with other devices equipped with Sony i.LINK (DV) connector.
For details on connection with i.LINK cable and necessary software, refer to the operating instructions supplied with the connected device.

Use Sony i.LINK cables
Use Sony i.LINK cables to connect the i.LINK devices.
4 pins ←→ 4 pins (For dubbing)

i.LINK and i are trademarks.

Troubleshooting

If you run into any problem using your camcorder, use the following table to troubleshoot the problem. If the problem persists, disconnect the power source and contact your Sony dealer or local authorized Sony service facility. If "C:□□:□□" appears on the LCD screen, display window or in the viewfinder, the self-diagnosis display function has worked. See page 151.

In the recording mode

Symptom	Cause and/or Corrective Actions
START/STOP does not operate.	• The POWER switch is not set to CAMERA. → Set it to CAMERA. (p. 16) • The tape has run out. → Rewind the tape or insert a new one. (p. 15, 29) • The write-protect tab on the cassette is set to expose the red mark. → Use a new tape or slide the tab. (p. 15) • The auto logo insert function is activated. → Refer to the operating instructions (for the auto logo insert function) supplied with this camcorder. • The tape is stuck to the drum (moisture condensation). → Remove the cassette and leave your camcorder for at least one hour to acclimatize. (p. 155)
The power goes off.	• The battery pack is dead or nearly dead. → Install a charged battery pack. (p. 10, 11)
The image on the viewfinder screen is not clear.	• The viewfinder lens is not adjusted. → Adjust the viewfinder lens. (p. 20)
The SteadyShot function does not work.	• STEADYSHOT is set to OFF in the menu settings. → Set it to ON. (p. 104)
The autofocusing function does not work.	• The camcorder is in manual focus mode. → Turn to auto focus mode. (p. 58) • Shooting conditions are not suitable for autofocus. → Adjust focus manually. (p. 58)
The fader function does not work.	• The digital effect function is working. → Cancel it. (p. 39)
A vertical band appears when you shoot a subject such as lights or a candle flame against a dark background.	• The contrast between the subject and background is too high. This is not a malfunction.
Vertical streaks appear when you shoot a very bright subject.	• This is called the smear phenomenon. This is not a malfunction.

(continued on the following page)

Troubleshooting

Symptom	Cause and/or Corrective Actions
Some tiny white spots appear on the LCD screen or in the viewfinder.	• When the shutter speed is too low.
The click of the shutter does not sound.	• BEEP is set to OFF in the menu settings. → Set it to MELODY or NORMAL. (p. 104)
The image is not bright even if you use the video flash light.	• The ND FILTER selector is set to 1 or 2. → Set it to OFF. (p. 46) • The manual adjustment is not suitable for the situations. (The ⚡ indicator flashes.) → Set the AUTO LOCK selector to AUTO LOCK, or cancel the manual adjustment. (p. 42)

In the playback mode

Symptom	Cause and/or Corrective Actions
The tape does not move when a video control button is pressed.	• The POWER switch is not set to VCR. → Set it to VCR. (p. 26)
The playback button does not function.	• The tape has run out. → Rewind the tape. (p. 29)
There are horizontal lines on the picture or the playback picture is not clear or does not appear.	• The video head may be dirty. → Clean the heads using the Sony DVM12CL cleaning cassette (not supplied). (p. 156)
No sound or only a low sound is heard when playing back a tape.	• The volume is turned to minimum. → Turn up the volume. (p. 26) • AUDIO MIX is set to the CH3/4 side in the menu settings. → Adjust AUDIO MIX. (p. 104)
The title search function does not work.	• The tape has no cassette memory. → Use a tape with cassette memory. (p. 66, 142) • CM SEARCH is set to OFF in the menu settings. → Set it to ON. (p. 104) • There is no title in the tape. → Superimpose the titles. (p. 94) • The tape has a blank portion in the recorded portion. (p. 66)

Troubleshooting

Symptom	Cause and/or Corrective Actions
Displaying the recorded date, date search function does not work.	• The tape has no cassette memory. → Use a tape with cassette memory. (p. 67, 142) • CM SEARCH is set to OFF in the menu settings. → Set it to ON. (p. 104) • The tape has a blank portion in the recorded portion. (p. 68)
The new sound now being added, or that has been added to the recorded tape is not heard.	• AUDIO MIX is set to the CH1/2 side in the menu settings. → Set it to the side you want to monitor. (p. 104)
The title is not displayed.	• TITLE DSPL is set to OFF in the menu settings. → Set it to ON. (p. 104)
The sound is muted or images do not appear when monitoring images through TV.	→ Pull out the A/V connecting cable from the AUDIO CH1/CH2 and VIDEO jacks, then connect it again.

In the recording and playback modes

Symptom	Cause and/or Corrective Actions
The power does not turn on.	• The battery pack is not installed, or is dead or nearly dead. → Install a charged battery pack. (p. 10, 11) • The AC power adaptor is not connected to mains. → Connect the AC power adaptor to mains. (p. 14)
The end search function does not work.	• The tape was ejected after recording when using a tape without cassette memory. (p. 25, 29) • You have not recorded on the new cassette yet. (p. 25, 29)
The end search function does not work correctly.	• The tape has a blank portion in the beginning or middle. (p. 25)
The picture does not appear in the viewfinder.	• The LCD panel is open. → Close the LCD panel. (p. 18)
The battery pack is quickly discharged.	• The operating temperature is too low. • The battery pack is not fully charged. → Charge the battery pack fully. (p. 11) • The battery pack is completely dead, and cannot be recharged. → Replace with a new battery pack. (p. 10)
The battery remaining indicator does not indicate the correct time.	• You have used the battery pack in an extremely hot or cold environment for a long time. • The battery pack is completely dead, and cannot be recharged. → Replace with a new battery pack. (p. 10) • The battery is dead. → Use a full-charged battery pack. (p. 10, 11)

(continued on the following page)

Symptom	Cause and/or Corrective Actions
The cassette cannot be removed from the holder.	• The power source is disconnected. → Connect it firmly. (p. 11, 14) • The battery is dead. → Use a charged battery pack. (p. 10, 11)
The ⊡ and ⏏ indicators flash and no functions except for cassette ejection work.	• Moisture condensation has occurred. → Remove the cassette and leave your camcorder for at least one hour to acclimatize. (p. 155)
CM indicator does not appear when using a tape with cassette memory.	• The gold-plated connector of the tape is dirty or dusty. → Clean the gold-plated connector. (p. 143)
Remaining tape indicator is not displayed.	• The REMAIN is set to AUTO in the menu settings. → Set it to ON to always display the remaining tape indicator. (p. 104)

When operating using the "Memory Stick"

Symptom	Cause and/or Corrective Actions
Operations do not function.	• The POWER switch is set to CAMERA or OFF (CHG). → Set it to MEMORY or VCR. • The "Memory Stick" is not inserted. → Insert a "Memory Stick." (p. 115) • The auto logo insert function is activated. → Refer to the extra operating instructinos (for Auto Logo Insert).
Recording does not function.	• The "Memory Stick" has already been recorded to its full capacity. → Erase unnecessary images and record again. (p. 118, 136) • The "Memory Stick" formatted incorrectly is inserted. → Format the "Memory Stick" or use another "Memory Stick." (p. 108) • The write-protect tab on the "Memory Stick" is set to LOCK. → Set the tab to write. (p. 113)
The image cannot be deleted.	• The image is protected. → Cancel image protection. (p. 135) • The write-protect tab on the "Memory Stick" is set to LOCK. → Set the tab to write. (p. 113)
You cannot format the "Memory Stick."	• The write-protect tab on the "Memory Stick" is set to LOCK. → Set the tab to write. (p. 113)
Deleting all the images cannot be carried out.	• The write-protect tab on the "Memory Stick" is set to LOCK. → Set the tab to write. (p. 113)
You cannot protect the image.	• The write-protect tab on the "Memory Stick" is set to LOCK. → Set the tab to write. (p. 113) • The image to be protected is not being played back. → Press MEMORY PLAY to play back the image. (p. 129)
You cannot write a print mark on the still image.	• The write-protect tab on the "Memory Stick" is set to LOCK. → Set the tab to write. (p. 113) • The image that you will write a print mark is not being played back. → Press MEMORY PLAY to play back the image. (p. 129)

Symptom	Cause and/or Corrective Actions
The photo save function does not work.	• The write-protect tab on the "Memory Stick" is set to LOCK. → Set the tab to write. (p. 113) • The battery pack is dead. → Install a charged battery pack or use the AC power adaptor instead of the battery pack. (p. 10, 14)

Others

Symptom	Cause and/or Corrective Actions
The title is not recorded.	• The tape has no cassette memory. → Use a tape with cassette memory. (p. 94, 142) • The cassette memory is full. → Erase unnecessary title. (p. 97) • The tape is set to prevent accidental erasure. → Slide the write-protect tab so that red portion is not visible. (p. 15) • Nothing is recorded in that position on the tape. → Superimpose the title to the recorded position. (p. 95)
The cassette label is not recorded.	• The tape has no cassette memory. → Use a tape with cassette memory. (p. 100, 142) • The cassette memory is full. → Erase some data. (p. 102) • The tape is set to prevent accidental erasure. → Slide the write-protect tab so that red portion is not visible. (p. 15)
While editing using the i.LINK cable (DV connecting cable), recording picture cannot be monitored.	→ Disconnect the i.LINK cable (DV connecting cable), and connect it again. (p. 73)
Digital program editing does not function.	• The input selector on the VCR is not set correctly. → Check the connection and set up the selector position. (p. 72) • Setting program on a blank portion of the tape is attempted. → Set the program again on a recorded portion. (p. 78) • Your camcorder and the VCR are not synchronized. → Synchronize them. (p. 75)

(continued on the following page)

Symptom	Cause and/or Corrective Actions
The Remote Commander supplied with your camcorder does not work.	• COMMANDER is set to OFF in the menu settings. → Set it to ON. (p. 104) • Something is blocking the infrared rays. → Remove the obstacle. • The batteries are inserted in the battery holder with the + – polarities incorrectly. → Insert the batteries with the correct polarity. (p. 168) • The batteries are dead. → Insert new ones. (p. 168)
The picture from a TV or VCR does not appear even when your camcorder is connected to outputs on the TV or VCR.	• DISPLAY is set to V-OUT/LCD in the menu settings. → Set it to LCD. (p. 104)
The melody or beep sounds for five seconds.	• Moisture condensation has occurred. → Remove the cassette and leave your camcorder for at least one hour to acclimatize. (p. 155) • Some troubles have occurred in your camcorder. → Remove the cassette and insert it again, then operate your camcorder.
When charging the battery pack, no indicator appears or the indicator flashes in the display window.	• The AC power adaptor is disconnected. → Connect it properly. • The battery pack malfunctions. → Contact your Sony dealer or local authorized Sony service facility.
You cannot charge the battery pack.	• The POWER switch is not set to OFF (CHG). → Set it to OFF (CHG).
The camcorder is immediately turned off even if the amount of the battery remaining time is enough to operate.	→ Charge the battery pack fully again. The correct remaining time is displayed.
No function works though the power is on.	• Disconnect the mains lead of the AC power adaptor or remove the battery, then reconnect it after about one minute. Turn the power on. If the functions still do not work, press the RESET button located at the lower-right of the ZEBRA selector using a sharp-pointed object. (If you press the RESET button, all the settings including the date and time return to the default.) (p. 14, 162)

Self-diagnosis display

Your camcorder has a self-diagnosis display function.
This function displays the current condition of your camcorder as a 5-digit code (a combination of a letter and figures) on the LCD screen, display window, or in the viewfinder. If a 5-digit code is displayed, check the following code chart. The last two digits (indicated by □□) will differ depending on the state of your camcorder.

On the LCD screen or in the viewfinder, on the display window

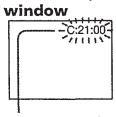

Self-diagnosis display
• C:□□:□□
You can service your camcorder yourself.
• E:□□:□□
Contact your Sony dealer or nearest local authorized Sony service facility.

Five-digit display	Cause and/or Corrective Actions
C:04:□□	• You are using a battery pack that is not an "InfoLITHIUM" battery pack. → Use an "InfoLITHIUM" battery pack. (p. 11)
C:21:□□	• Moisture condensation has occurred. → Remove the cassette and leave your camcorder for at least one hour to acclimatize. (p. 155)
C:22:□□	• The video heads are dirty. → Clean the heads using the Sony DVM12CL cleaning cassette (not supplied). (p. 156)
C:31:□□ C:32:□□	• A malfunction other than the above. → Remove the cassette and insert it again, then operate your camcorder. → Disconnect the mains lead of the AC power adaptor or remove the battery pack. After reconnecting the power source, operate your camcorder.
E:61:□□ E:62:□□	• A malfunction that you cannot service has occurred. → Contact your Sony dealer and inform them of the 5-digit code. (example: E:61:10)

If you are unable to rectify the problem even if you try corrective actions a few times, contact your Sony dealer or nearest local authorized Sony service facility.

Warning indicators and messages

If indicators and messages appear on the LCD screen or in the viewfinder, check the following:
See the page in parentheses "( )" for more information.

Warning indicators

The battery is dead or nearly dead
Slow flashing:
- The battery is nearly dead.
  Depending on conditions, the indicator may flash, even if there are five to 10 minutes remaining.

Fast flashing:
- The battery is dead (p. 11).
- The battery is completely dead.

Warning indicator as to tape
Slow flashing:
- The tape is near the end.
- No tape is inserted (p. 15).*
- The write-protect tab on the cassette is out (red) (p. 15).*

Fast flashing:
- The tape has run out (p. 29).*

You need to eject the cassette
Slow flashing:
- The write-protect tab on the cassette is out (red) (p. 15).*

Fast flashing:
- Moisture condensation has occurred (p. 155).*
- The tape has run out (p. 29).*
- The self-diagnosis display function is activated (p. 151).*

Moisture condensation has occurred*
Fast flashing:
- Eject the cassette, turn off your camcorder, and leave it for about one hour with the cassette compartment open (p. 155).

Warning indicator as to cassette memory
Slow flashing:
- No tape with cassette memory is inserted (p. 142).*

Self-diagnosis display (p. 151)

The still image is protected
Slow flashing:
- The still image is protected (p. 135).*

Warning indicator as to "Memory Stick"*
Slow flashing:
- No "Memory Stick" is inserted (p. 115).

Fast flashing:
- Unreadable "Memory Stick" is inserted (p. 115).

100-0001 "(Warning indicators) Memory Stick" file error*
Slow flashing:
- File is broken.
- File has no compatibility.

"Memory Stick" format error*
Fast flashing:
- There are two directories or more.
- Data is broken.
- "Memory Stick" is not formatted correctly (p. 108).

Warning messages

• CLOCK SET	Reset the date and time (p. 112).
• FOR "InfoLITHIUM" BATTERY ONLY	Use an "InfoLITHIUM" battery pack (p. 11).
• MEMORY FULL	The "Memory Stick" is full in photo save function (p. 128).
• CLEANING CASSETTE	The video heads are dirty (p. 156).**
• FULL	The tape cassette memory is full (p. 96).*
• 48K	AUDIO MODE is set to 48K.* You cannot dub new sound (p. 109).
• REC MODE	REC MODE is set to DV SP.* You cannot dub new sound (p. 109).
• TAPE	There is no recorded portion on the tape.* You cannot dub new sound (p. 87).
• "i.LINK" CABLE	i.LINK cable is connected (p. 88).* You cannot dub new sound.
• FULL	The "Memory Stick" is full (p. 120).*
•	The write-protect tab on the "Memory Stick" is set to LOCK (p. 113).*
• NO FILE	No still image is recorded on the "Memory Stick" (p. 129).*
• NO MEMORY STICK	No "Memory Stick" is inserted (p. 115).*
• MEMORY STICK ERROR	The "Memory Stick" data is corrupted (p. 115).*
• FORMAT ERROR	(p. 108)*
• DIRECTORY ERROR	(p. 130)*
• COPY INHIBIT	The tape contains copyright control signals for copyright protection of software (p. 142).*
• TAPE END	The tape has reached the end of the tape (p. 29).*
• NO TAPE	Insert a cassette tape (p. 15).*
• LOGO NOT INSERTED	The logo is not inserted properly, or the "Memory Stick" is not inserted that has the logo data. Check if the "Memory Stick" is inserted properly, or insert the "Memory Stick" with logo data.
• LOGO SYSTEM ERROR	The data setting of the logo insert system is corrupted. Consult your Sony dealer or local authorized Sony service facility.

* You hear the melody or beep sound.
** and the message appear alternately.

Using your camcorder abroad

Using your camcorder abroad

You can use your camcorder in any country or area with the AC power adaptor supplied with your camcorder within 100 V to 240 V AC, 50/60 Hz.

Your camcorder is a PAL system-based camcorder. If you want to view the playback picture on a TV, it must be a PAL system-based TV equipped with audio/video input jacks.

Check the following list.

PAL system
Australia, Austria, Belgium, China, Czech Republic, Denmark, Finland, Germany, Great Britain, Holland, Hong Kong, Italy, Kuwait, Malaysia, New Zealand, Norway, Portugal, Singapore, Slovak Republic, Spain, Sweden, Switzerland, Thailand, etc.

PAL-M system
Brazil

PAL-N system
Argentina, Paraguay, Uruguay

NTSC system
Bahama Islands, Bolivia, Canada, Central America, Chile, Colombia, Ecuador, Jamaica, Japan, Korea, Mexico, Peru, Surinam, Taiwan, the Philippines, the U.S.A., Venezuela, etc.

SECAM system
Bulgaria, France, Guyana, Hungary, Iran, Iraq, Monaco, Poland, Russia, Ukraine, etc.

Simple setting of clock by time difference

You can easily set the clock to the local time by setting a time difference. Select WORLD TIME in the menu settings. See page 104 for more information.

Maintenance information and precautions

Moisture condensation

If your camcorder is brought directly from a cold place to a warm place, moisture may condense inside your camcorder, on the surface of the tape, or on the lens. In this condition, the tape may stick to the head drum and be damaged or your camcorder may not operate correctly. If there is moisture inside your camcorder, the beep sounds and the indicator flashes. When the indicator flashes at the same time, the cassette is inserted in your camcorder. If moisture condenses on the lens, the indicator will not appear.

If moisture condensation occurred

None of the functions except cassette ejection will work. Eject the cassette, turn off your camcorder, and leave it for about one hour with the cassette compartment open. Your camcorder can be used again if the indicator does not appear when the power is turned on again.

Note on moisture condensation
Moisture may condense when you bring your camcorder from a cold place into a warm place (or vice versa) or when you use your camcorder in a hot place as follows:
- You bring your camcorder from a ski slope into a place warmed up by a heating device.
- You bring your camcorder from an air-conditioned car or room into a hot place outside.
- You use your camcorder after a squall or a shower.
- You use your camcorder in a high temperature and humidity place.

How to prevent moisture condensation
When you bring your camcorder from a cold place into a warm place, put your camcorder in a plastic bag and tightly seal it. Remove the bag when the air temperature inside the plastic bag has reached the surrounding temperature (after about one hour).

Removing Dust from Inside the Viewfinder

Before cleaning, remove the sticker below the viewfinder lens adjustment lever.
(1) While holding down the hook ❶, slide the eyecup in the direction of the arrow and remove it out ❷.
(2) Clean the surface with a commercially available blower.

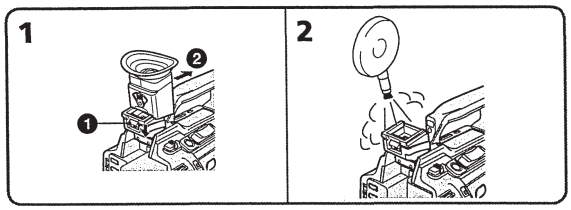

To reattach the eyecup
Do step 1 above sliding the eyecup in the reverse direction of the arrow.

Maintenance information

Cleaning the video head
To ensure normal recording and clear pictures, clean the video heads. The video head may be dirty when:
- mosaic-pattern noise appears on the playback picture.
- playback pictures do not move.
- playback pictures do not appear.
- the ⊗ indicator and "CLEANING CASSETTE" message appear one after another on the LCD screen or in the viewfinder.

If the above problem, **[a]** or **[b]** occurs, clean the video heads for 10 seconds with the Sony DVM12CL cleaning cassette (not supplied). Check the picture and if the above problem persists, repeat cleaning.

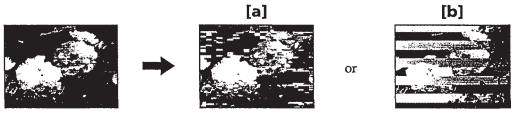

Cleaning the LCD screen
If fingerprints or dust make the LCD screen dirty, we recommend using a LCD Cleaning Cloth (not supplied) to clean the LCD screen.

Charging the vanadium-lithium battery in your camcorder

Your camcorder is supplied with a vanadium-lithium battery installed so as to retain the date and time, etc., regardless of the setting of the POWER switch. The vanadium-lithium battery is always charged as long as you are using your camcorder. The battery, however, will get discharged gradually if you do not use your camcorder. It will be completely discharged in about four months if you do not use your camcorder at all. Even if the vanadium-lithium battery is not charged, it will not affect the camcorder operation. To retain the date and time, etc., charge the battery if the battery is discharged.

Charging the vanadium-lithium battery:
- Connect your camcorder to mains using the AC power adaptor supplied with your camcorder, and leave your camcorder with the POWER switch turned off for more than 24 hours.
- Or install the fully charged battery pack in your camcorder, and leave your camcorder with the POWER switch turned off for more than 24 hours.

Precautions

Camcorder operation
- Operate your camcorder on 7.2 V (battery pack) or 8.4 V (AC power adaptor).
- For DC or AC operation, use the accessories recommended in this operating instructions.
- If any solid object or liquid get inside the casing, unplug your camcorder and have it checked by a Sony dealer before operating it any further.
- Avoid rough handling or mechanical shock. Be particularly careful of the lens.
- Keep the POWER switch set to OFF (CHG) when you are not using your camcorder.
- Do not wrap your camcorder with a towel, for example, and operate it. Doing so might cause heat to build up inside.
- Keep your camcorder away from strong magnetic fields or mechanical vibration. Noise may appear on the image.
- Do not touch the LCD screen with a sharp-pointed object.
- If your camcorder is used in a cold place, a residual image may appear on the LCD screen. This is not a malfunction.
- While using your camcorder, the back of the LCD screen may heat up. This is not a malfunction.

On handling tapes
- Do not insert anything into the small holes on the rear of the cassette. These holes are used to sense the type and thickness of the tape and if the recording tab is in or out.
- Do not open the tape protect cover or touch the tape.
- Avoid touching or damaging the terminals. To remove dust, clean the terminals with a soft cloth.

Camcorder care
- Remove the tape, and periodically turn on the power, operate the CAMERA and VCR sections and play back a tape for about three minutes when your camcorder is not to be used for a long time.
- Clean the lens with a soft brush to remove dust. If there are fingerprints on the lens, remove them with a soft cloth.
- Clean the camcorder body with a dry soft cloth, or a soft cloth lightly moistened with a mild detergent solution. Do not use any type of solvent which may damage the finish.

- Do not let sand get into your camcorder. When you use your camcorder on a sandy beach or in a dusty place, protect it from the sand or dust. Sand or dust may cause your camcorder to malfunction, and sometimes this malfunction cannot be repaired.

AC power adaptor
- Unplug the unit from the mains when you are not using the unit for a long time. To disconnect the mains lead, pull it out by the plug. Never pull the mains lead itself.
- Do not operate the unit with a damaged mains lead or if the unit has been dropped or damaged.
- Do not bend the mains lead forcibly, or place a heavy object on it. This will damage the mains lead and may cause fire or electrical shock.
- Prevent metallic objects from coming into contact with the metal parts of the connecting section. If this happens, a short may occur and the unit may be damaged.
- Always keep metal contacts clean.
- Do not disassemble the unit.
- Do not apply mechanical shock or drop the unit.
- While the unit is in use, particularly during charging, keep it away from AM receivers and video equipment. AM receivers and video equipment disturb AM reception and video operation.
- The unit becomes warm during use. This is not a malfunction.
- Do not place the unit in locations that are:
  - Extremely hot or cold
  - Dusty or dirty
  - Very humid
  - Vibrating

Battery pack
- Use only the specified charger or video equipment with the charging function.
- To prevent accident from a short circuit, do not allow metal objects to come into contact with the battery terminals.
- Keep the battery pack away from fire.
- Never expose the battery pack to temperatures above 60 °C (140 °F), such as in a car parked in the sun or under direct sunlight.
- Keep the battery pack dry.
- Do not expose the battery pack to any mechanical shock.
- Do not disassemble nor modify the battery pack.
- Attach the battery pack to video equipment securely.
- Charging while some capacity remains does not affect the original battery capacity.
- The battery pack is not resistant to water. Do not wet the battery pack.
- Unless you use the battery pack for a long period, store the battery pack after you charge it fully and use it completely once a year.
- Store the battery pack in a cool, dry place.

Notes on dry batteries
To avoid possible damage from battery leakage or corrosion, observe the following:
- Be sure to insert the batteries with the + – polarities matched to the + – marks.
- Dry batteries are not rechargeable.
- Do not use a combination of new and old batteries.
- Do not use different types of batteries.
- Current flows from batteries when you are not using them for a long time.
- Do not use leaking batteries.

If batteries are leaking
- Wipe off the liquid in the battery compartment carefully before replacing the batteries.
- If you touch the liquid, wash it off with water.
- If the liquid get into your eyes, wash your eyes with a lot of water and then consult a doctor.

If any problem occurs, unplug your camcorder and contact your nearest Sony dealer.

Identifying the parts and controls

Camcorder

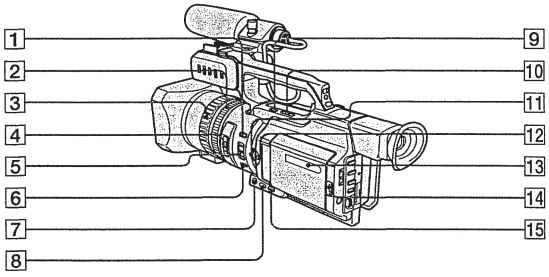

1 **INDEX MARK button** (p. 63)
2 **Zoom ring** (p. 21)
3 **Focus ring** (p. 58)
4 **ND FILTER selector** (p. 46)
5 **Focus selector** (p. 58)
6 **PUSH AUTO button** (p. 58)
7 **FADER button** (p. 38)
8 **BACK LIGHT button** (p. 23)
9 **END SEARCH button** (p. 25)
10 **EDITSEARCH buttons** (p. 25)
11 **IRIS dial** (p. 43)
12 **IRIS button** (p. 43)
13 **Display window** (p. 168)
14 **OPEN button** (p. 16, 26)
15 **SPOT LIGHT button** (p. 24)

This mark indicates that this product is a genuine accessory for Sony video products.
When purchasing Sony video products, Sony recommends that you purchase accessories with this "GENUINE VIDEO ACCESSORIES" mark.

DVCAM Mini DV Digital Video Cassette CIII Cassette Memory

These are trademarks of Sony corporation.

Identifying the parts and controls

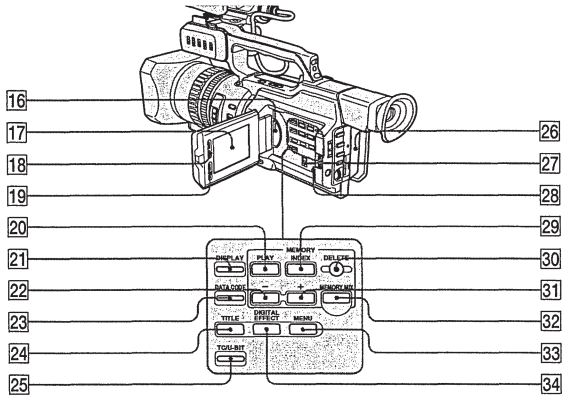

16 **Speaker**
17 **LCD screen** (p. 18)
18 **LCD BRIGHT buttons** (p. 19)
19 **VOLUME buttons** (p. 26)
20 **MEMORY PLAY button** (p. 129)
21 **DISPLAY button** (p. 27)
22 **MEMORY – button** (p. 122, 129)
23 **DATA CODE button** (p. 28)
24 **TITLE button** (p. 94)
25 **TC/U-BIT button** (p. 93)
26 **Battery pack** (p. 10)
27 **ZEBRA selector** (p. 47)
28 **RESET button** (p. 150)
29 **MEMORY INDEX button** (p. 130)
30 **MEMORY DELETE button** (p. 136)
31 **MEMORY + button** (p. 122, 129)
32 **MEMORY MIX button** (p. 122)
33 **MENU button** (p. 104)
34 **DIGITAL EFFECT button** (p. 39)

Identifying the parts and controls

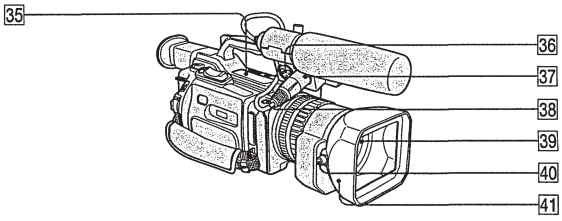

35 **Video control buttons** (p. 26, 29, 83)
II▶ SLOW (slow playback)
AUDIO DUB (dubbing)
■ STOP (stop)
◀◀ REW (rewind)
▶ PLAY (playback)
▶▶ FF (Fast-forward)
II PAUSE (pause)
● REC (recording)
The control buttons light up when you set the POWER switch to VCR.
36 **INPUT2 connector** (p. 55)
37 **INPUT1 connector** (p. 9)
38 **REC START/STOP** (p. 16)
39 **Lens**
40 **Lens hood fixing screw**
41 **Lens hood**
You can attach a wide teleconversion lens (not supplied) by removing the lens hood.

Removing the lens hood
To remove the lens hood for attachment of the wide teleconversion lens, etc., loosen the lens hood fixing screw, and unscrew the lens hood counterclockwise.

When using additional filters
We recommend that you use the Sony made filters having the genuine accessory mark.

Identifying the parts and controls

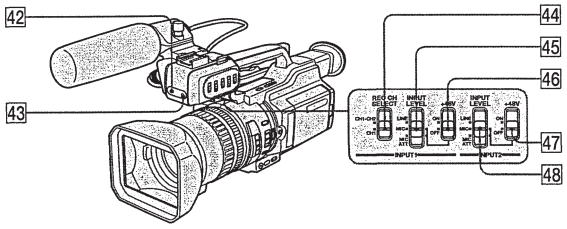

42 **Remote sensor**
43 **Camera recording lamp** (p. 16)
44 **INPUT1 REC CH SELECT switch** (p. 9)
45 **INPUT1 INPUT LEVEL selector** (p. 9)
46 **INPUT1 +48 V switch** (p. 9)
47 **INPUT2 +48 V switch** (p. 9)
48 **INPUT2 INPUT LEVEL selector** (p. 55)

Identifying the parts and controls

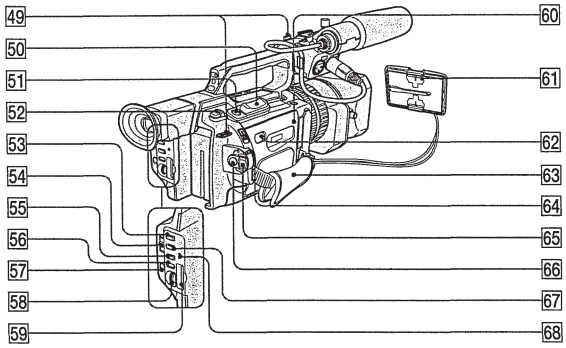

49 **Hooks for shoulder strap**
50 **Power zoom lever** (p. 21)
51 **PHOTO button** (p. 32, 118)
52 **BATT (battery) RELEASE lever** (p. 10)
53 **GAIN button** (p. 44)
54 **AUTO LOCK selector** (p. 42)
55 **WHT BAL button** (p. 50)
56 **AE SHIFT button** (p. 49)
57 **AUDIO LEVEL button** (p. 53)
58 **SEL/PUSH EXEC dial** (p. 104)
59 **"Memory Stick" slot** (p. 115)
60 **Cassette lid** (p. 15)
61 **Hood cap** (p. 16)
62 **PUSH button** (p. 15)
63 **Grip strap**
64 **LOCK switch** (p. 16)
65 **POWER switch** (p. 16)
66 **START/STOP button** (p. 16)
67 **SHUTTER SPEED button** (p. 45)
68 **Access lamp** (p. 115)

Fastening the grip strap

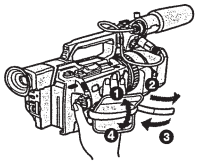

Fasten the grip strap firmly.

Attaching the shoulder strap
Attach the shoulder strap supplied with your camcorder to the hooks for the shoulder strap.

Identifying the parts and controls

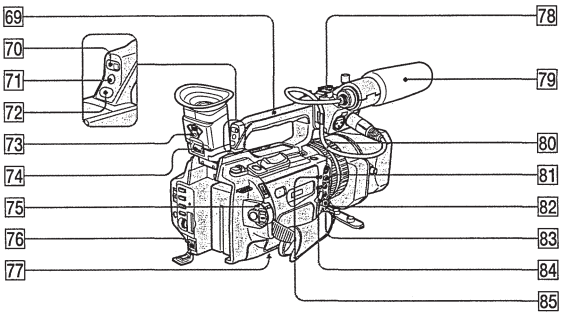

69 **Carrying handle**
70 **Remote sensor**
71 **Camera recording lamp** (p. 16)
72 **CUSTOM PRESET button** (p. 56)
73 **Viewfinder lens adjustment lever** (p. 20)
74 **Hook for removing the viewfinder** (p. 156)
75 **EJECT switch** (p. 15)
76 **DC IN jack** (p. 11)
77 **Tripod receptacle**
Make sure that the length of the tripod screw is less than 6.5 mm (9/32 inch). Otherwise, you cannot attach the tripod securely and the screw may damage your camcorder.
78 **Accessory shoe**
79 **Microphone** (p. 9)
80 **S VIDEO jack** (p. 31, 33, 72, 81, 125)
81 **VIDEO jack** (p. 31, 33, 72, 81, 125)
82 **AUDIO CH1/CH2 jack** (p. 31, 72, 81, 86)
83 **i DV IN/OUT jack** (p. 73, 83, 126)
This "i.LINK" mark is a trademark of Sony Corporation and indicates that this product is in agreement with IEEE 1394-1995 specifications and their revisions.

The i DV IN/OUT jack is i.LINK compatible.
84 **LANC jack**
LANC stands for Local Application Control Bus System. The LANC control jack is used for controlling the tape transport of video equipment and peripherals connected to it. This jack has the same function as the jack indicated as CONTROL L or REMOTE.
85 **(headphones) jack**
When you use headphones, the speaker on your camcorder is silent.

Identifying the parts and controls

Remote Commander

The buttons that have the same name on the Remote Commander as on your camcorder function identically to the buttons on your camcorder.

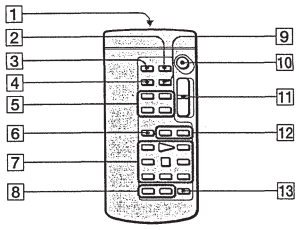

1 **Transmitter**
Point toward the remote sensor to control your camcorder after turning on your camcorder.
2 **ZERO SET MEMORY button**
This button does not function.
3 **PHOTO button** (p. 32, 118)
4 **DISPLAY button** (p. 27)
5 **Memory control buttons** (p. 122, 129)
6 **SEARCH MODE button** (p. 64, 66, 67, 69)
7 **Video control buttons** (p. 29)
8 **REC button** (p. 81)/**MARK button** (p. 78)
9 **DATA CODE button** (p. 28)
10 **START/STOP button** (p. 16)
11 **Power zoom button** (p. 21)
12 **⏮/⏭ buttons** (p. 64, 66, 67, 69)
13 **AUDIO DUB button** (p. 87)

Identifying the parts and controls

To prepare the Remote Commander

Insert two R6 (size AA) batteries by matching the + and − polarities on the batteries to the + − marks inside the battery compartment.

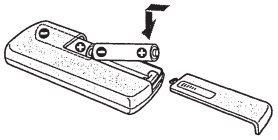

Notes on the Remote Commander
- Point the remote sensor away from strong light sources such as direct sunlight or overhead lighting. Otherwise, the Remote Commander may not function properly.
- Your camcorder works in the commander mode VTR 2. Commander modes 1, 2 and 3 are used to distinguish your camcorder from other Sony VCRs to avoid remote control misoperation. If you use another Sony VCR in the commander mode VTR 2, we recommend changing the commander mode or covering the sensor of the VCR with black paper.

Display window

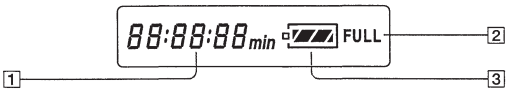

1 **Remaining battery time indicator** (p. 11)/**Memory counter** (p. 130)/**Time code indicator*** (p. 22)/**Self-diagnosis indicator** (p. 151)
2 **FULL charge indicator** (p. 11)
3 **Remaining battery indicator** (p. 11)

* The time code is displayed even if you switch the time code to user bits.

Operation indicators

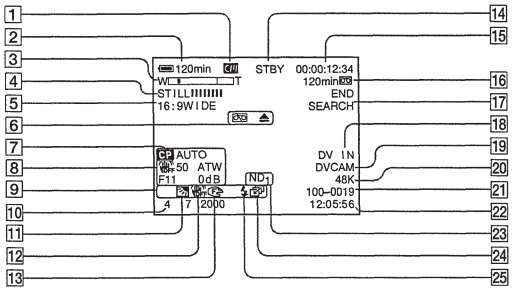

1. **Cassette memory indicator** (p. 142)
2. **Remaining battery time indicator** (p. 22)
3. **Zoom indicator** (p. 21)/**Data file name indicator** (p. 113)
4. **Digital effect indicator** (p. 39)/**FADER indicator** (p. 37)/**MEMORY MIX indicator** (p. 121)
5. **16:9WIDE indicator** (p. 36)/**PROG. SCAN indicator** (p. 34)
6. **Warning indicators** (p. 152)
7. **Custom preset indicator** (p. 56)
8. **Data code indicator** (p. 28)/**AE SHIFT indicator** (p. 49)/**GAIN indicator** (p. 44)/**IRIS indicator** (p. 43)
9. **LCD bright indicator** (p. 19)/**Volume indicator** (p. 26)
10. **Date indicator** (p. 28)
11. **Backlight indicator** (p. 23)/**Spot light indicator** (p. 24)
12. **SteadyShot OFF indicator** (p. 106)
13. **Manual focus/Infinity indicator** (p. 58)
14. **Standby/Recording indicator** (p. 16)/**Video control mode indicator** (p. 29)/
15. **Time code indicator** (p. 22)/**Self-diagnosis indicator** (p. 151)/**Photo mode indicator** (p. 32)/**Image number indicator** (p. 130)
16. **Remaining tape indicator** (p. 22)/**Memory playback indicator** (p. 130)/**FRAME REC indicator** (p. 61)/**Interval recording indicator** (p. 59)
17. **END SEARCH indicator** (p. 25)
18. **DV IN indicator** (p. 84)/**AV→DV OUT indicator**
19. **DVCAM format indicator**/**DV format SP mode indicator** (p. 22)
20. **Audio mode indicator** (p. 109)
21. **Data file name indicator**
    This indicator appears when the MEMORY MIX functions work.
22. **Audio input level**/**Time indicator** (p. 22)
23. **ND filter indicator** (p. 46)
24. **Continuous mode indicator** (p. 119)
25. **Video flash ready indicator**
    This indicator appears when you use the video flash light (not supplied).

Quick Function Guide

Functions to adjust exposure (in the recording mode)

• Shooting backlit subjects	BACK LIGHT (p. 23)
• In spotlight, such as at the theater or a formal event	Spotlight mode (p. 24)

Functions to give images more impact (in the recording mode)

• Smooth transition between scenes	FADER (p. 37)
• Taking a still picture	PHOTO (p. 32, 118)
• Digital processing of images	DIGITAL EFFECT (p. 39)
• Superimposing a title	TITLE (p. 94)

Functions to give a natural appearance to your recordings (in the recording mode)

• Preventing deterioration of picture quality in digital zoom	D ZOOM [MENU] (p. 104)
• Focusing manually	Manual focus (p. 58)

Functions to be used in editing (in the recording mode)

• Watching the picture on a wide-screen TV	Wide mode (p. 36)
• Viewing images using a personal computer	"Memory Stick" (p. 113)

Functions to be used after recording (in the playback mode)

• Digital processing of recorded images	DIGITAL EFFECT (p. 71)
• Displaying the date/time or various settings when you recorded	Data code (p. 28)
• Searching for scenes having a title	Title search (p. 66)
• Searching for scenes recorded in the photo mode	Photo search (p. 69)
• Scanning scenes recorded in the photo mode	Photo scan (p. 70)

You can insert the selected logo or mark on the moving picture being shot. For details, refer to the operating instructions (for the auto logo insert function) supplied with this camcorder.

This section is extracted from instruction manual.
(Auto Logo Insert for Copyright Protection)

Introduction – Auto Logo Insert

The auto logo insert function is designed for copyright protection. Using this function, a registered still image is always inserted on a moving picture to assure copywright protection.

Once you set the auto logo insert function to active:
- You can insert a still image recorded in a "Memory Stick" onto a moving picture.
- You cannot shoot if you remove the "Memory Stick" that the registered logo file is stored in.
- You need your password to deactivate this function.

You can secure a copyright of a picture shot by your camcorder on the functions above.

Before using this function

Do not forget your password!
If you forget your password, the memory of the camcorder must be formatted. There is a charge for it even if your camcorder is still under guarantee.

Do not remove the battery pack, the AC power adaptor, or the "Memory Stick" while registering the logo!
Otherwise, the "Memory Stick," image data, or setting information on the LOGO INS item may be damaged, and moreover, this will cause serious damage of the camcorder.

The following functions do not work when the auto logo insert function is active:
– Progressive mode
– Memory mix
– All the functions in memory mode
– Even though you set the POWER switch to MEMORY, the camcorder works in CAMERA mode
– All the functions that are used with the "Memory Stick" in VCR mode

Table of contents

Introduction – Auto Logo Insert 2
Preparing a logo file 3
Registering your password 4
Registering a still image to be used as a logo 6
Deactivating the auto logo insert function 9
Changing or resetting the setup 10
Precautions concerning the auto logo insert function 12

Preparing a logo file

To insert a logo file on a moving picture, there are two ways: one uses the luminancekey setting and the other uses the chroma setting.

Preparation 1 Creating a logo file

Create a logo file at 640 × 480 dots (VGA size).

Luminancekey (LUMINANCE)
Makes a brighter portion of a still image transparent, then records a moving picture on that portion. When you use luminancekey to insert a logo file, the background (transparent portion) of the logo file must be created in white, and the ratio setting of the RGB signal must be as follows: R=255, G=255, and B=255. If an image has a brighter portion other than the background, that portion may be transparent.
Chroma (CHROMA)
Makes a blue portion of a still image transparent, then records a moving picture on that portion. When you use chroma to insert a logo file, the background (transparent portion) of the logo file must be created in blue, and the ratio setting of an RGB signal must be as follows: R=0, G=0, and B=255. If an image has a blue portion other than the background, that portion may be made transparent.

GB

Preparation 2 Saving a logo file in the "Memory Stick" format

Convert a logo file format to the "Memory Stick" format, and save it in the 100msdcf folder, using the supplied application, PictureGear.

Notes
- The portion of a still image that is displayed on the LCD screen or in the viewfinder is 90 % of the original image. So, the portion near the edges may not be displayed.
- The resolution of a still image that is created using the chromakey setting is about 360 × 480 dots.

Usable file formats for a logo file
You can only use JPEG format files of 640 × 480 dots (VGA size) that correspond to the "Memory Stick" format. However, you can use the following file format images by converting them to "Memory Stick" format files using the supplied application, PictureGear: TIFF, BITMAP, GIF, PNG, and DVF.

Registering your password

You have to register your password (maximum eight digits) before using the auto logo insert function. Once you set your password, you need to enter your password to access LOGO INS in the menu setting, and to set, change, or deactivate the setting.

(1) While holding down MEMORY MIX, set the POWER switch from OFF (CHG) to CAMERA. Keep pressing MEMORY MIX for about five seconds.
(2) Press MENU to display the menu.
(3) Turn the SEL/PUSH EXEC dial to select [illegible], then press the dial.
(4) Turn the SEL/PUSH EXEC dial to select LOGO INS, then press the dial.
(5) Turn the SEL/PUSH EXEC dial to select NEW ENTRY, then press the dial.
(6) Turn the SEL/PUSH EXEC dial to select the desired character, then press the dial. The character you select is entered, and the cursor moves to the next column.
(7) Repeat step 6 to enter characters into other columns.
(8) Turn the SEL/PUSH EXEC dial to select EXECUTE, then press the dial.

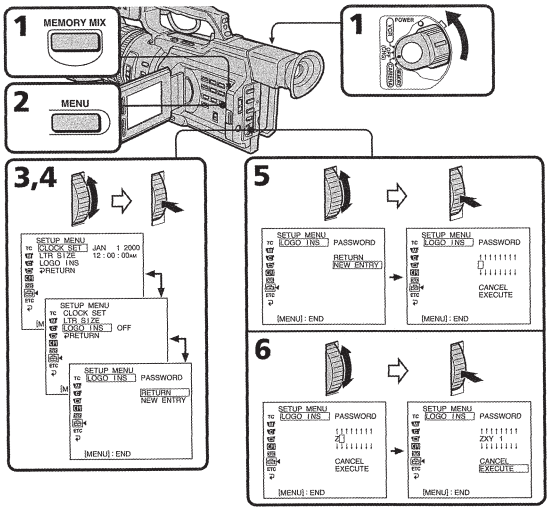

Registering your password

To cancel the setting of the password

Select CANCEL in step 8, then press the SEL/PUSH EXEC dial.

Do not forget your password
If you forget your password, you cannot change the LOGO INS setting. In this case, the memory of the camcorder must be formatted. Formatting must be done by qualified personnel only and there is a charge for it even if your camcorder is still under guarantee. For details consult your Sony dealer or local authorized Sony service facility.

On password characters
Do not select an easy password. A password must be difficult to unscramble.

When accessing the LOGO INS item
You cannot do any recording.

On characters you can use as your password
- Each time you turn the SEL/PUSH EXEC dial, the character changes as follows: (blank) ⟷ A ⟷ B ⟷ ... ⟷ Z ⟷ (blank) ⟷ 0 ⟷ 1 ⟷ ... ⟷ 9 ⟷ (blank) ⟷ ...
- You cannot set all eight columns to blank. If you do, "ALL BLANK" appears on the LCD screen or in the viewfinder.

Registering a still image to be used as a logo

Select a still image from a "Memory Stick."

Selecting a still image

Before operating
Insert the "Memory Stick" on which the desired still image is recorded, into your camcorder.

(1) While holding down MEMORY MIX, set the POWER switch from OFF (CHG) to CAMERA. Keep pressing MEMORY MIX for about five seconds.
(2) Press MENU to display the menu.
(3) Turn the SEL/PUSH EXEC dial to select [illegible], then press the dial.
(4) Turn the SEL/PUSH EXEC dial to select LOGO INS, then press the dial.
(5) Turn the SEL/PUSH EXEC dial to select ENTRY, then press the dial.
(6) Enter your password. Turn the SEL/PUSH EXEC dial to select EXECUTE, then press the dial.
(7) Turn the SEL/PUSH EXEC dial to select LOGO SET, then press the dial.

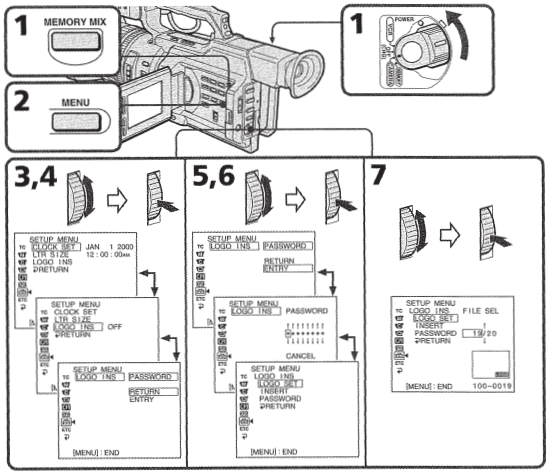

Registering the still image to be used as the logo

(8) Turn the SEL/PUSH EXEC dial to select the desired image, then press the dial.
The selected image is displayed on the LCD screen or in the viewfinder at full size.
(9) Set up CHROMA or LUMINANCE. Select CHROMA when the background of the image is blue, and select LUMINANCE when the background is white.
① Turn the SEL/PUSH EXEC dial to select CHROMA or LUMINANCE, then press the dial.
② Turn the SEL/PUSH EXEC dial to set up LEVEL ADJ, then press the dial.
(10) Turn the SEL/PUSH EXEC dial to select SET, then press the dial.
The data file name of the image, the level of CHROMA/LUMINANCE, and the indication of CHROMA or LUMINANCE are displayed on the LCD screen or in the viewfinder.

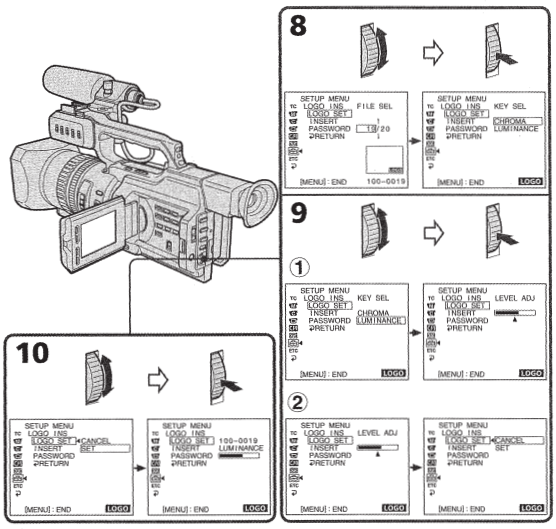

Registering the still image to be used as the logo

To cancel registering the logo
Select CANCEL in step 10, then press the SEL/PUSH EXEC dial.

Once you register the logo
INSERT is automatically set to ON in the menu settings, and the logo will be inserted.

Notes
- Do not remove the battery pack, the AC power adaptor, or the "Memory Stick" while registering the logo data. Otherwise, the "Memory Stick" or image data in it may be damaged, and moreover, this will cause serious damage of the camcorder.
- The setting of the auto logo insert function will be kept until you set LOGO INS to OFF in the menu settings.
- When INSERT is set to ON, you cannot do any recording if the "Memory Stick" in which the registered logo is recorded is not inserted, and the following mode and functions will not be active:
  – Progressive mode
  – Memory mix
  – All the functions in memory mode
  – All the functions that are used with the "Memory Stick" in VCR mode
- Even if you set the POWER switch to MEMORY, the camcorder works in VCR mode.

If you enter an incorrect password
"INCORRECT PASSWORD" will be displayed.

When the selected image cannot be displayed
"FILE OPEN ERROR" will be displayed.

Depending on the background color of the image
Choose "CHROMA" when the background color is blue, or "LUMINANCE" when the background color is white.

Deactivating the auto logo insert function

Once you set LOGO INS to ON in the menu settings, information on the LOGO INS setup will be retained until you set it to OFF.

(1) Follow steps 1 to 6 on page 6.
(2) Turn the SEL/PUSH EXEC dial to select INSERT, then press the dial.
(3) Turn the SEL/PUSH EXEC dial to select OFF, then press the dial.

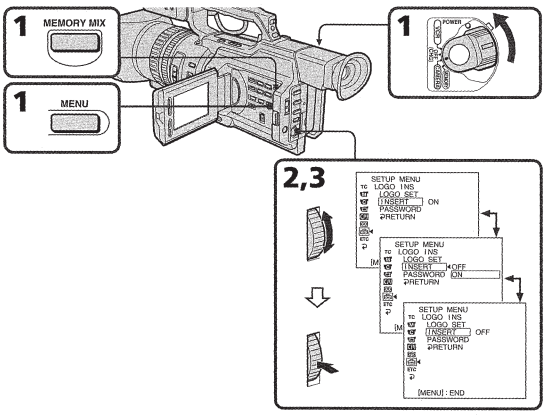

To insert the logo
Select ON in step 3, then press the SEL/PUSH EXEC dial.

Changing or resetting the setup

Changing your password

(1) Follow steps 1 to 6 on page 6.
(2) Turn the SEL/PUSH EXEC dial to select PASSWORD, then press the dial.
(3) Turn the SEL/PUSH EXEC dial to select CHANGE, then press the dial.
(4) Enter the new password, and turn the SEL/PUSH EXEC dial to select EXECUTE, then press the dial.

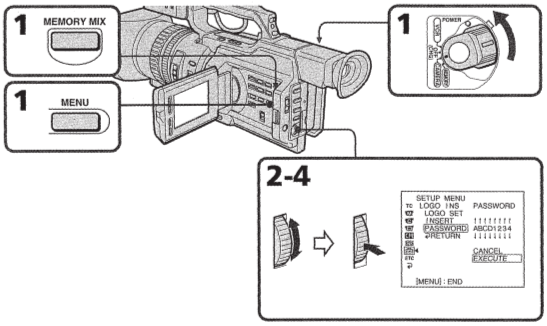

To cancel changing your password

Select CANCEL in step 4, then press the SEL/PUSH EXEC dial.

Note

If you enter "CLEARALL" in step 4, the entire setup will be cleared (p. 11).

Resetting the entire setup for the auto logo insert function

This procedure resets the entire setup for LOGO INS.

(1) Follow steps 1 to 6 on page 6.
(2) Turn the SEL/PUSH EXEC dial to select PASSWORD, then press the dial.
(3) Turn the SEL/PUSH EXEC dial to select CHANGE, then press the dial.
(4) Enter "CLEARALL," and turn the SEL/PUSH EXEC dial to select EXECUTE, then press the dial. "CLEARED" is indicated on the screen, and the entire setup will be reset.

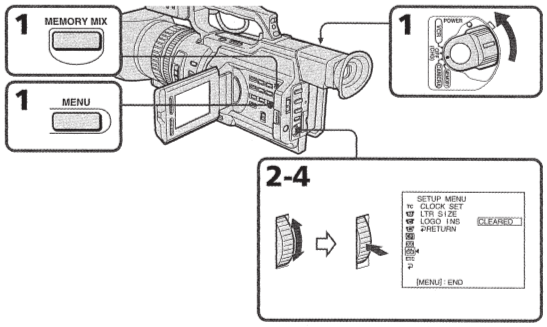

To cancel resetting

Select CANCEL in step 3, then press the SEL/PUSH EXEC dial.

Precautions concerning the auto logo insert function

Follow the precautions below.

- Do not forget your password. If you forget your password, the memory of the camcorder must be formatted. There is a charge for it even if your camcorder is still under guarantee.
- Do not remove the battery pack, the AC power adaptor, or the "Memory Stick" while registering the logo. Otherwise, the "Memory Stick," image data, or setting information on the LOGO INS item may be damaged, and moreover, this will causes serious damage of the camcorder.
- Do not break or lose the "Memory Stick" that the registered logo is recorded. We recommend that you make a backup copy and save it to another "Memory Stick" or to your PC.
- We recommend that you set the write-protect tab on the "Memory Stick" to LOCK.

On the warning messages

When the following messages appear on the LCD screen or in the viewfinder, their probable causes and remedies are as follows:

LOGO NOT INSERTED

The logo is not inserted properly, or the "Memory Stick" is not inserted that has the logo data.

→ Check if the "Memory Stick" is inserted properly, or insert the "Memory Stick" with logo data.

LOGO SYSTEM ERROR

The data setting of the logo insert system is corrupted.

→ Consult your Sony dealer or local authorized Sony service facility.

SECTION 2
DISASSEMBLY

The following flow chart shows the disassembly procedure.

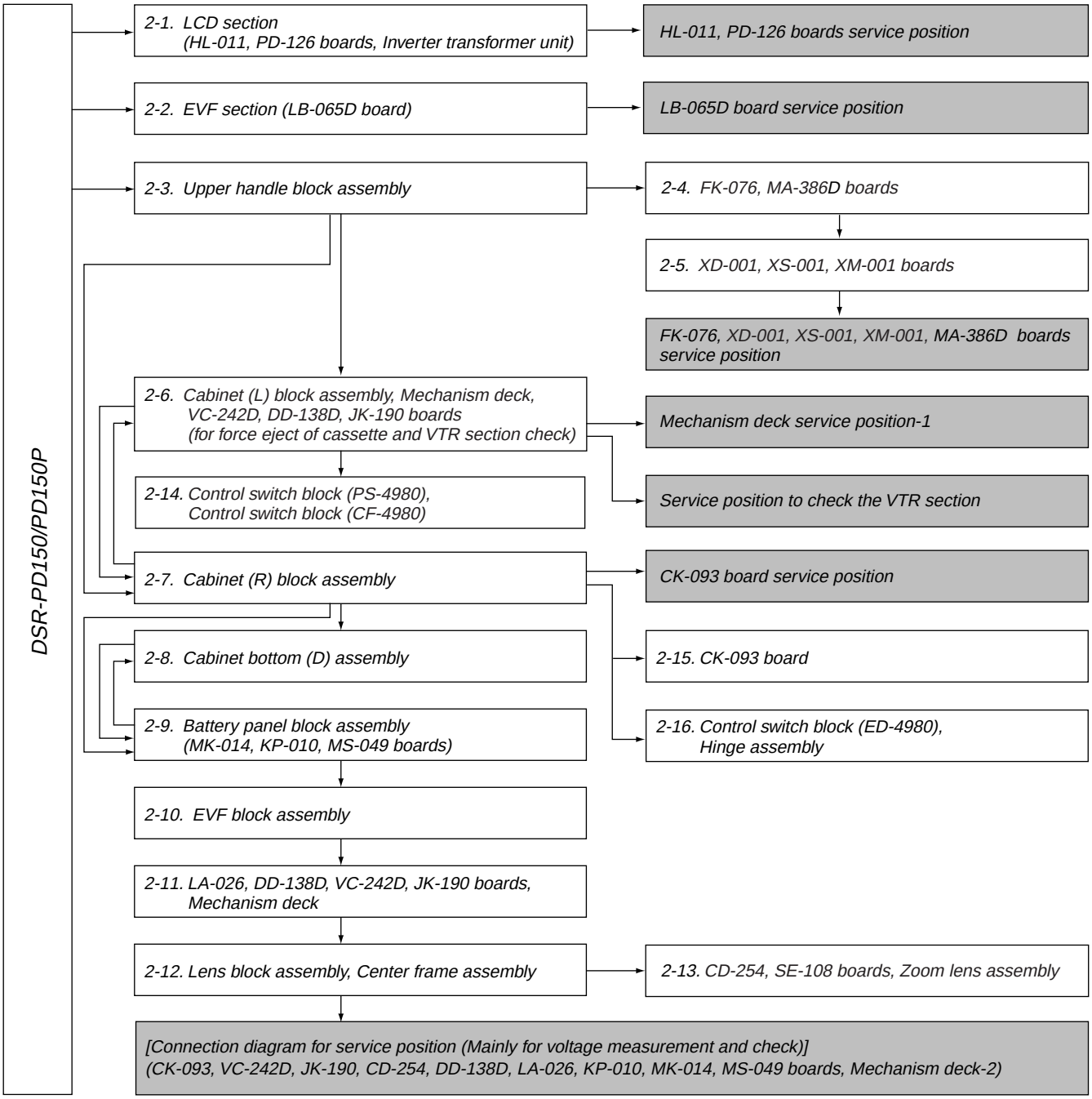

NOTE: Follow the disassembly procedure in the numerical order given.

2-1. LCD SECTION (HL-011, PD-126 BOARDS, INVERTER TRANSFORMER UNIT)

REMOVING THE PD-126 BOARD, INVERTER TRANSFORMER UNIT

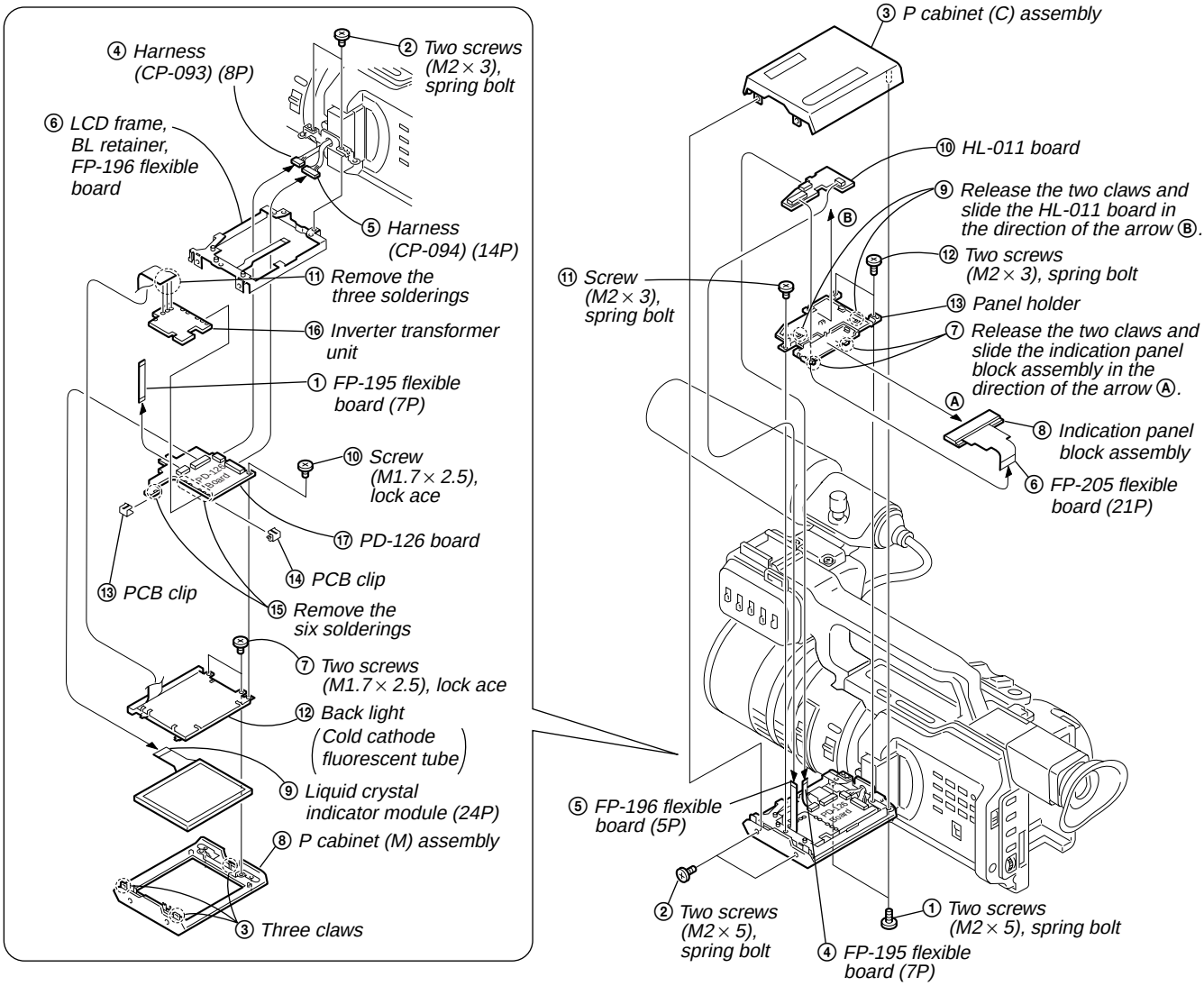

[HL-011, PD-126 BOARDS SERVICE POSITION]

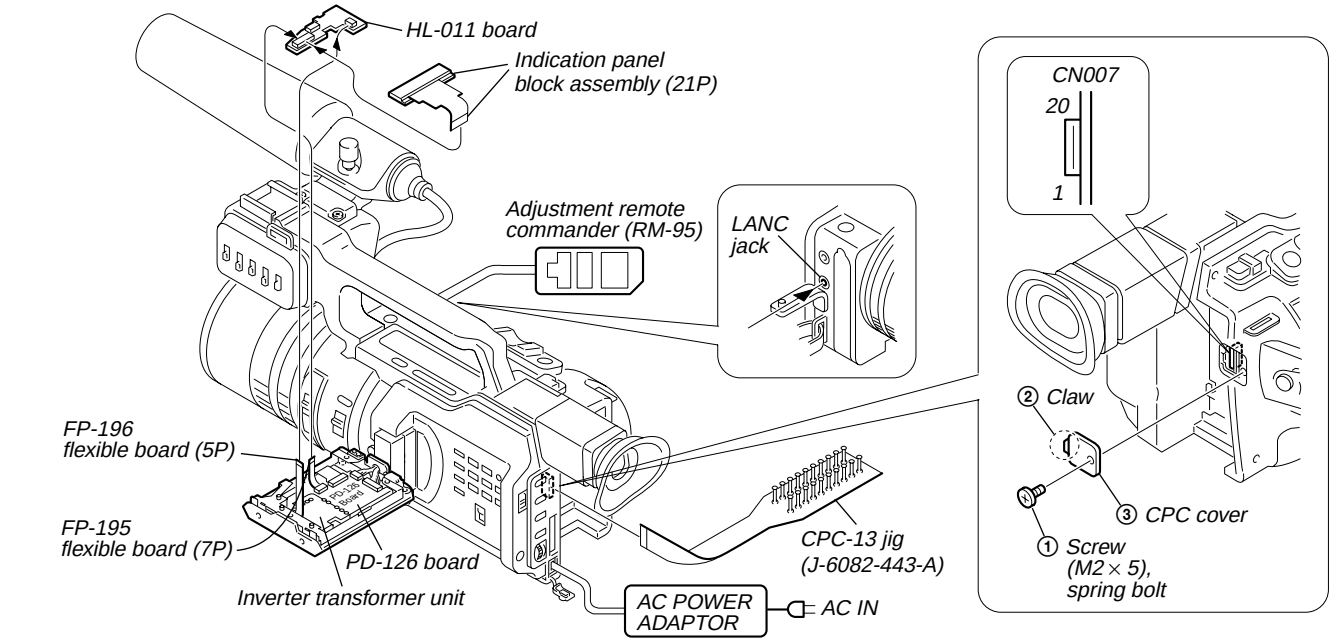

2-2. EVF SECTION (LB-065D BOARD)

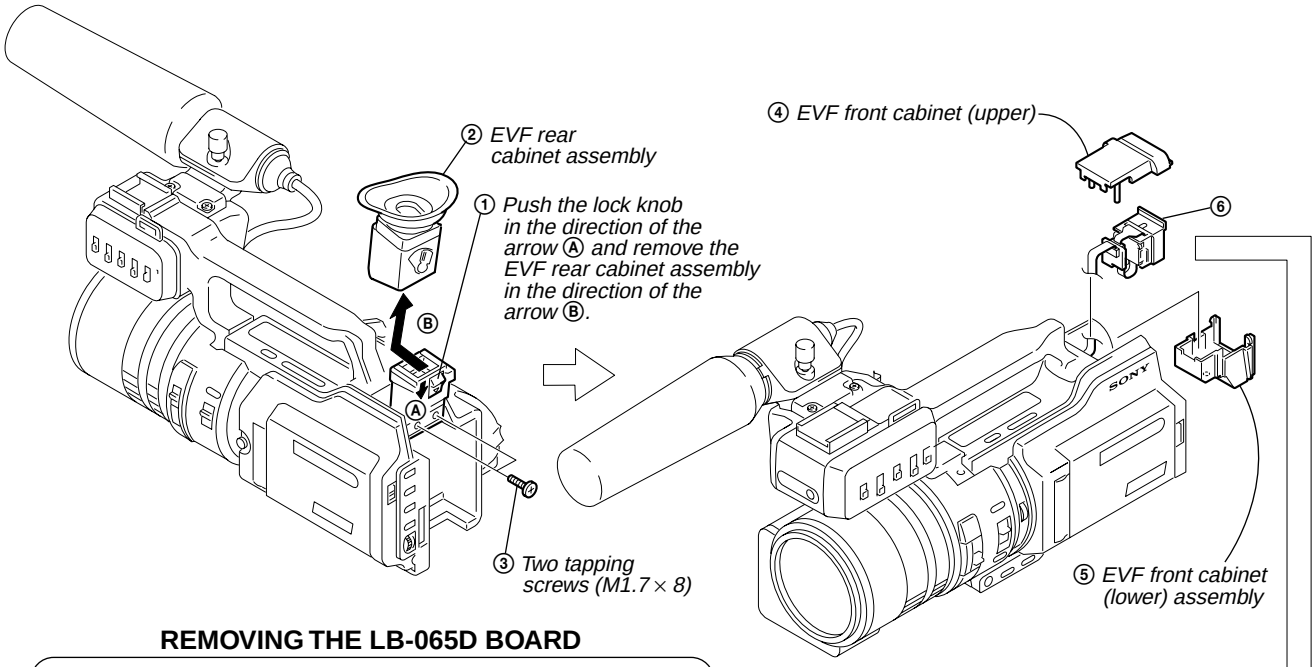

REMOVING THE LB-065D BOARD

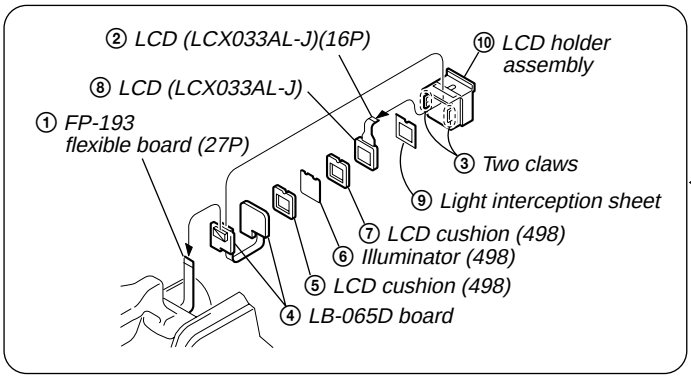

[LB-065D BOARD SERVICE POSITION]

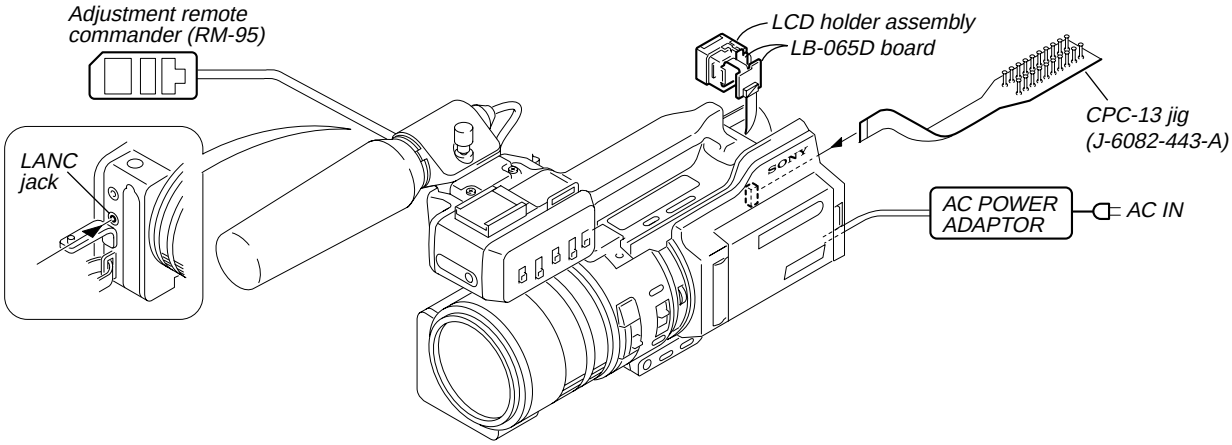

2-3. UPPER HANDLE BLOCK ASSEMBLY

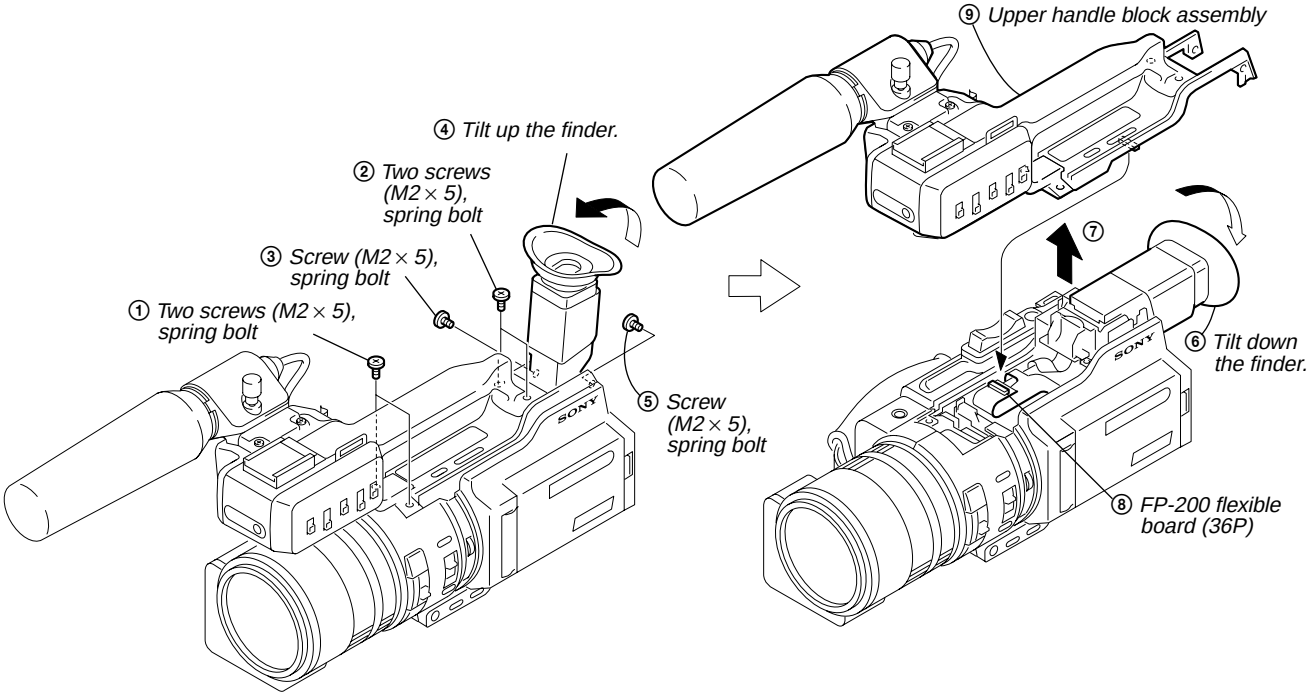

2-4. FK-076, MA-386D BOARDS

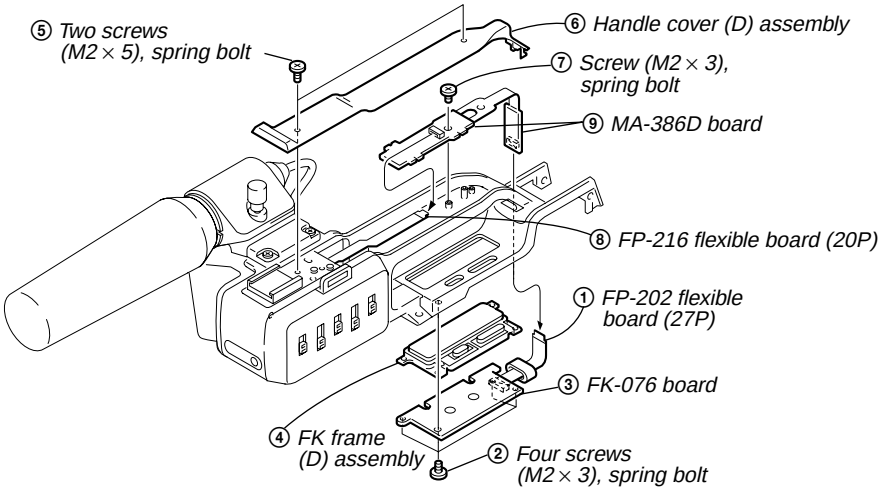

2-5. XD-001, XS-001, XM-001 BOARDS

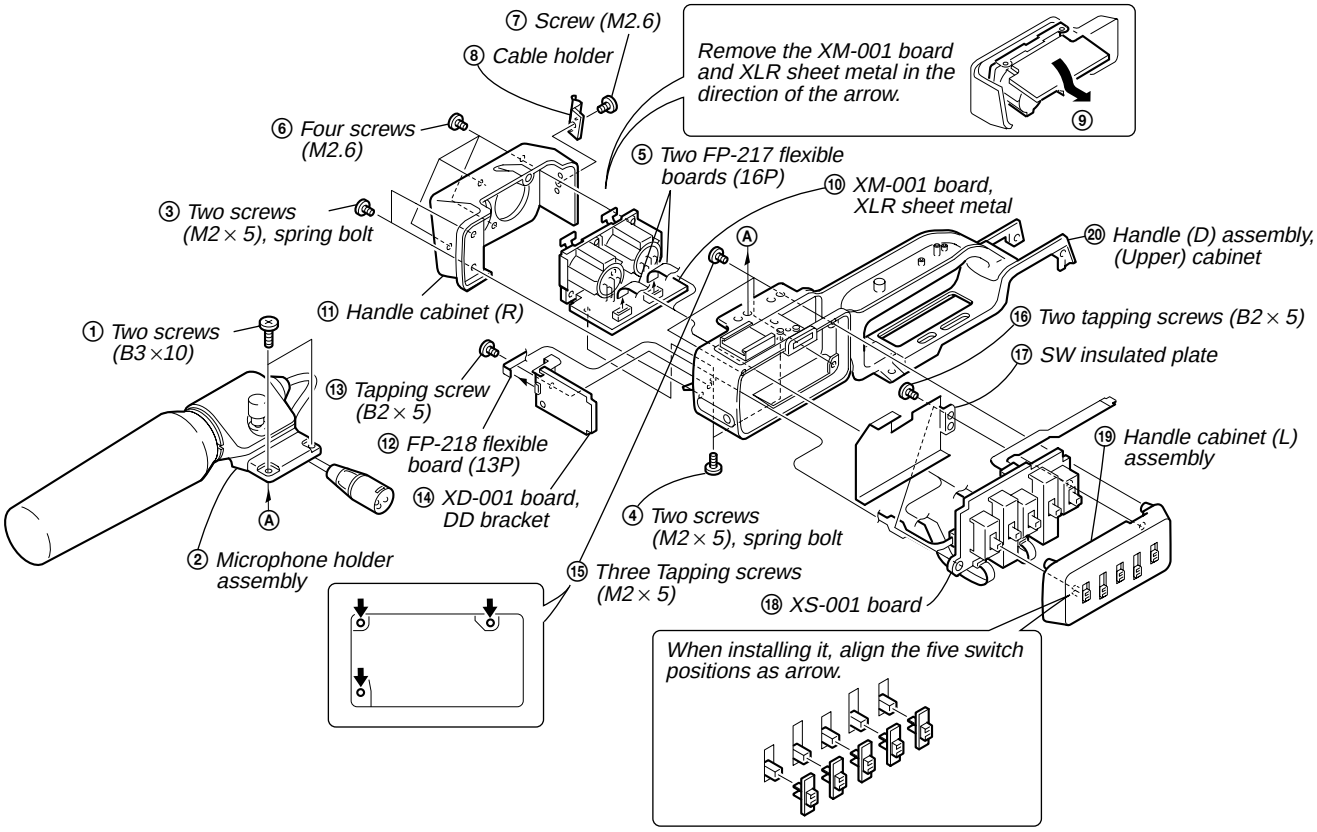

PRECAUTION DURING INSTALLATION

[FK-076, XD-001, XS-001, XM-001, MA-386D BOARDS SERVICE POSITION]

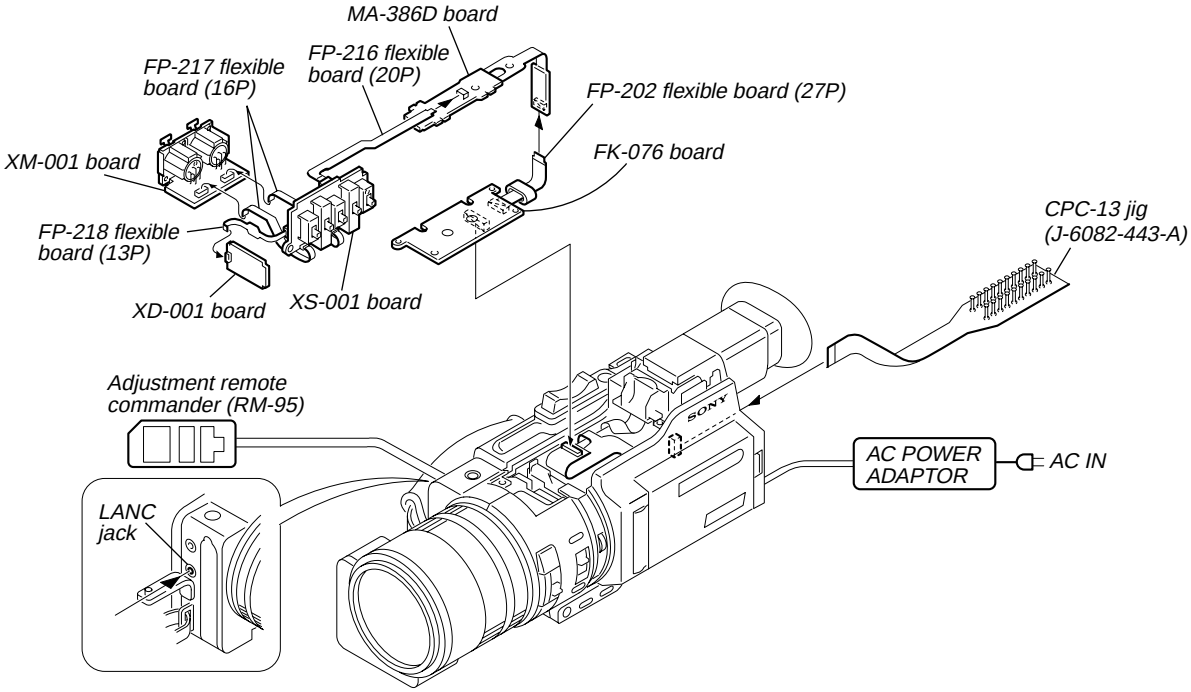

2-6. CABINET (L) BLOCK ASSEMBLY, MECHANISM DECK, VC-242D, DD-138D, JK-190 BOARDS (FOR FORCE EJECT OF CASSETTE AND VTR SECTION CHECK)

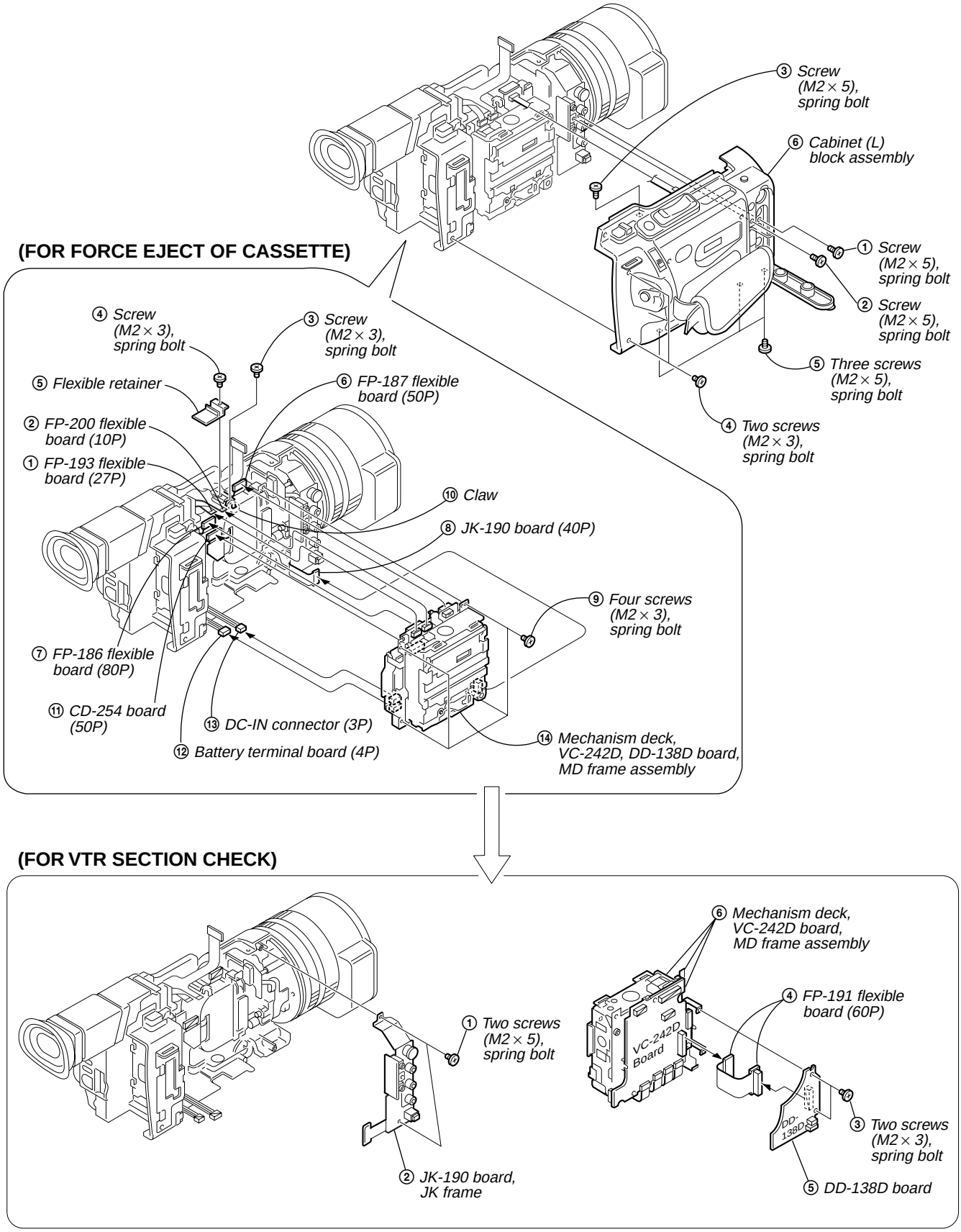

[MECHANISM DECK SERVICE POSITION-1]

Note: *Use the parts only which can be removed easily from outside of the mechanism deck.*

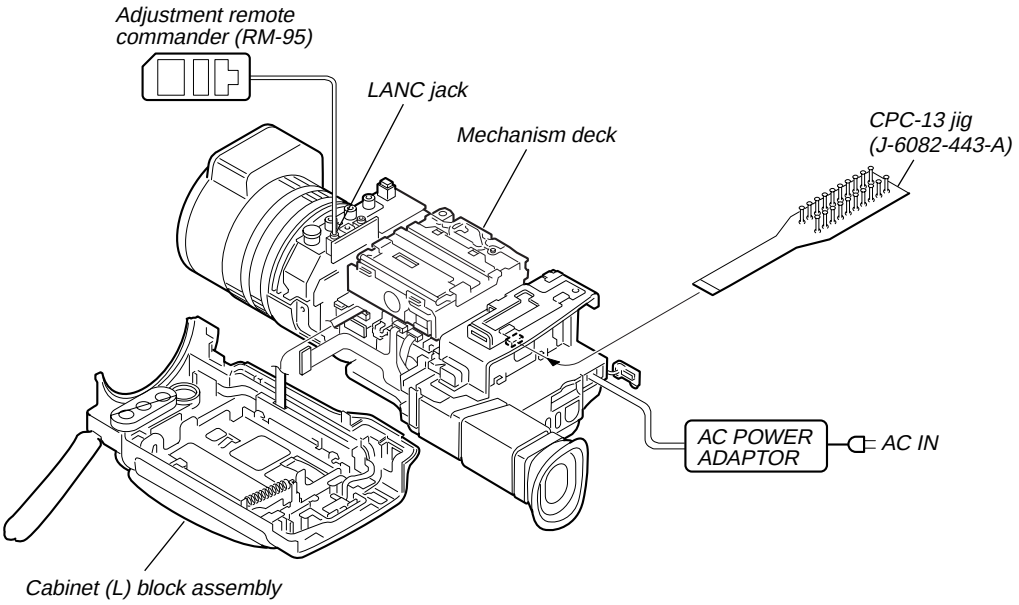

[SERVICE POSITION TO CHECK THE VTR SECTION]

Connection to Check the VTR Section

To check the VTR Section, set the VTR to the "forced VTR power ON" mode.
Operate the VTR functions using the adjustment remote commander (with the HOLD switch set in the OFF position)
(However, connect the cabinet (L) assembly when cassette is going to be ejected only.)

Setting the "Forced VTR Power ON" mode

1) Select page: 0, address: 01, and set data: 01.
2) Select page: D, address: 10, set data: 02, and press the PAUSE button of the adjustment remote commander.

Exiting the "Forced VTR Power ON" mode

1) Select page: 0, address: 01, and set data: 01.
2) Select page: D, address: 10, set data: 00, and press the PAUSE button of the adjustment remote commander.
3) Select page: 0, address: 01, and set data: 00.

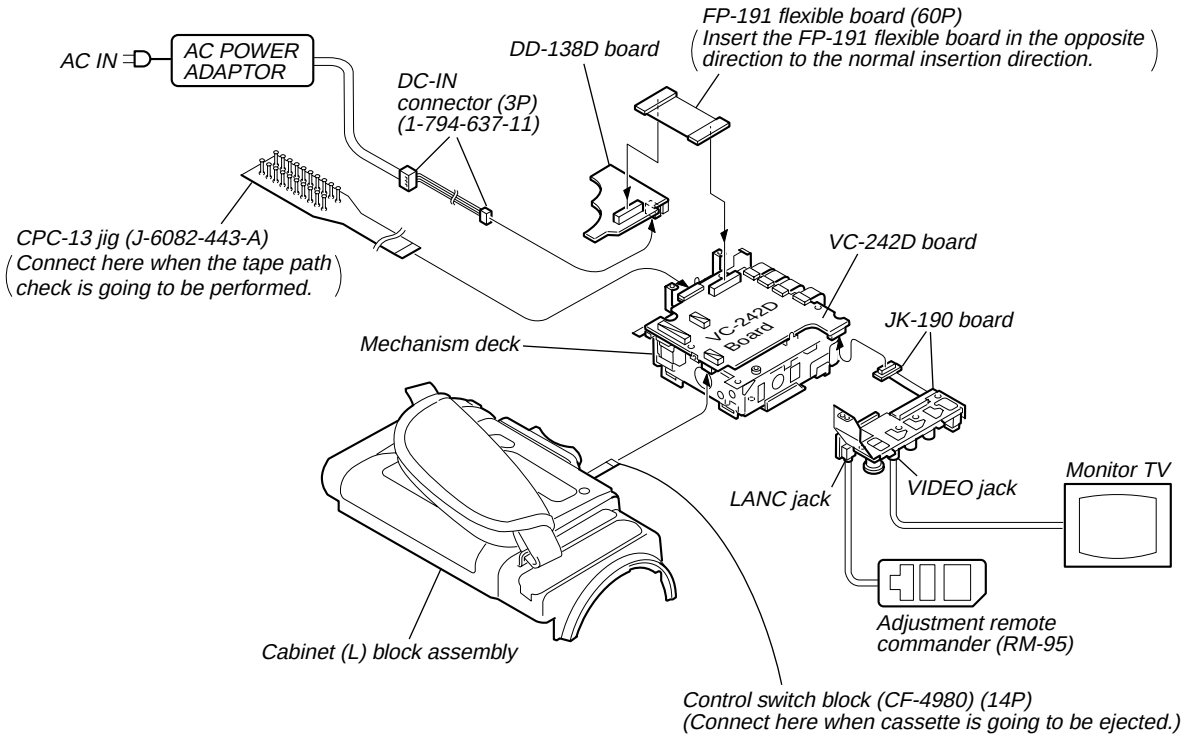

2-7. CABINET (R) BLOCK ASSEMBLY

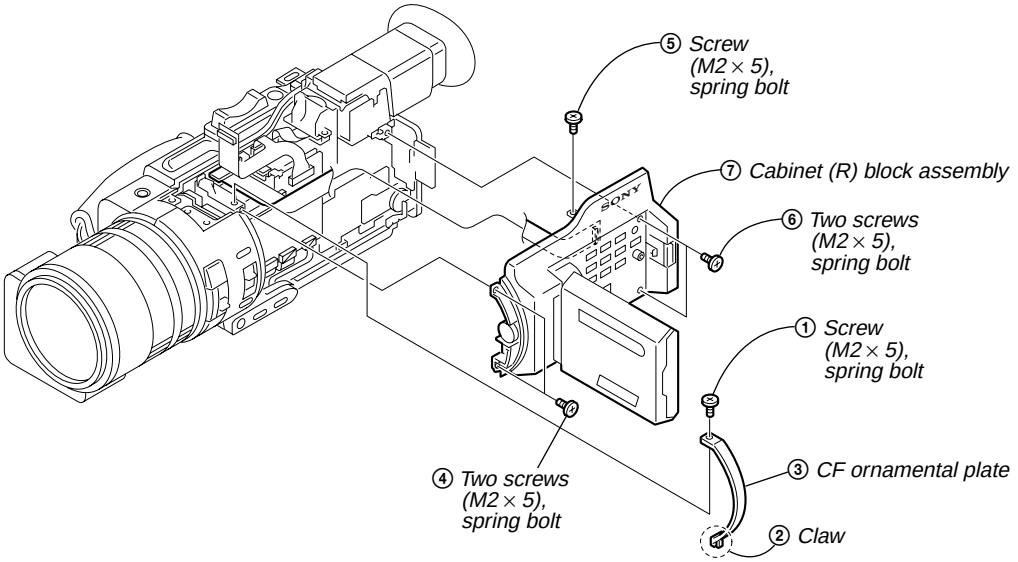

[CK-093 BOARD SERVICE POSITION]

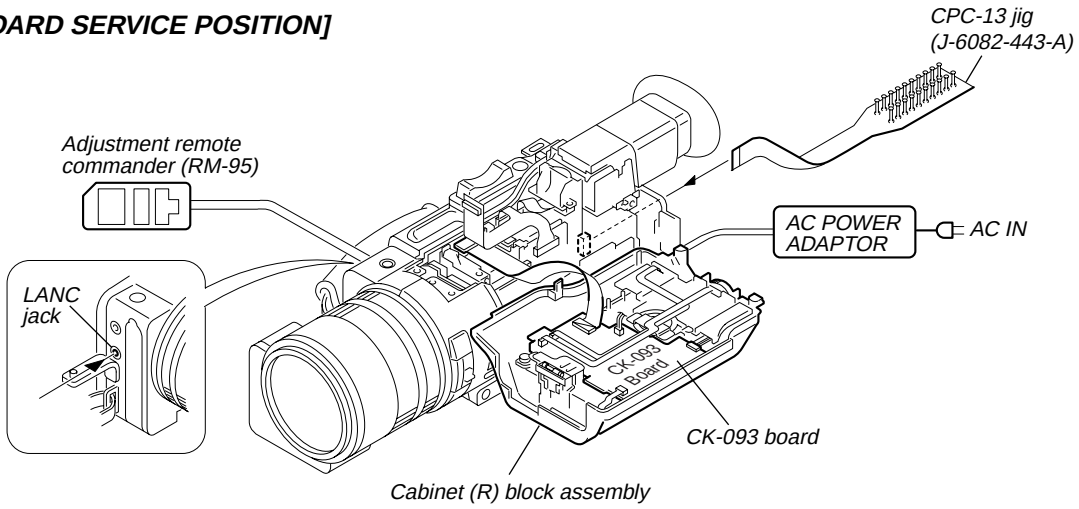

2-8. CABINET BOTTOM (D) ASSEMBLY

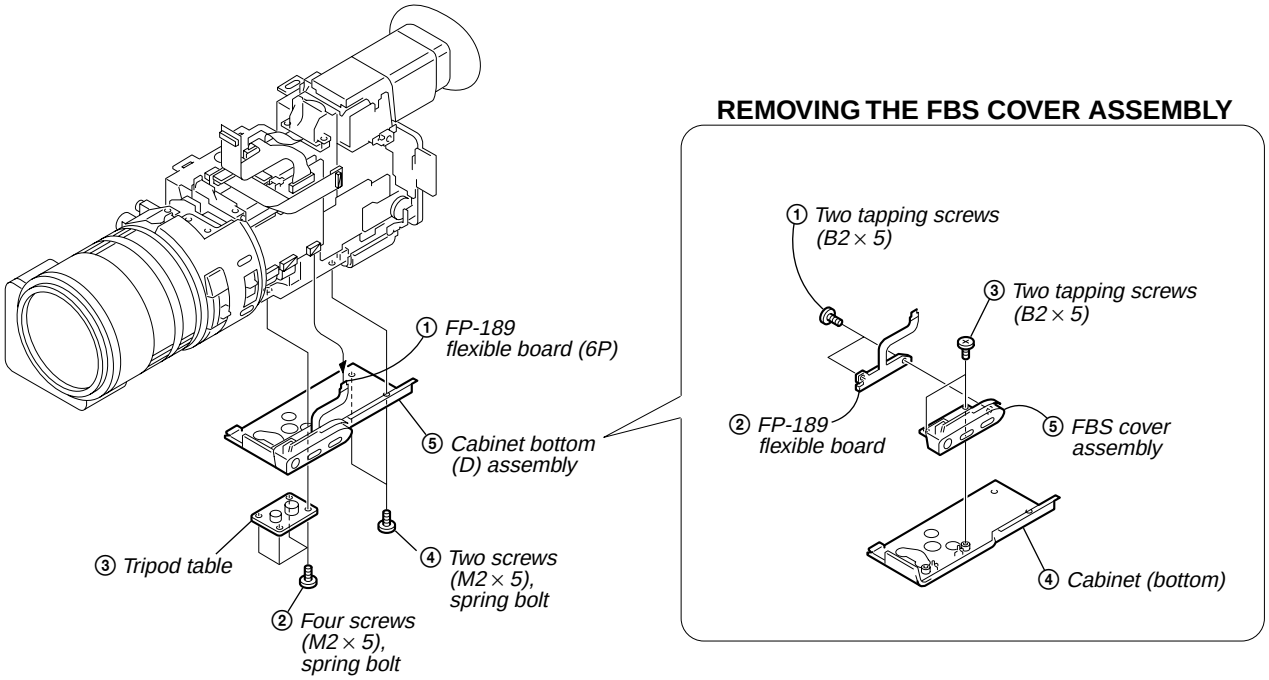

2-9. BATTERY PANEL BLOCK ASSEMBLY (MK-014, KP-010, MS-049 BOARDS)

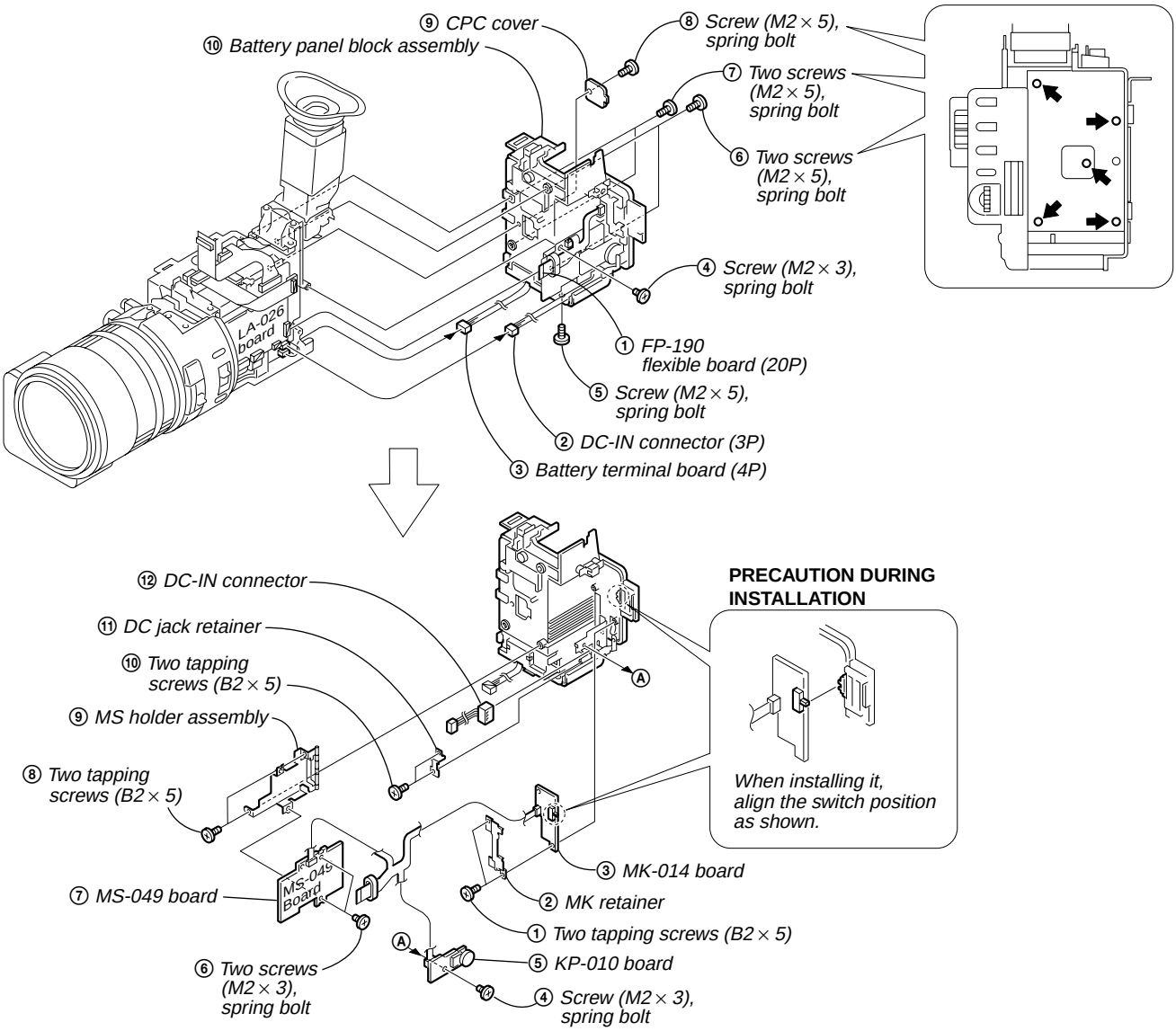

2-10. EVF BLOCK ASSEMBLY

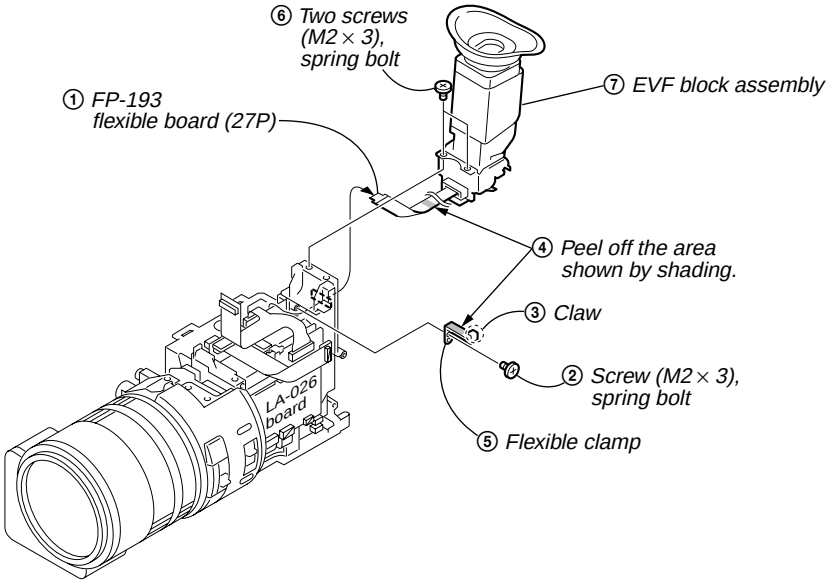

2-11. LA-026, DD-138D, VC-242D, JK-190 BOARDS, MECHANISM DECK

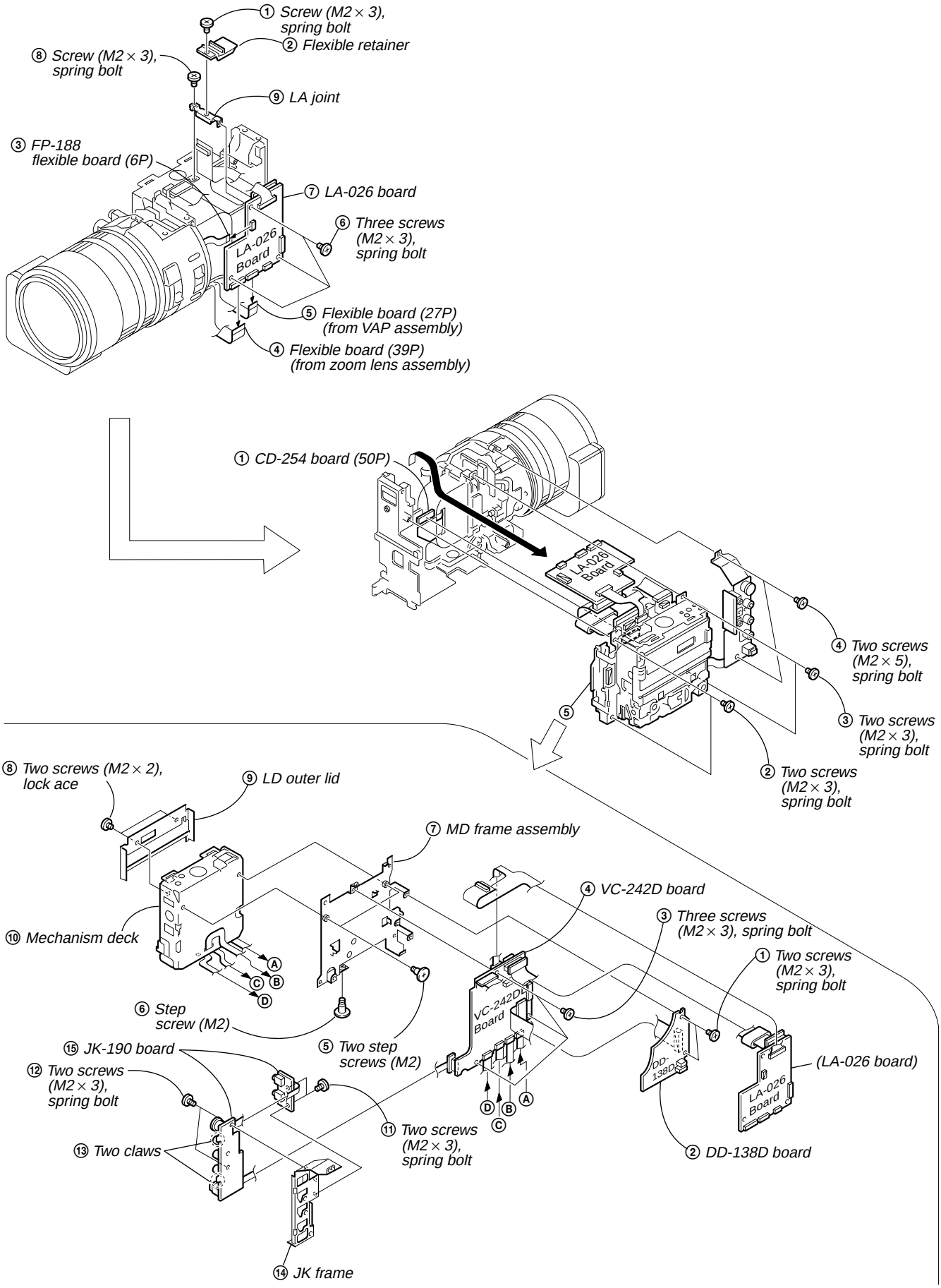

2-12. LENS BLOCK ASSEMBLY, CENTER FRAME ASSEMBLY

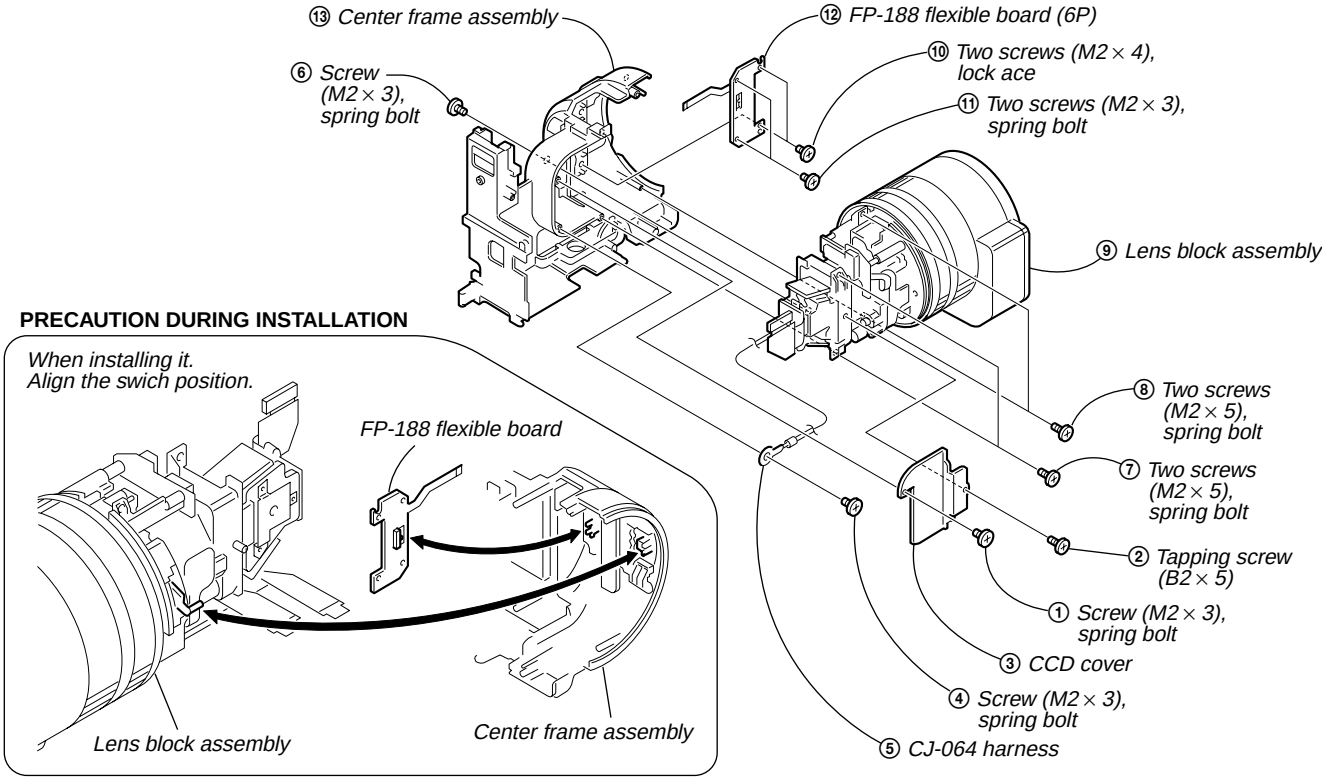

[SERVICE POSITION TO CHECK THE CAMERA SECTION]

Connection to Check the CAMERA Section

To check the CAMERA Section, set the CAMERA to the "forced CAMERA power ON" mode.

Setting the "Forced CAMERA Power ON" mode

1) Select page: 0, address: 01, and set data: 01.
2) Select page: D, address: 10, set data: 01, and press the PAUSE button of the adjustment remote commander.

Exiting the "Forced CAMERA Power ON" mode

1) Select page: 0, address: 01, and set data: 01.
2) Select page: D, address: 10, set data: 00, and press the PAUSE button of the adjustment remote commander.
3) Select page: 0, address: 01, and set data: 00.

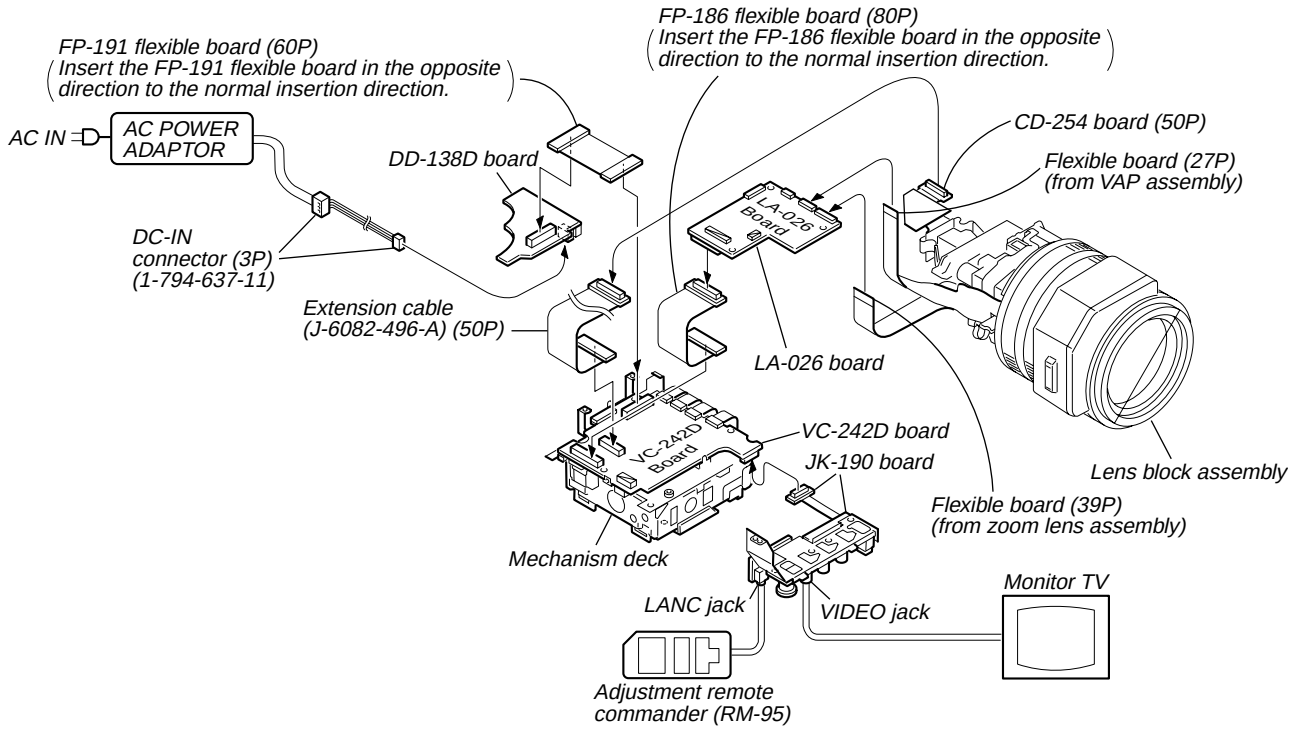

2-13. CD-254, SE-108 BOARDS, ZOOM LENS ASSEMBLY

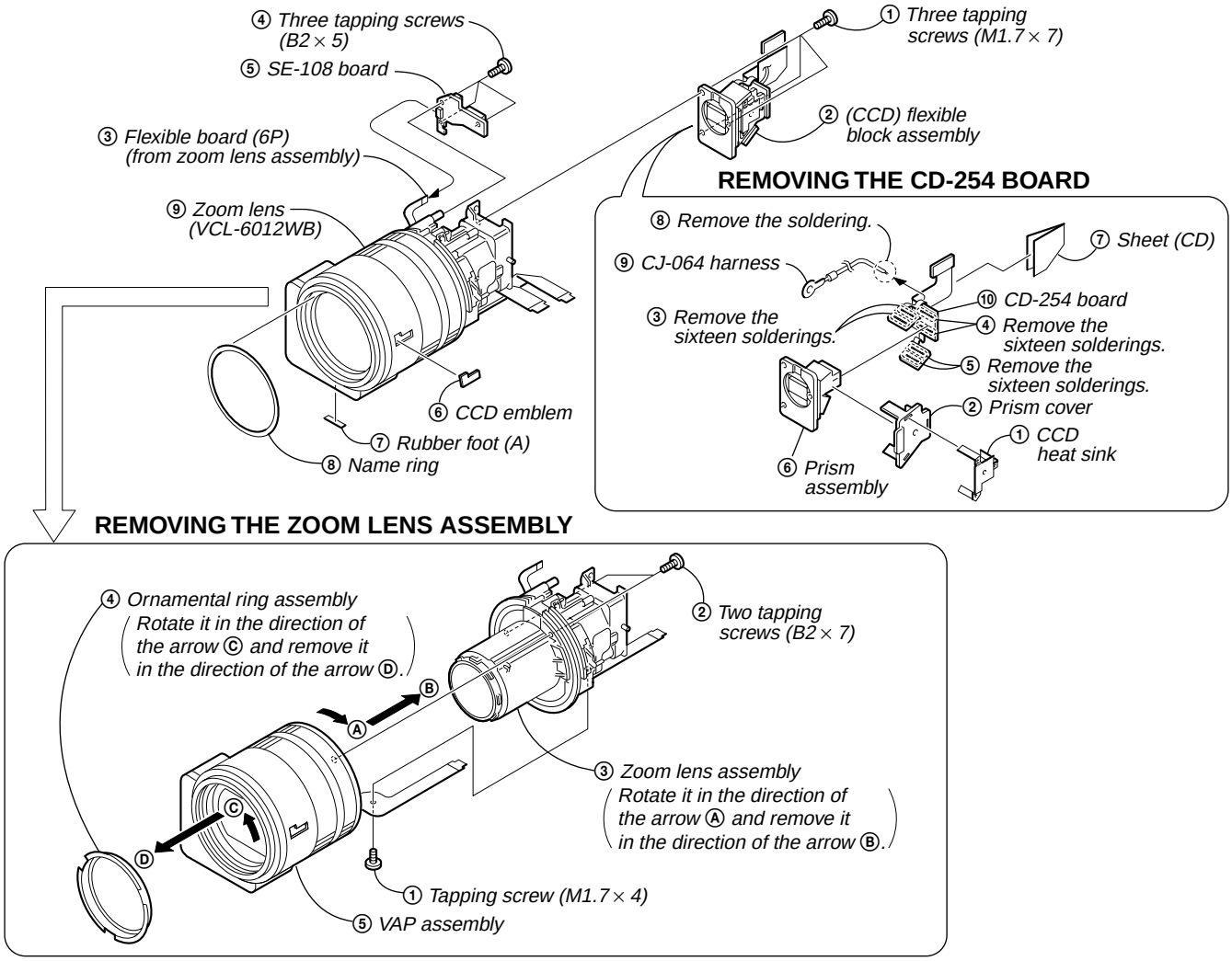

2-14. CONTROL SWITCH BLOCK (PS-4980), CONTROL SWITCH BLOCK (CF-4980)

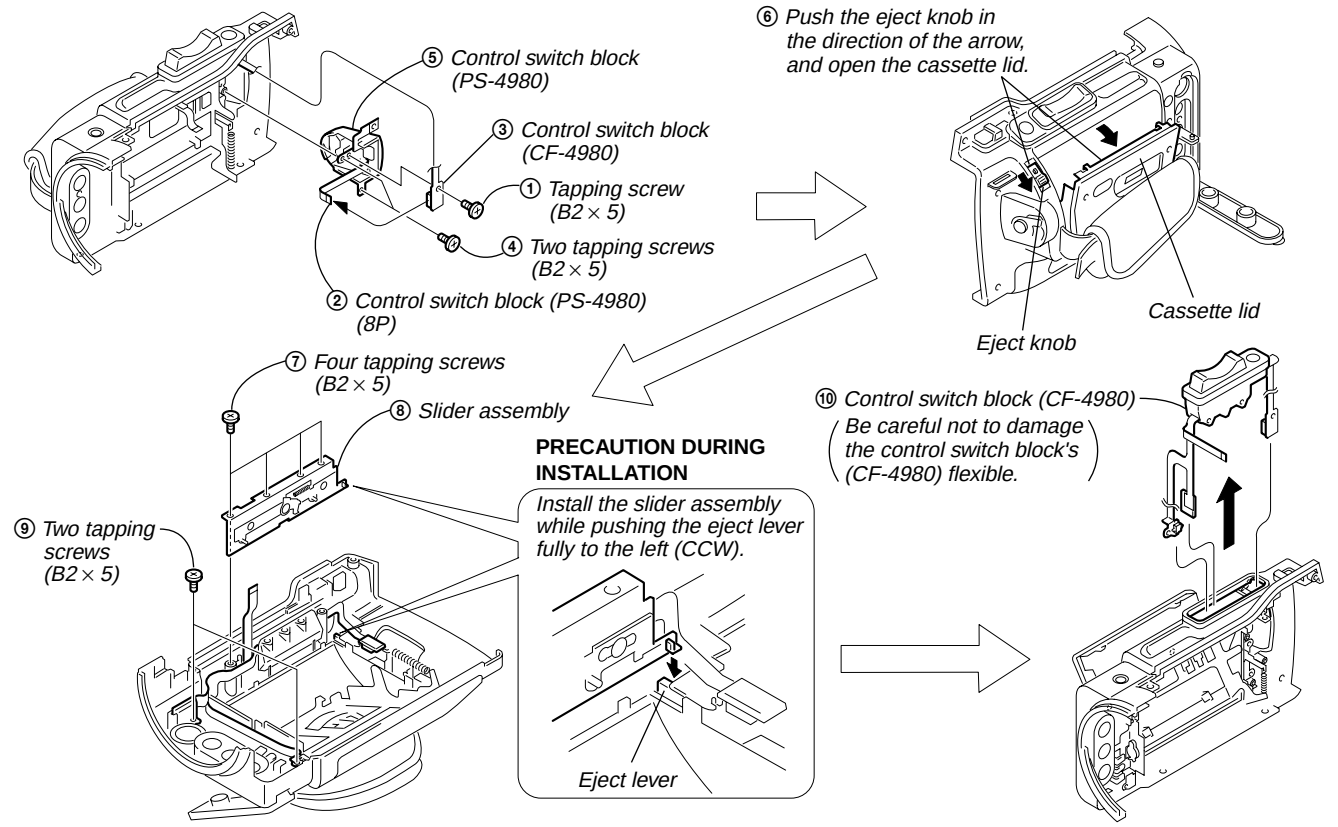

[CONNECTION DIAGRAM FOR SERVICE POSITION (Mainly for voltage measurement and check)]
(CK-093, VC-242D, JK-190, CD-254, DD-138D, LA-026, KP-010, MK-014, MS-049 BOARDS, MECHANISM DECK-2)

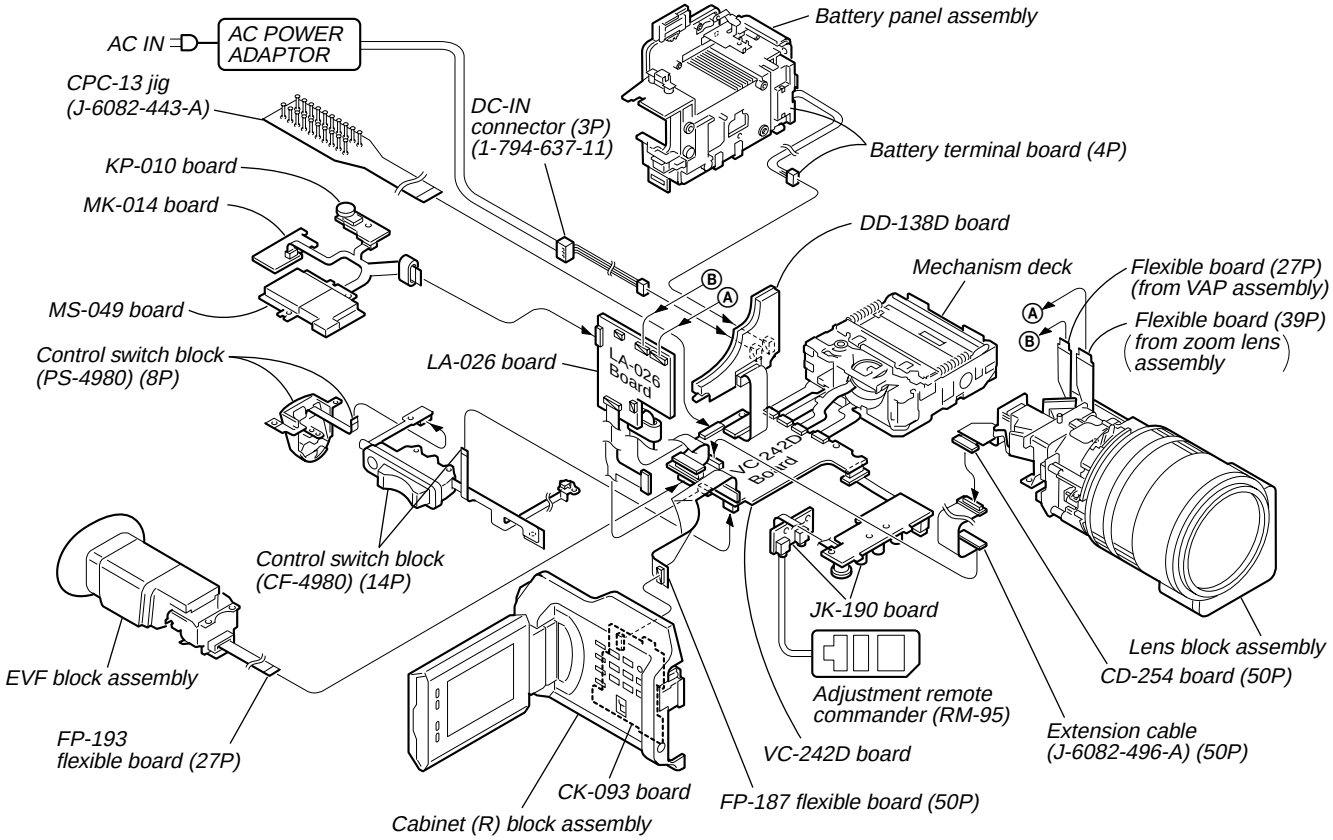

2-15. CK-093 BOARD

PRECAUTION DURING INSTALLATION

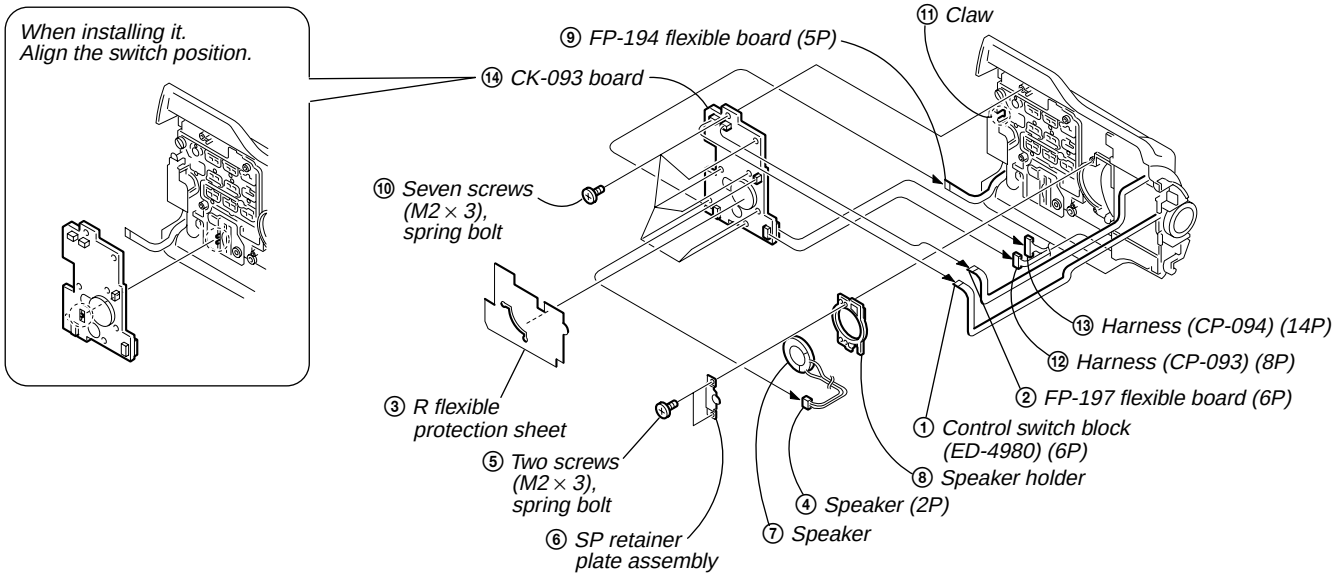

2-16. CONTROL SWITCH BLOCK (ED-4980), HINGE ASSEMBLY

Start the removal work after the LCD section has been removed referring section 2-1.

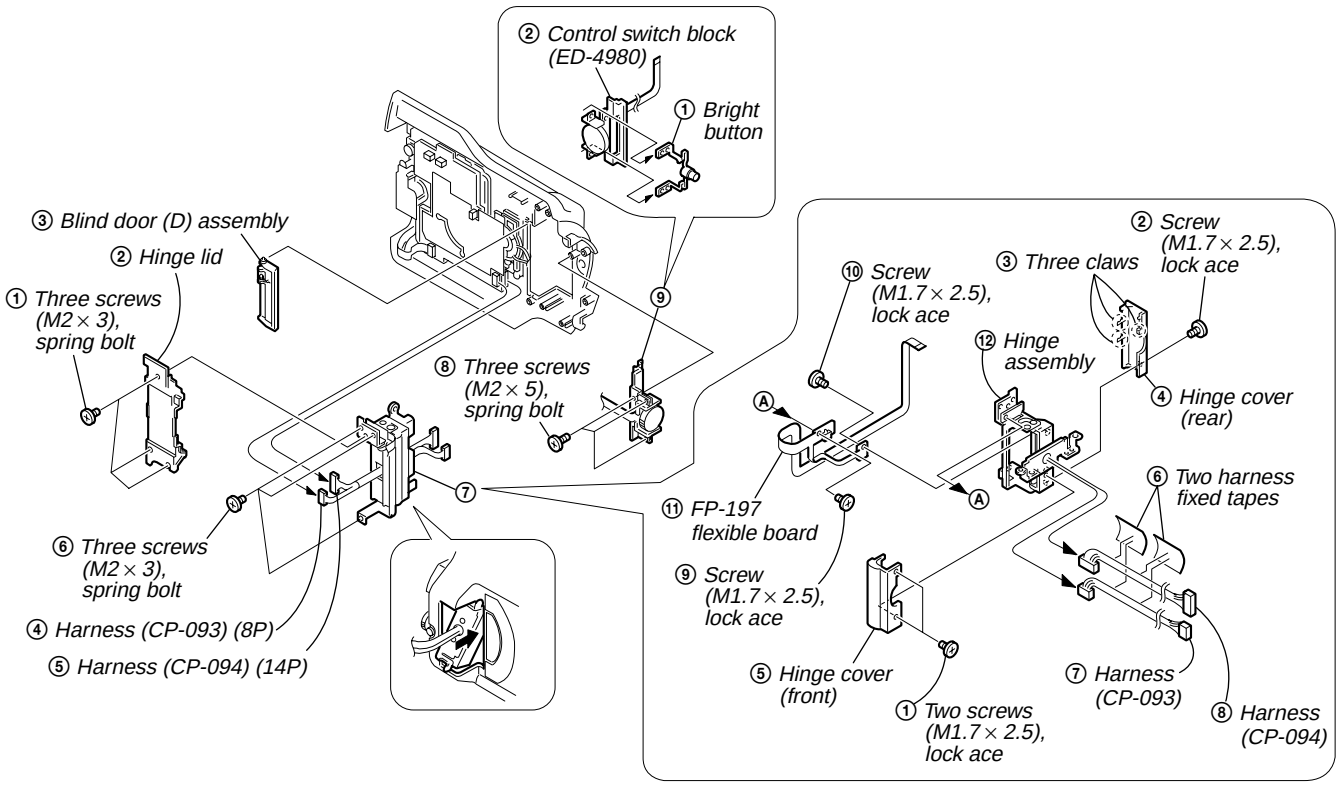

2-17. CIRCUIT BOARDS LOCATION

The circuit boards contained in the zoom lens are not shown.

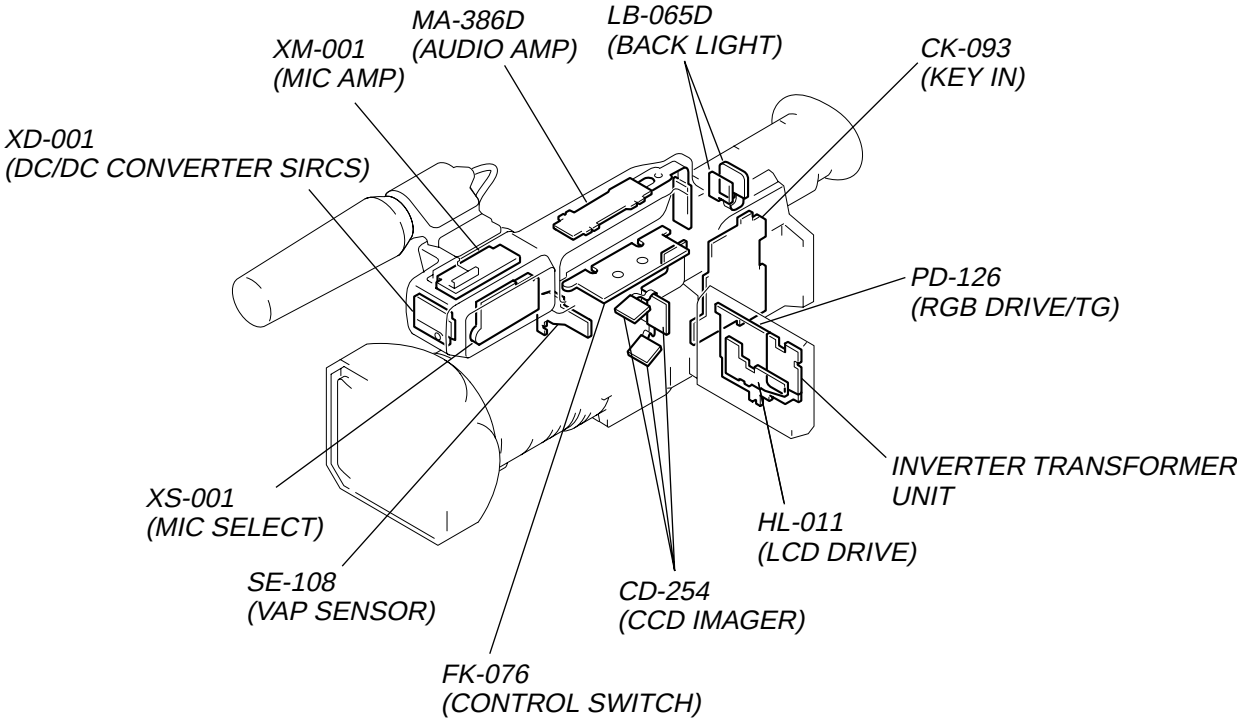

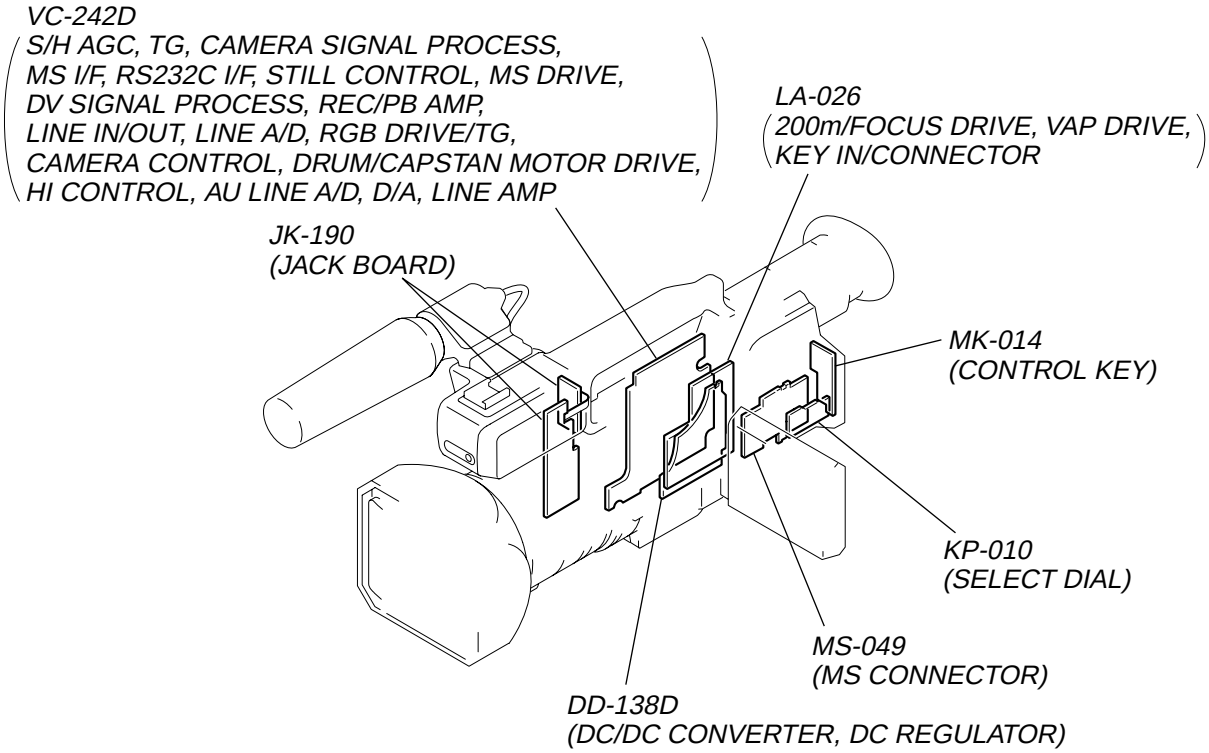

2-18. FLEXIBLE BOARDS LOCATION

The flexible boards contained in the mechanism deck and that in the zoom lens are not shown.

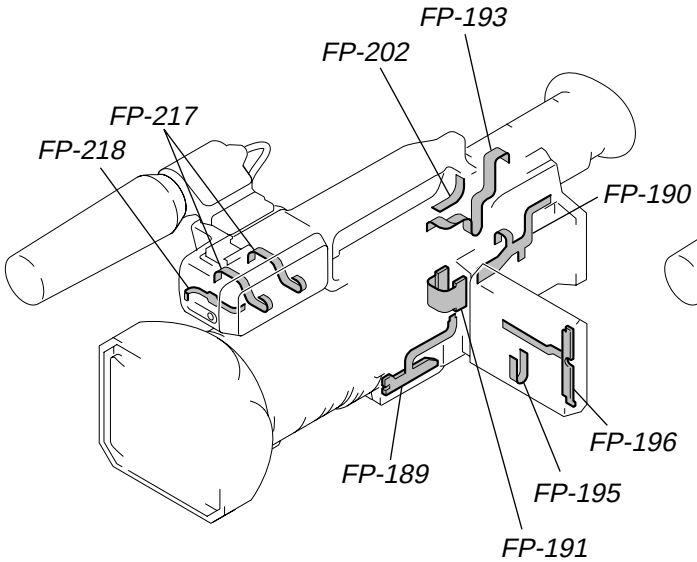

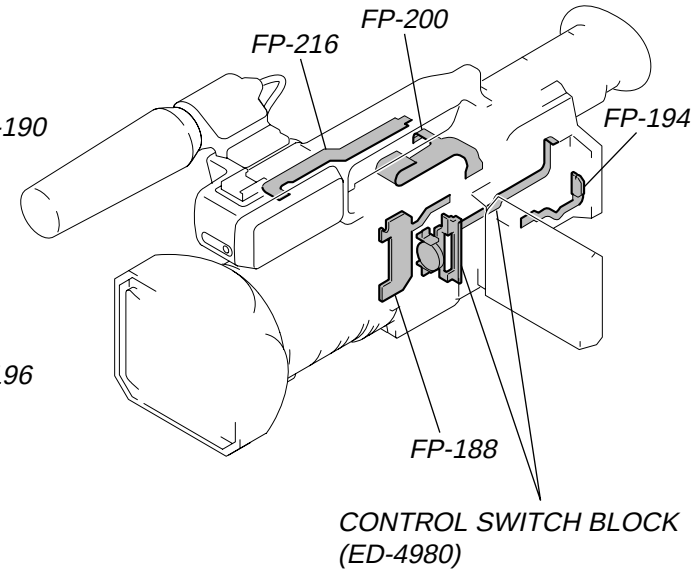

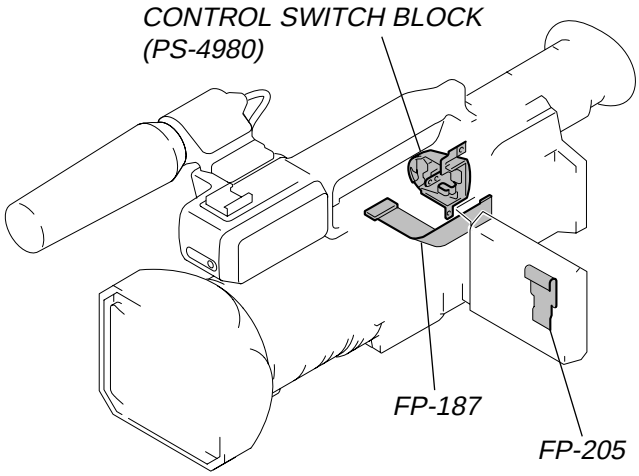

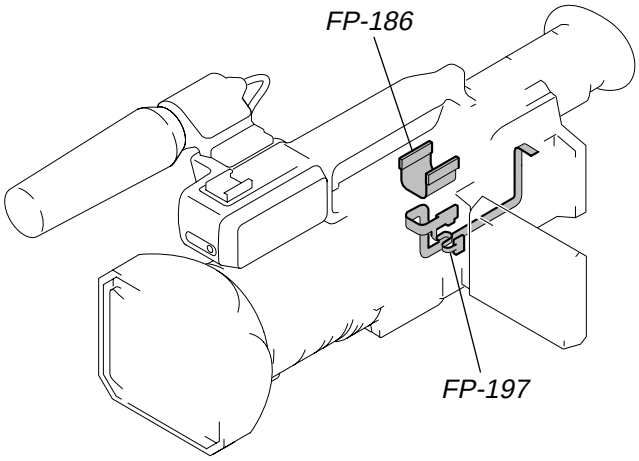

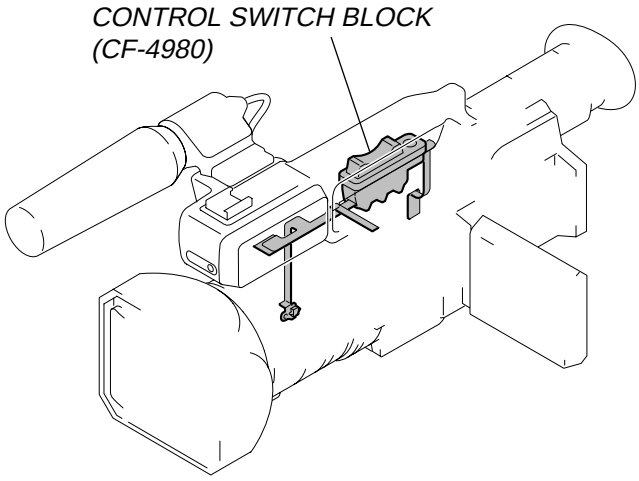

SECTION 3
BLOCK DIAGRAMS

3-1. OVERALL BLOCK DIAGRAM (1/4)

( ) : Page No. shown in ( ) indicates the page to refer on the schematic diagram.

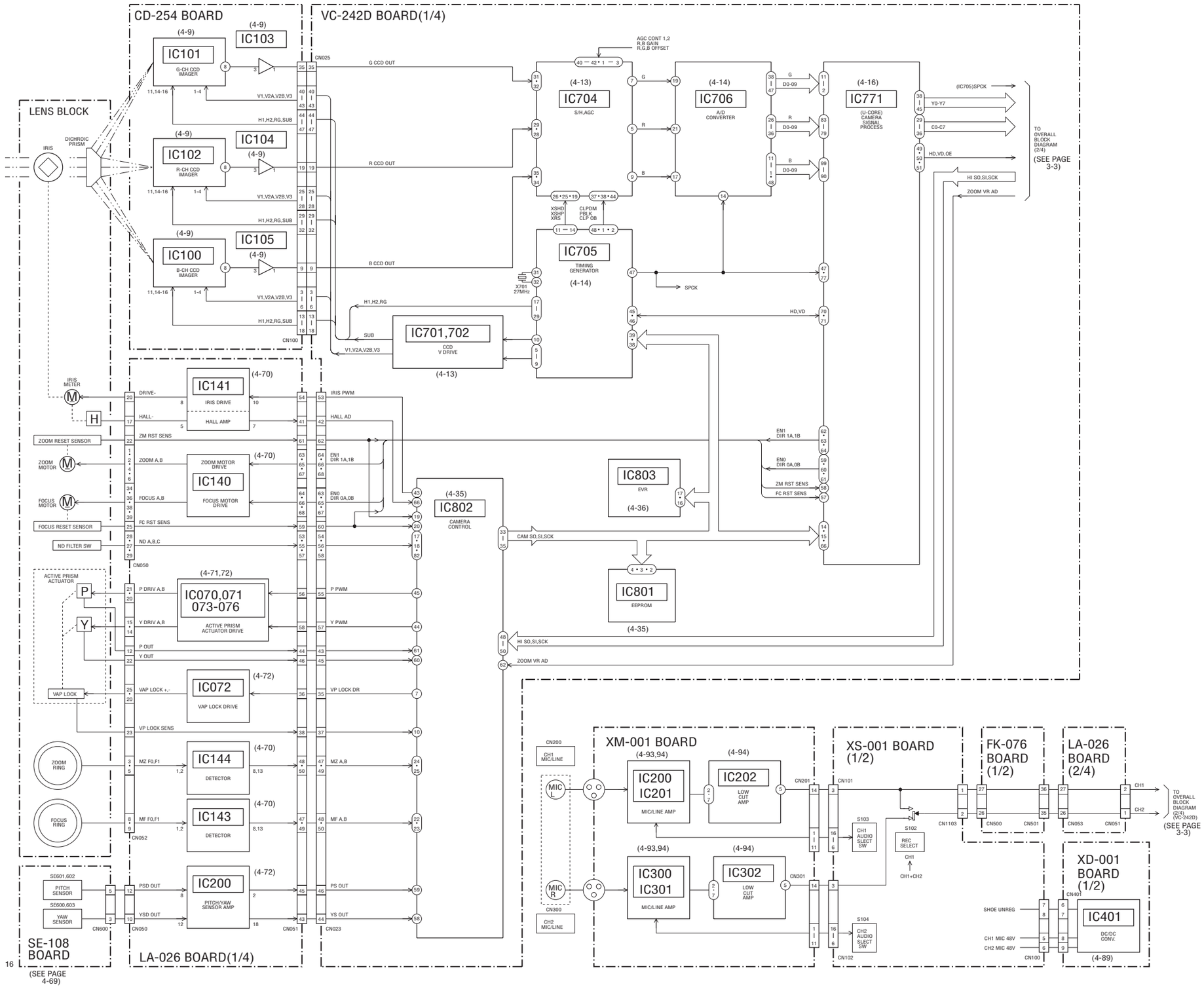

3-2. OVERALL BLOCK DIAGRAM (2/4)

( ) : Page No. shown in ( ) indicates the page to refer on the schematic diagram.

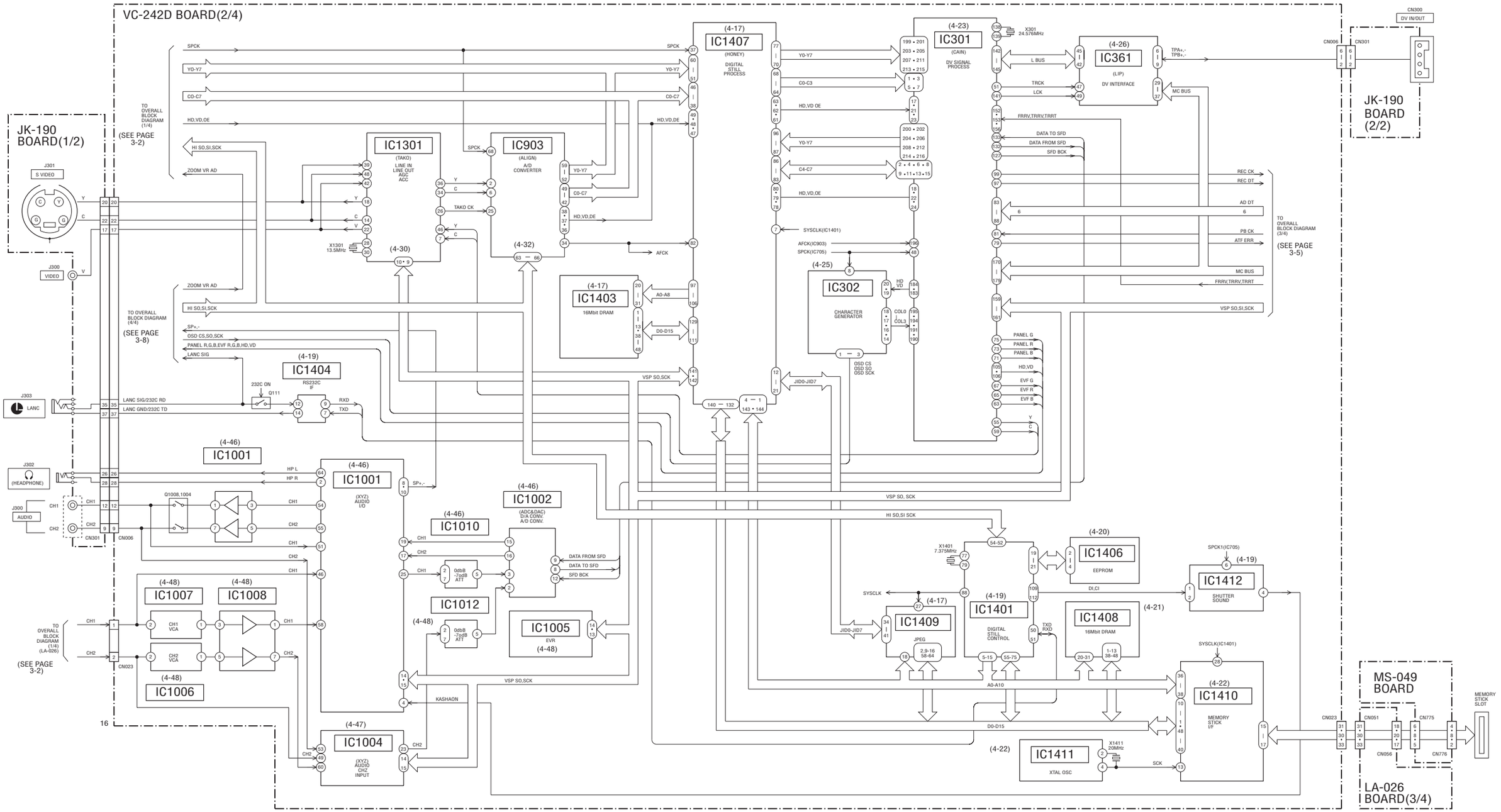

3-3. OVERALL BLOCK DIAGRAM (3/4)

( ) : Page No. shown in ( ) indicates the page to refer on the schematic diagram.

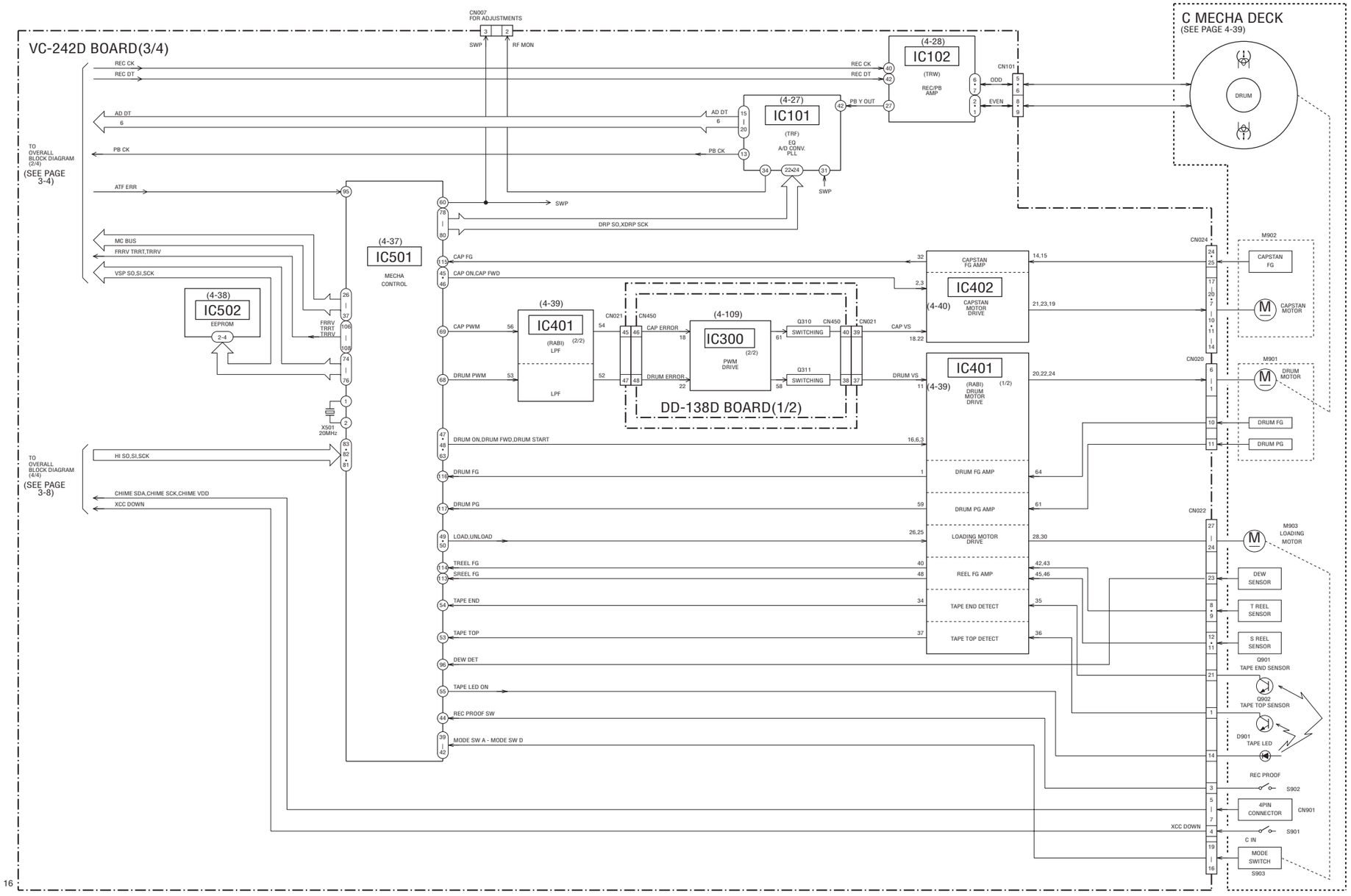

3-4. OVERALL BLOCK DIAGRAM (4/4)

( ) : Page No. shown in ( ) indicates the page to refer on the schematic diagram.

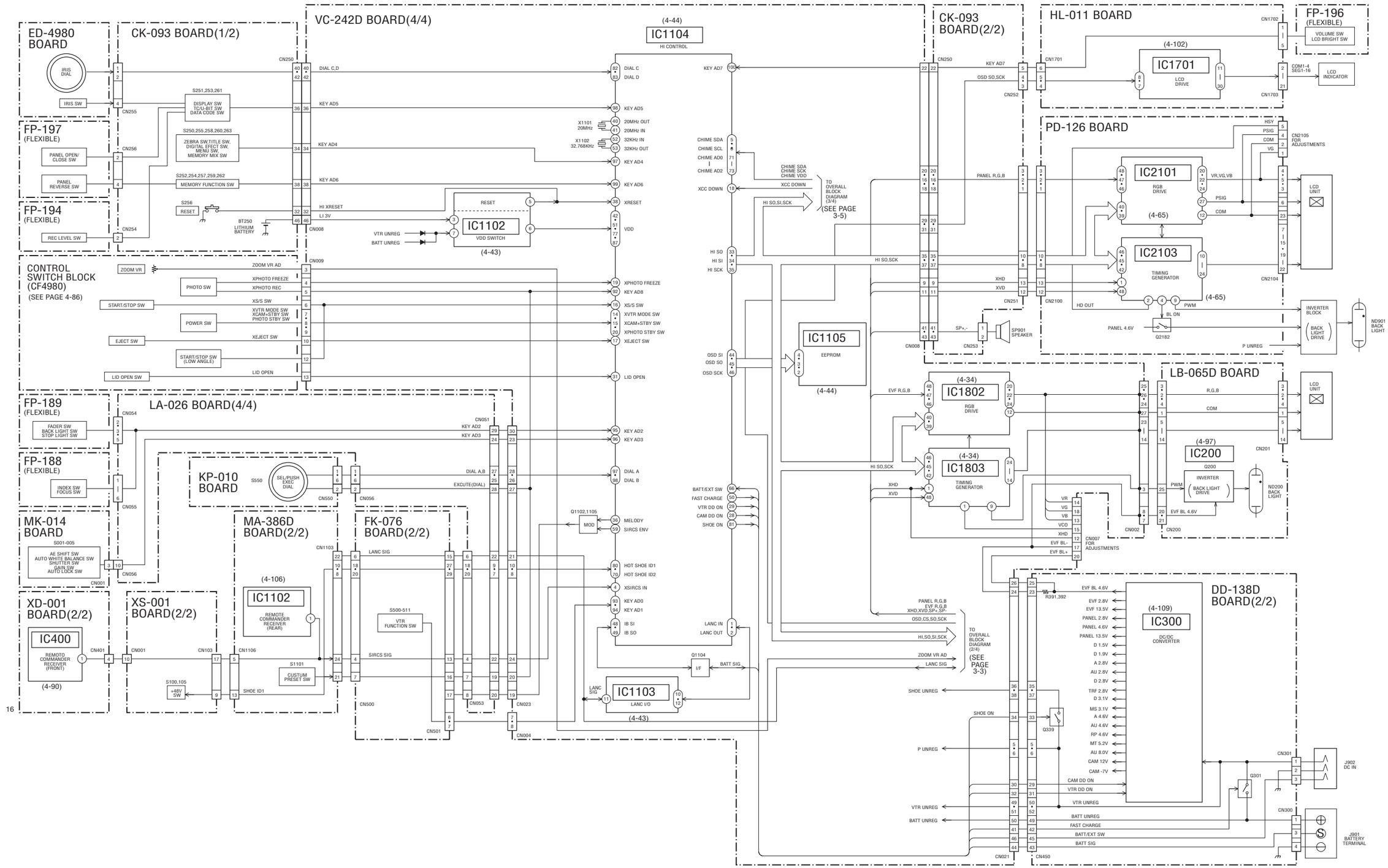

3-5. POWER BLOCK DIAGRAM (1/3)

( ) : Page No. shown in ( ) indicates the page to refer on the schematic diagram.

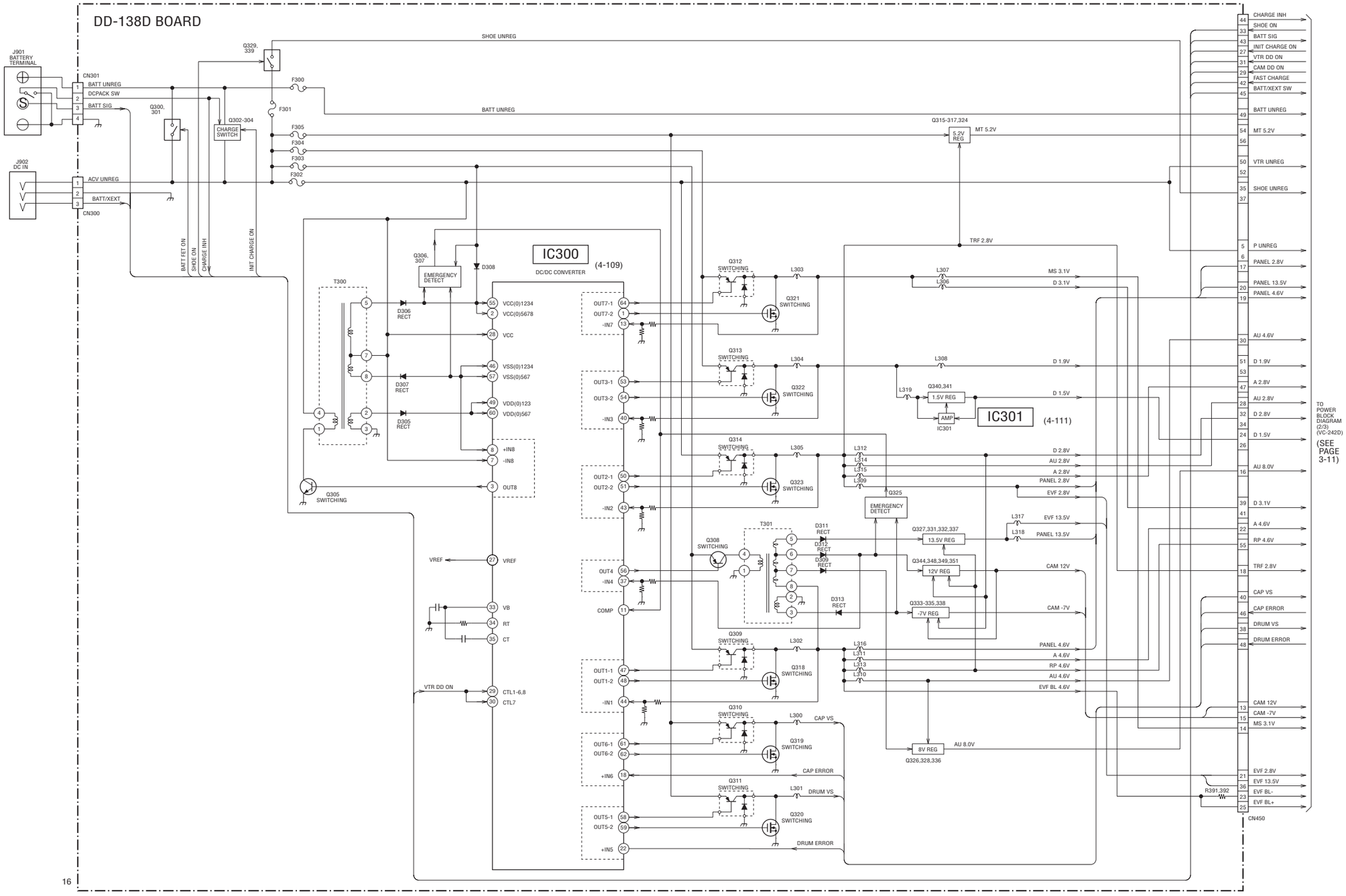

16

3-6. POWER BLOCK DIAGRAM (2/3)

( ) : Page No. shown in ( ) indicates the page to refer on the schematic diagram.

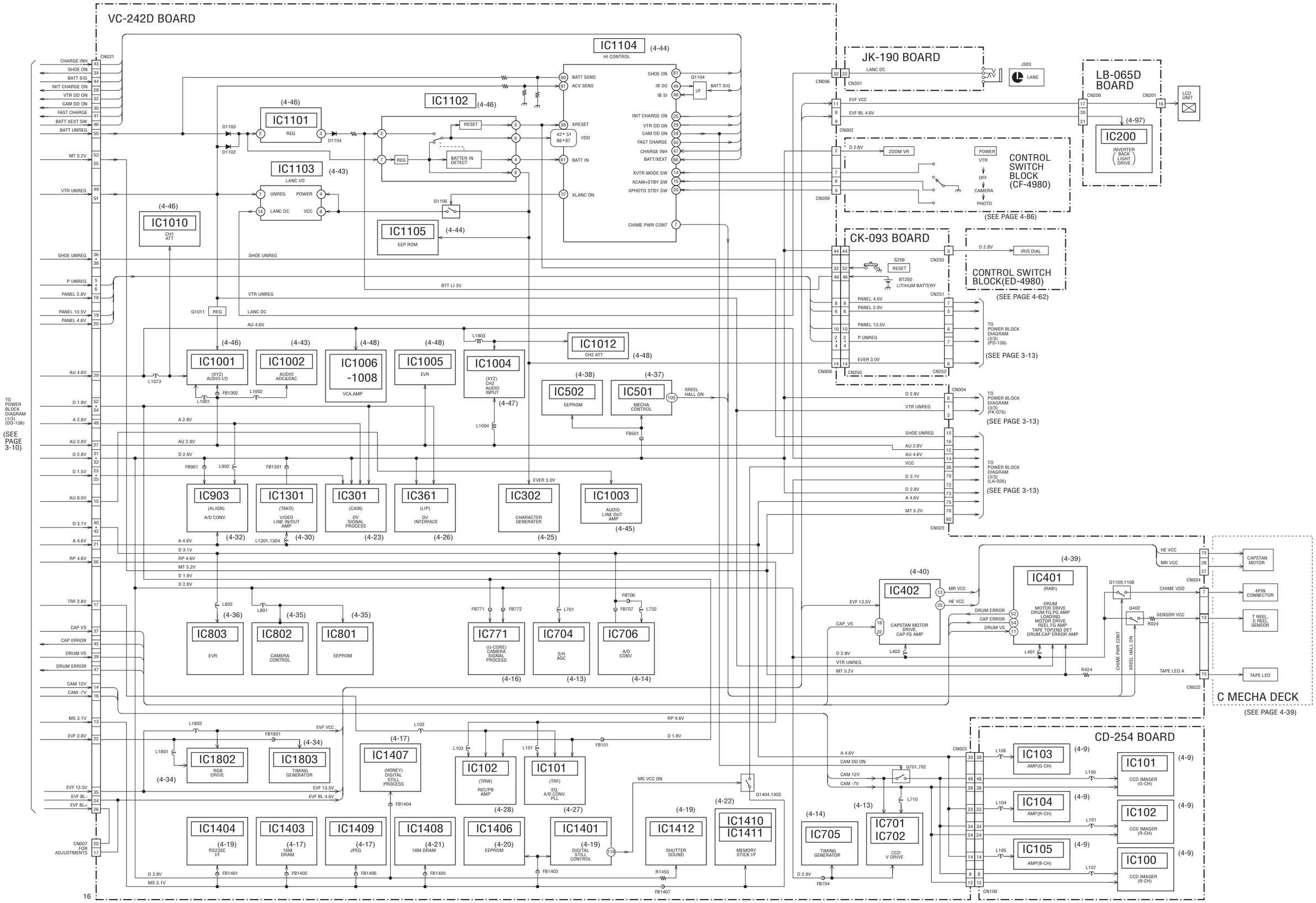

3-7. POWER BLOCK DIAGRAM (3/3)

( ) : Page No. shown in ( ) indicates the page to refer on the schematic diagram.

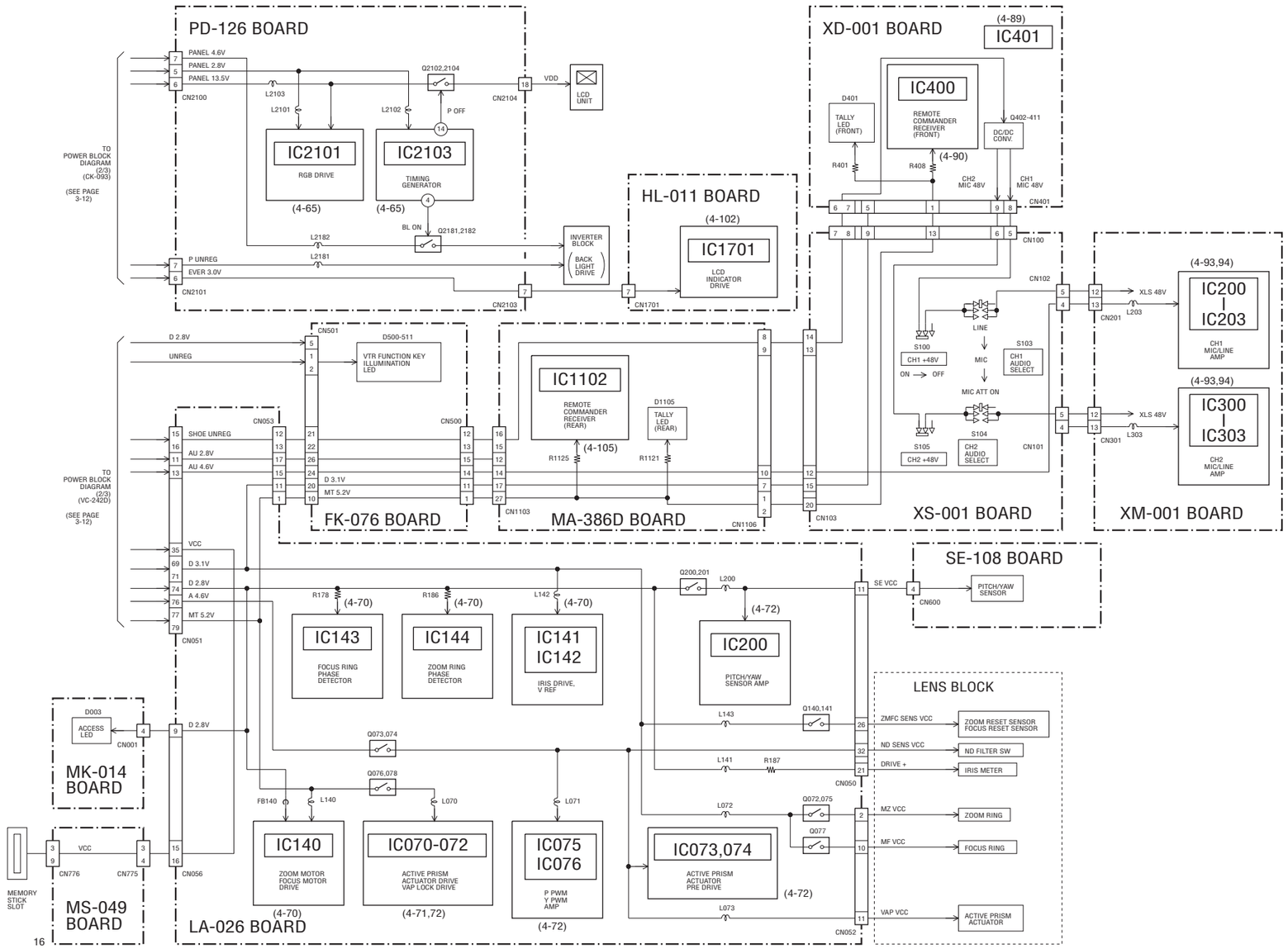

SECTION 4
PRINTED WIRING BOARDS AND SCHEMATIC DIAGRAMS

4-1. FRAME SCHEMATIC DIAGRAM (1/3)

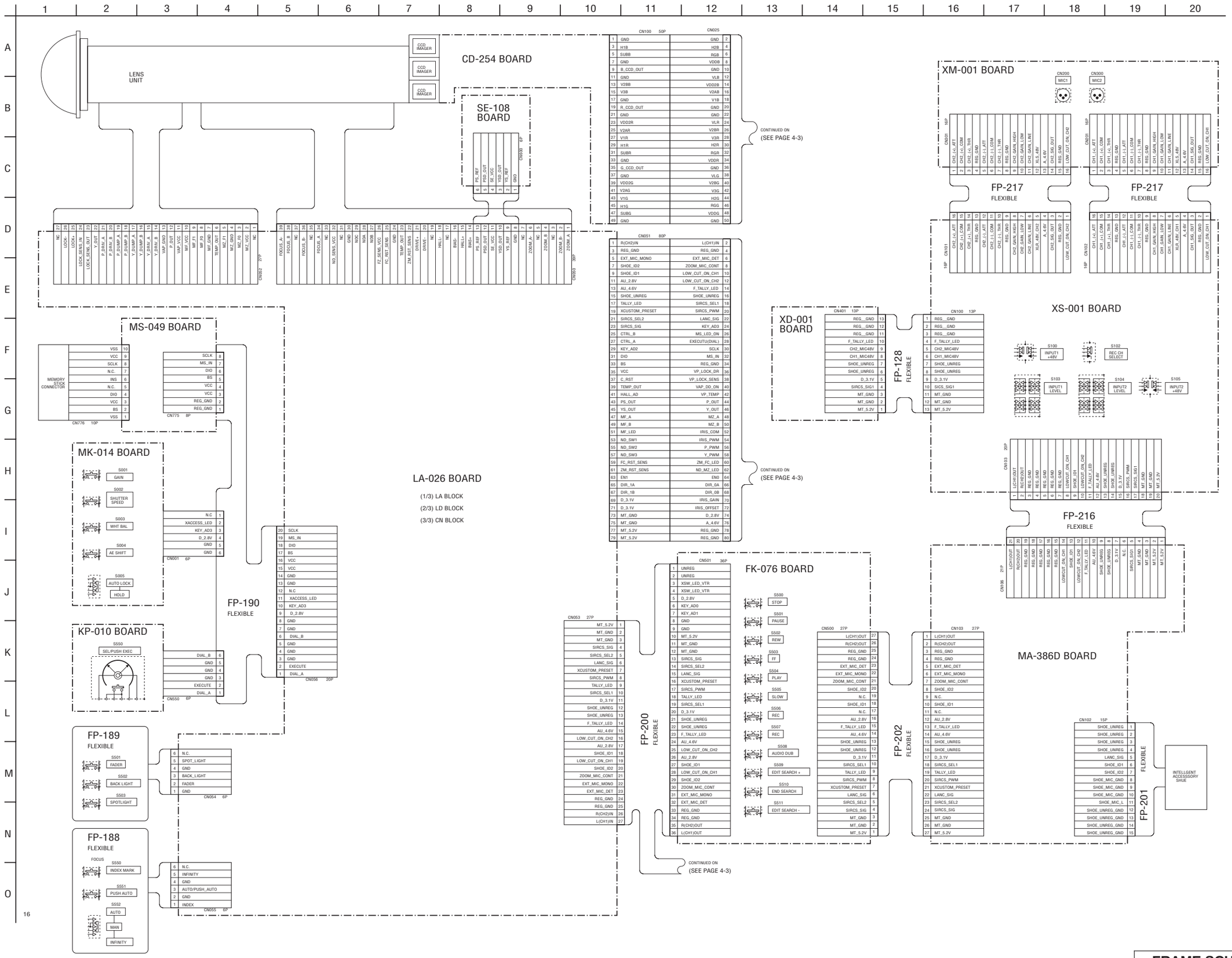

FRAME SCHEMATIC DIAGRAM (2/3)

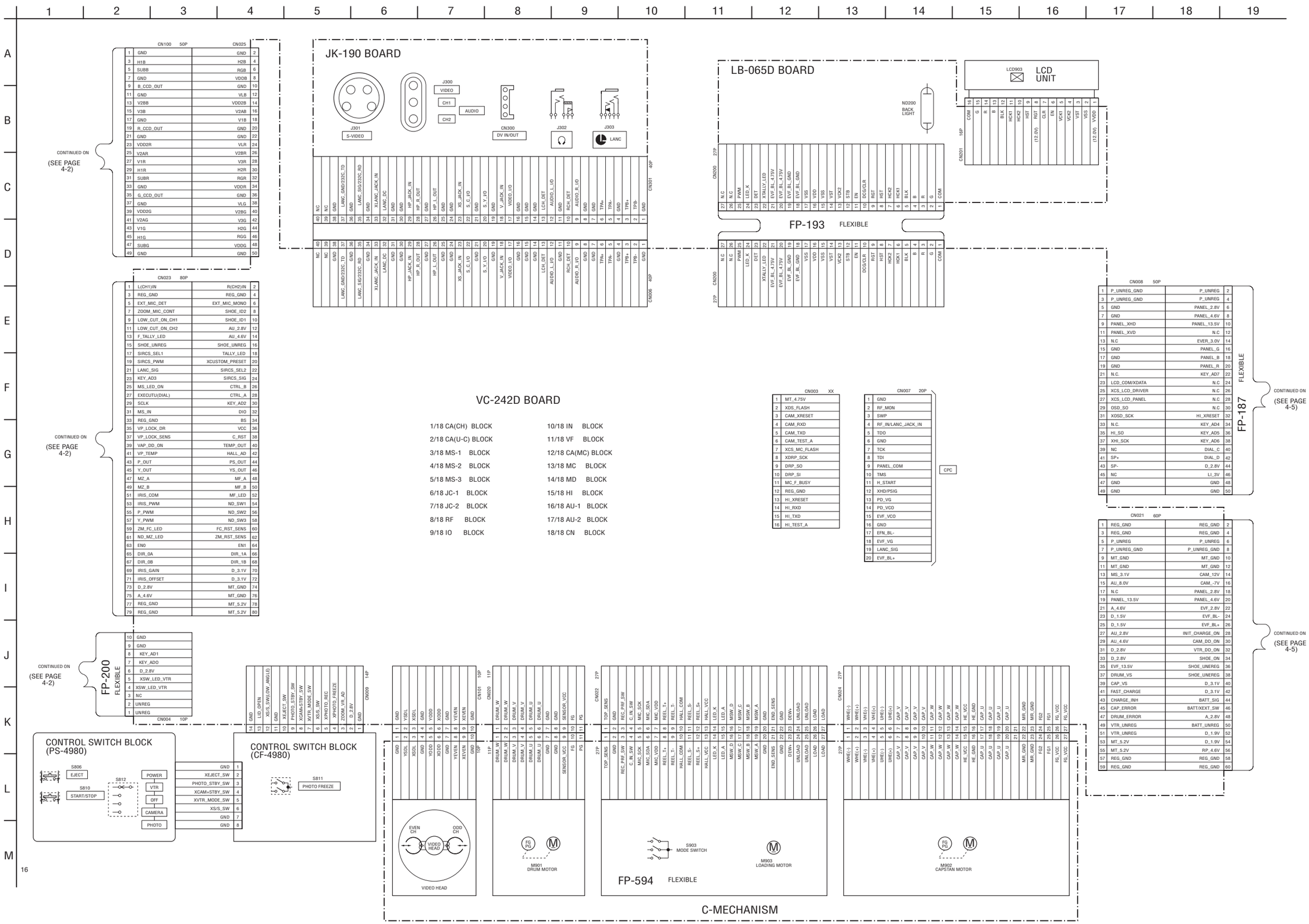

FRAME SCHEMATIC DIAGRAM (3/3)

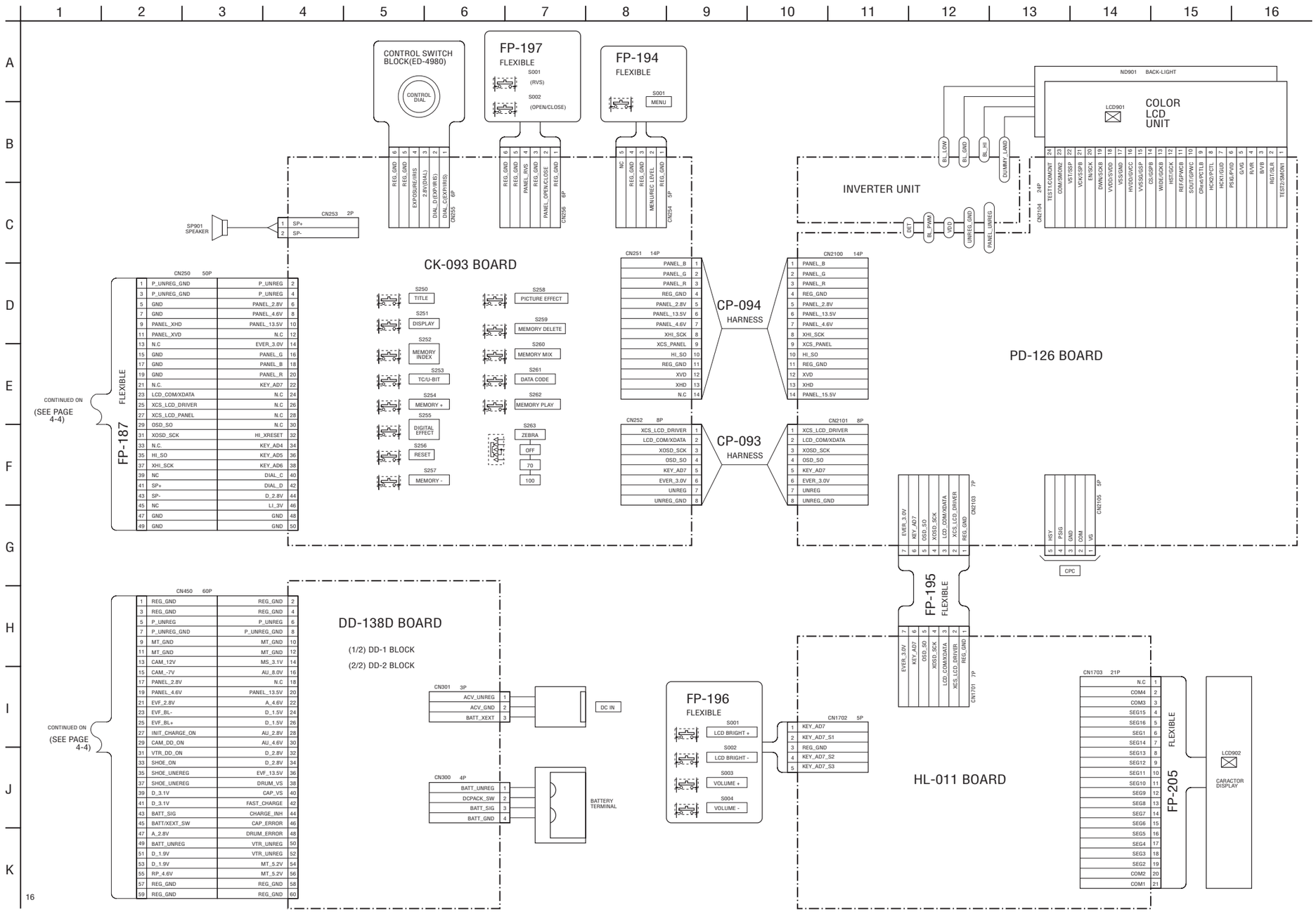

4-2. PRINTED WIRING BOARDS AND SCHEMATIC DIAGRAMS

THIS NOTE IS COMMON FOR WIRING BOARDS AND SCHEMATIC DIAGRAMS
(In addition to this, the necessary note is printed in each block)

(For printed wiring boards)
- ▒▒▒▒: Pattern from the side which enables seeing.
  (The other layers' patterns are not indicated.)
- Through hole is omitted.
- Circled numbers refer to waveforms.
- There are few cases that the part printed on diagram isn't mounted in this model.
- Chip parts.

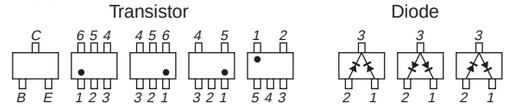

(For schematic diagrams)
- All capacitors are in mF unless otherwise noted. pF : m mF. 50V or less are not indicated except for electrolytics and tantalums.
- Chip resistors are 1/10W unless otherwise noted.
  kW=1000W, MW=1000kW.
- Caution when replacing chip parts.
  New parts must be attached after removal of chip.
  Be careful not to heat the minus side of tantalum capacitor, Because it is damaged by the heat.
- Some chip part will be indicated as follows.

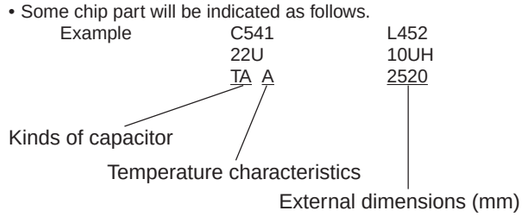

- Constants of resistors, capacitors, ICs and etc with XX indicate that they are not used.
  In such cases, the unused circuits may be indicated.
- All variable and adjustable resistors have characteristic curve B, unless otherwise noted.
- Signal name
  XEDIT → $\overline{\text{EDIT}}$ PB/XREC → PB/$\overline{\text{REC}}$
- : non flammable resistor
- : fusible resistor
- : panel designation
- : B+ Line *
- : B– Line *
- : IN/OUT direction of (+,–) B LINE. *
- : adjustment for repair. *
- Circled numbers refer to waveforms. *

* Indicated by the color red.

Note :	Note :
The components identified by mark ⚠ or dotted line with mark ⚠ are critical for safety. Replace only with part number specified.	Les composants identifiés par une marque ⚠ sont critiques pour la sécurité. Ne les remplacer que par une pièce portant le numéro spécifié.

(Measuring conditions voltage and waveform)
- Voltages and waveforms are measured between the measurement points and ground when camera shoots color bar chart of pattern box. They are reference values and reference waveforms. *
  (VOM of DC 10 MΩ input impedance is used.).
- Voltage values change depending upon input impedance of VOM used.) *

1. Connection

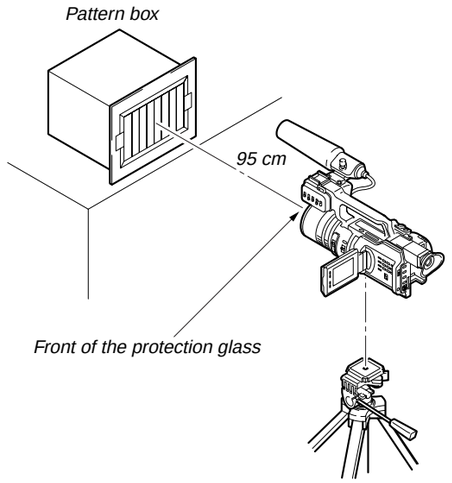

2. Adjust the distance so that the output waveform of Fig. a and the Fig. b can be obtain.

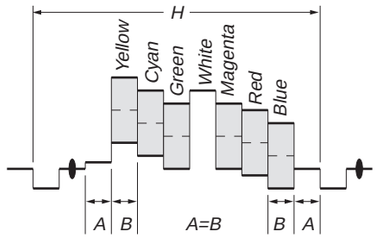

Fig. a (Video output terminal output waveform)

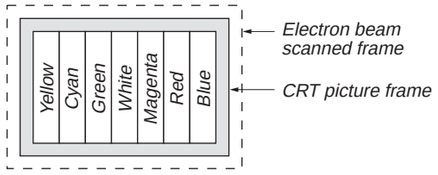

Fig.b (Picture on monitor TV)

When indicating parts by reference number, pleas include the board name.

For Schematic Diagram
- Refer to page 4-11 for printed wiring board.
- Refer to page 4-113 for waveforms.

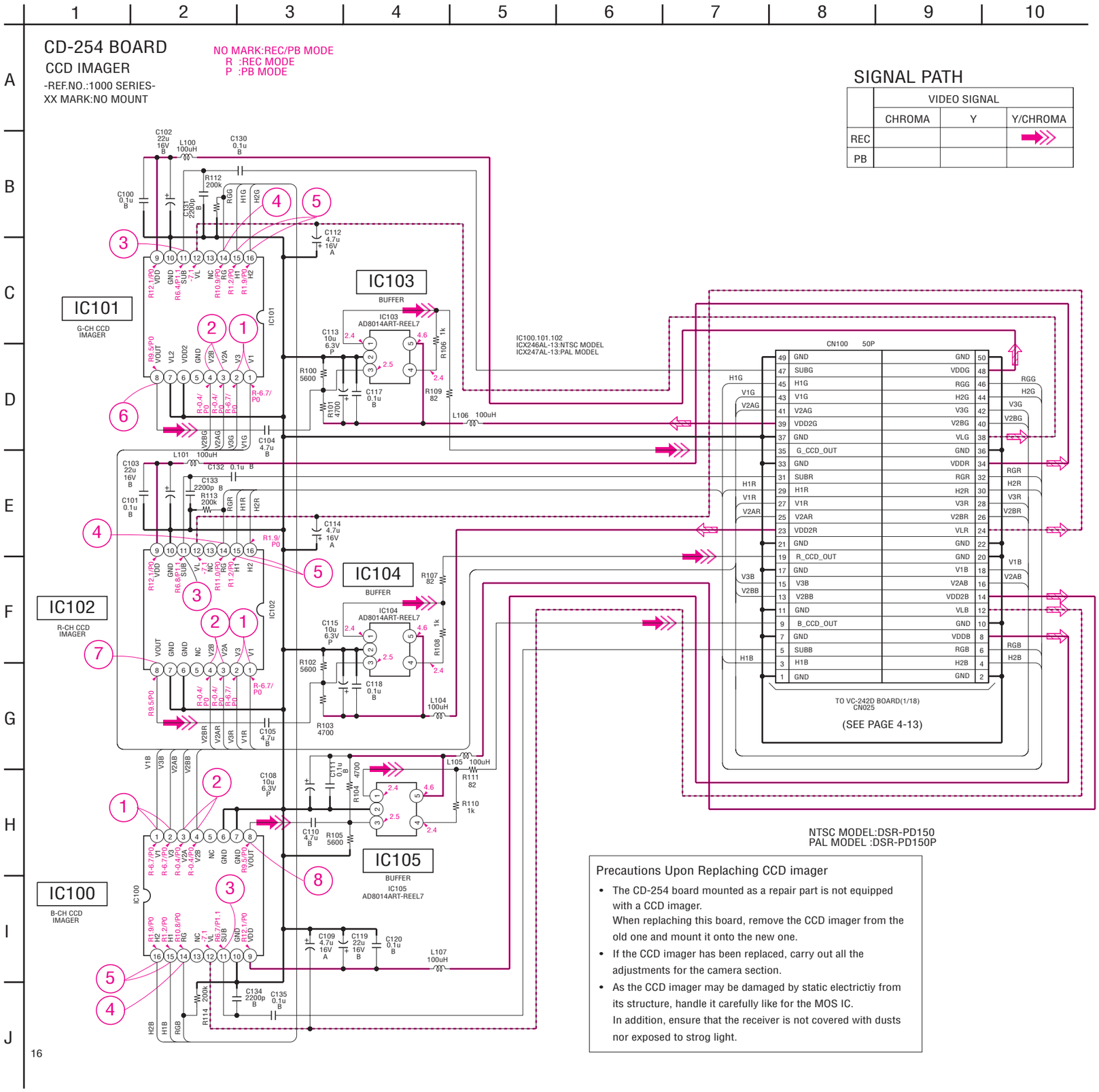

Precautions Upon Replaching CCD imager

- The CD-254 board mounted as a repair part is not equipped with a CCD imager.
  When replaching this board, remove the CCD imager from the old one and mount it onto the new one.
- If the CCD imager has been replaced, carry out all the adjustments for the camera section.
- As the CCD imager may be damaged by static electrictiy from its structure, handle it carefully like for the MOS IC.
  In addition, ensure that the receiver is not covered with dusts nor exposed to strog light.

CD-254 (CCD IMAGER) PRINTED WIRING BOARD

— Ref. No. CD-254 Board; 1,000 Series —

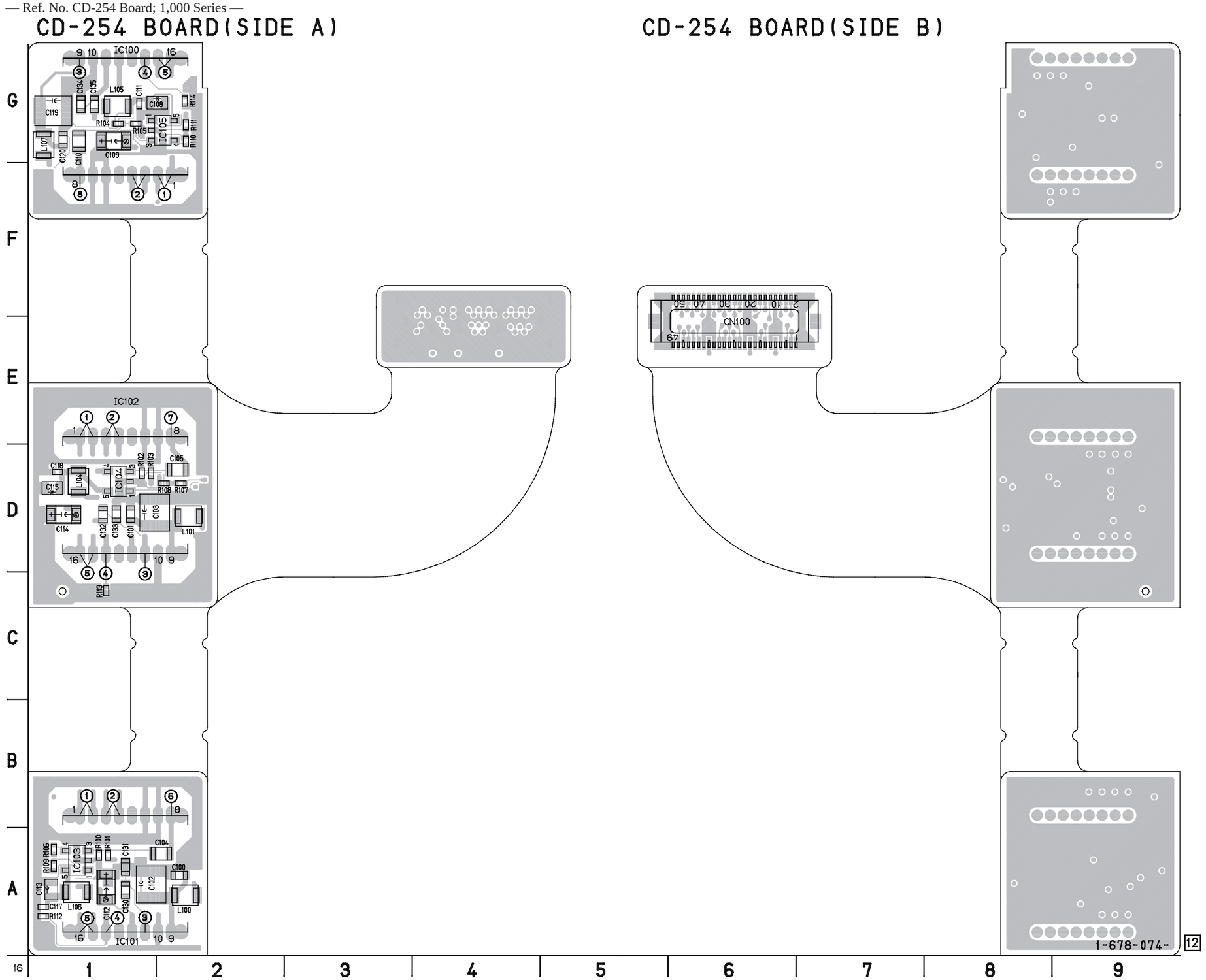

For printed wiring board

- Refer to page 4-118 for parts location.
- This board is four-layer print board. However, the patterns of layers two and three have not been included in the diagram.

There are few cases that the part printed on this diagram isn't mounted in this model.

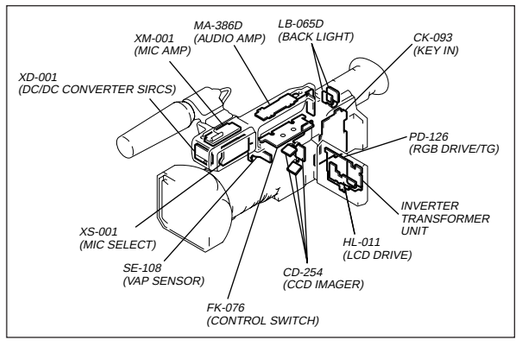

For Schematic Diagram

- Refer to page 4-51 for printed wiring board.
- Refer to page 4-113 for waveforms.

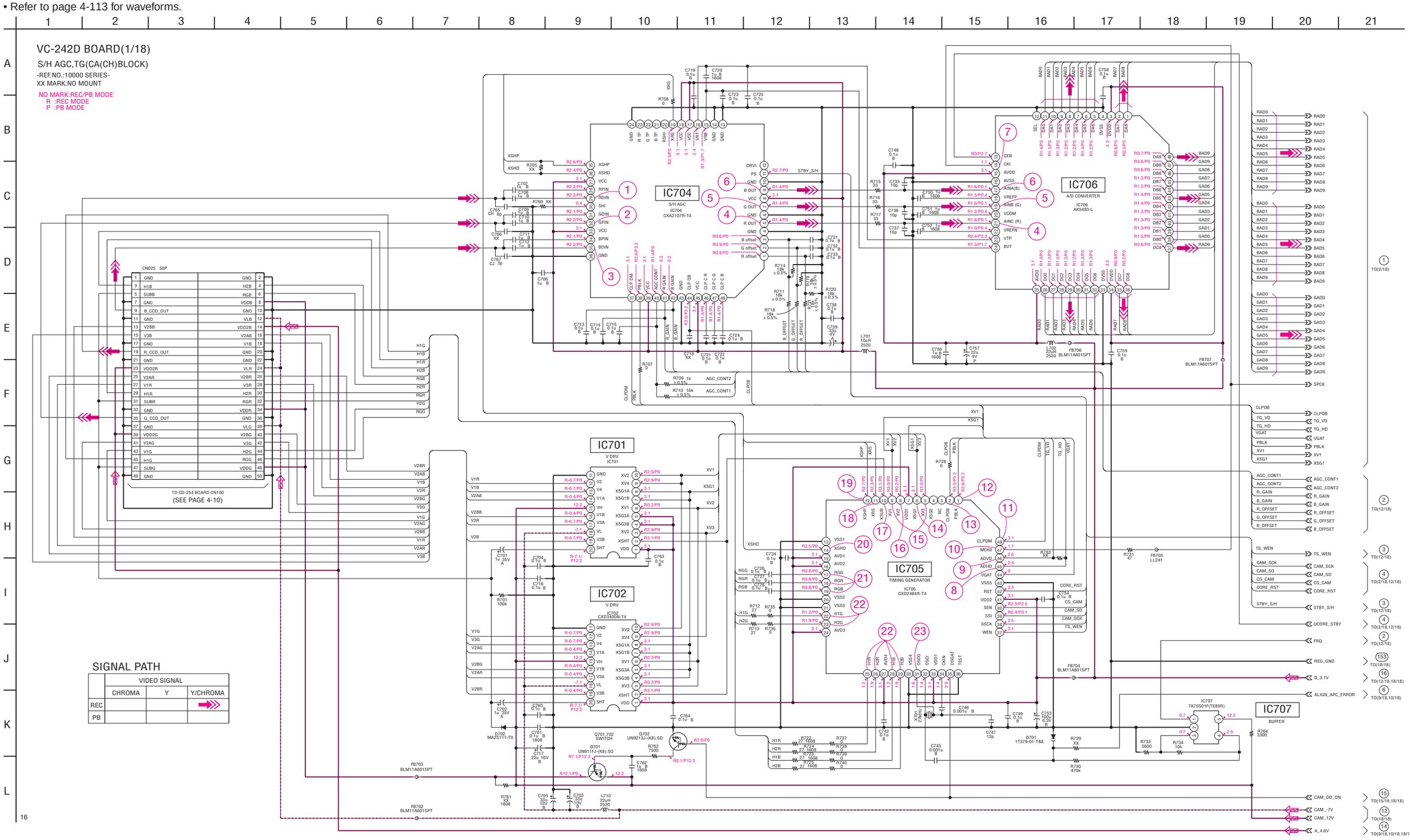

S/H AGC, TG
VC-242D (1/18)

For Schematic Diagram
- Refer to page 4-51 for printed wiring board.
- Refer to page 4-114 for waveform.

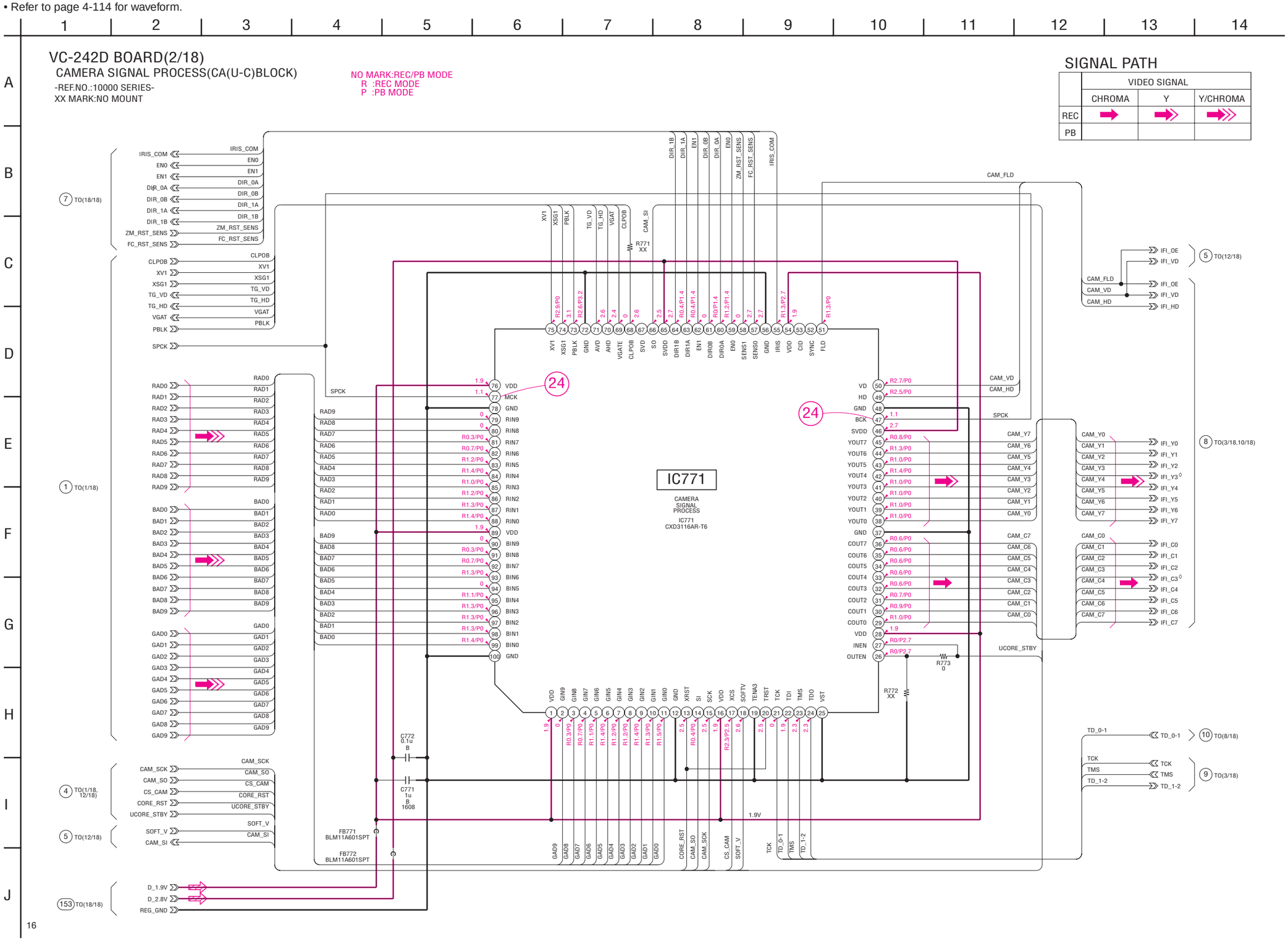

For Schematic Diagram

• Refer to page 4-51 for printed wiring board.

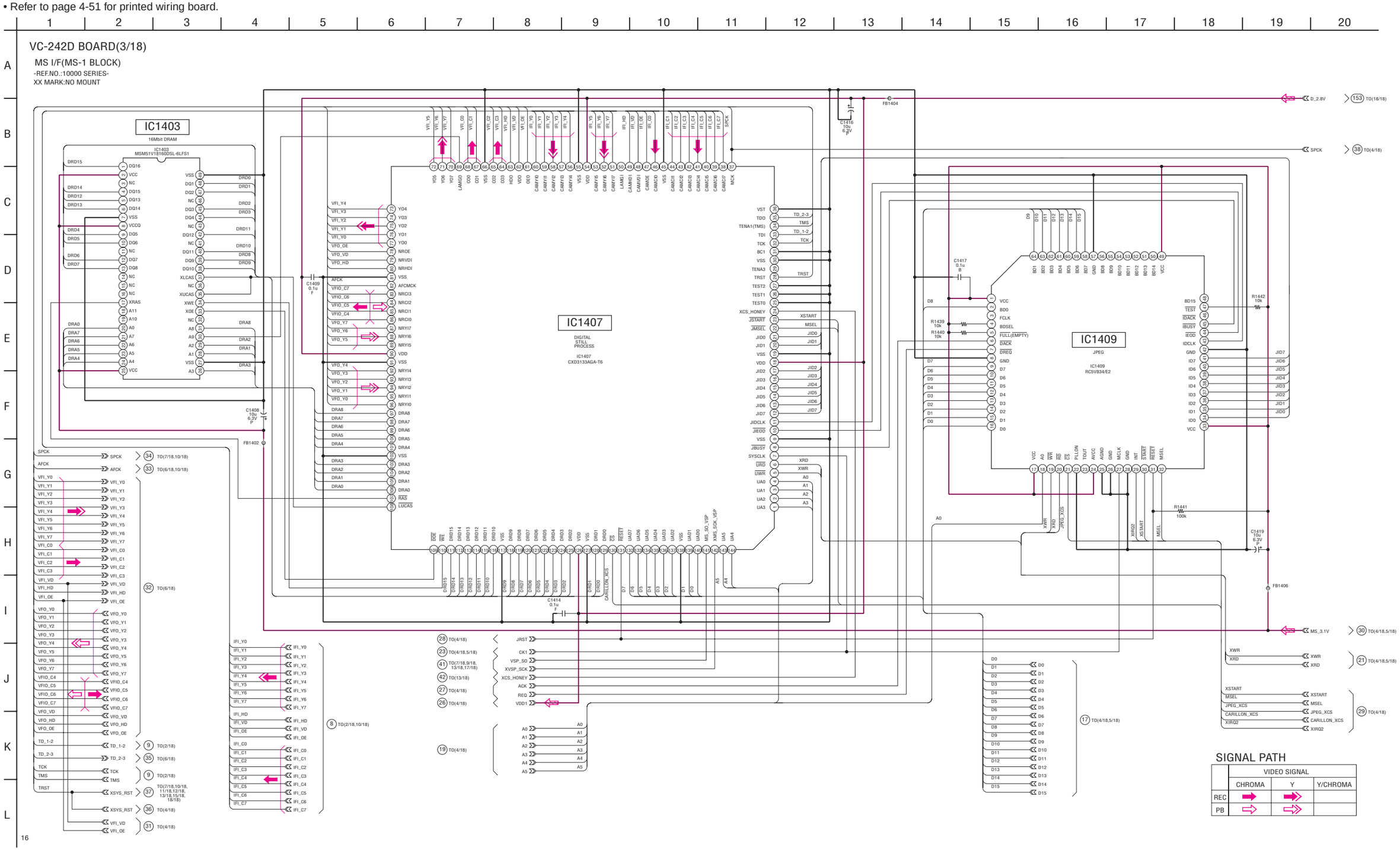

MS I/F
VC-242D (3/18)

For Schematic Diagram

- Refer to page 4-51 for printed wiring board.
- Refer to page 4-114 for waveform.

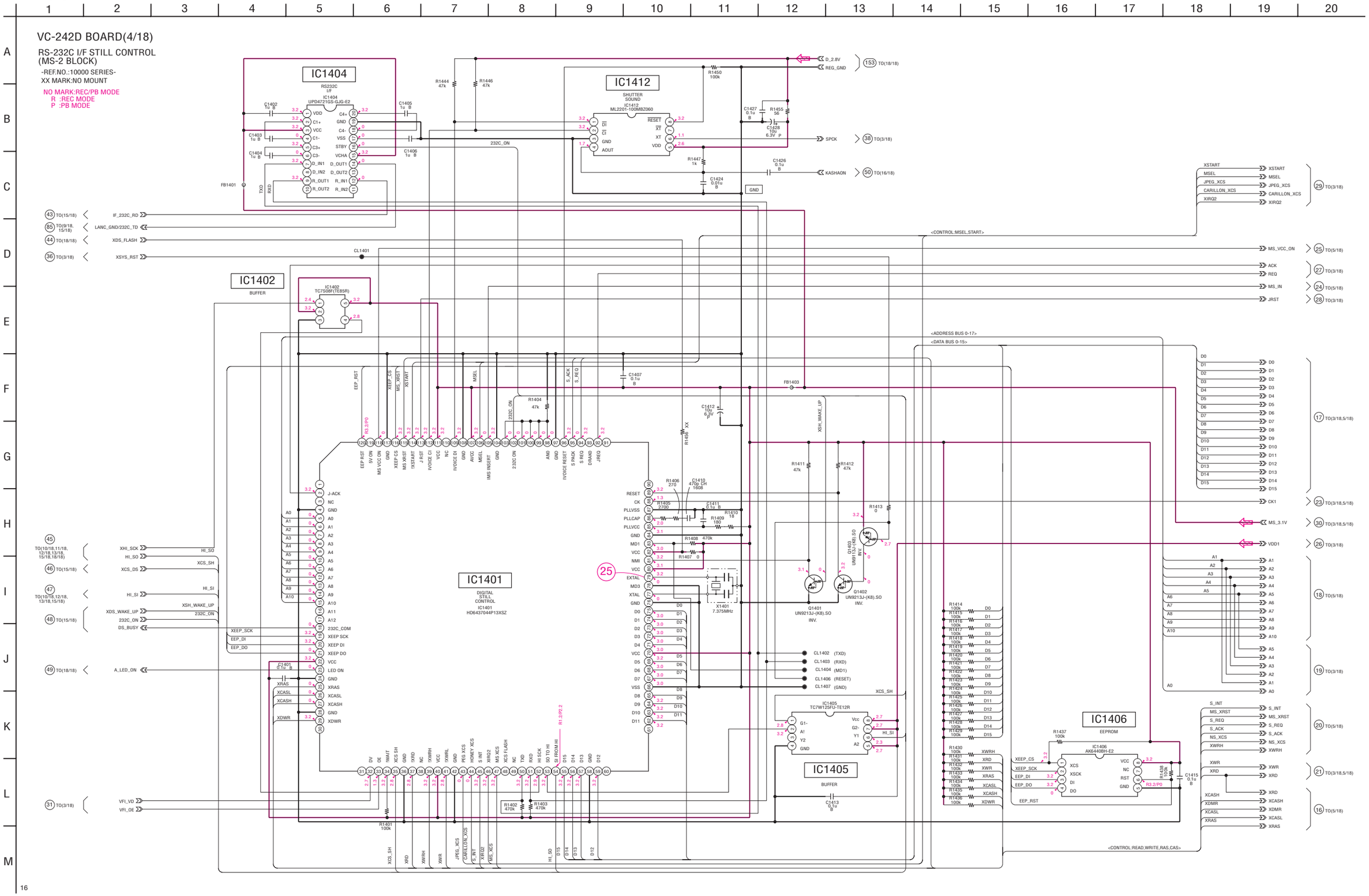

RS232C I/F, STILL CONTROL
VC-242D (4/18)

For Schematic Diagram
- Refer to page 4-51 for printed wiring board.
- Refer to page 4-114 for waveform.

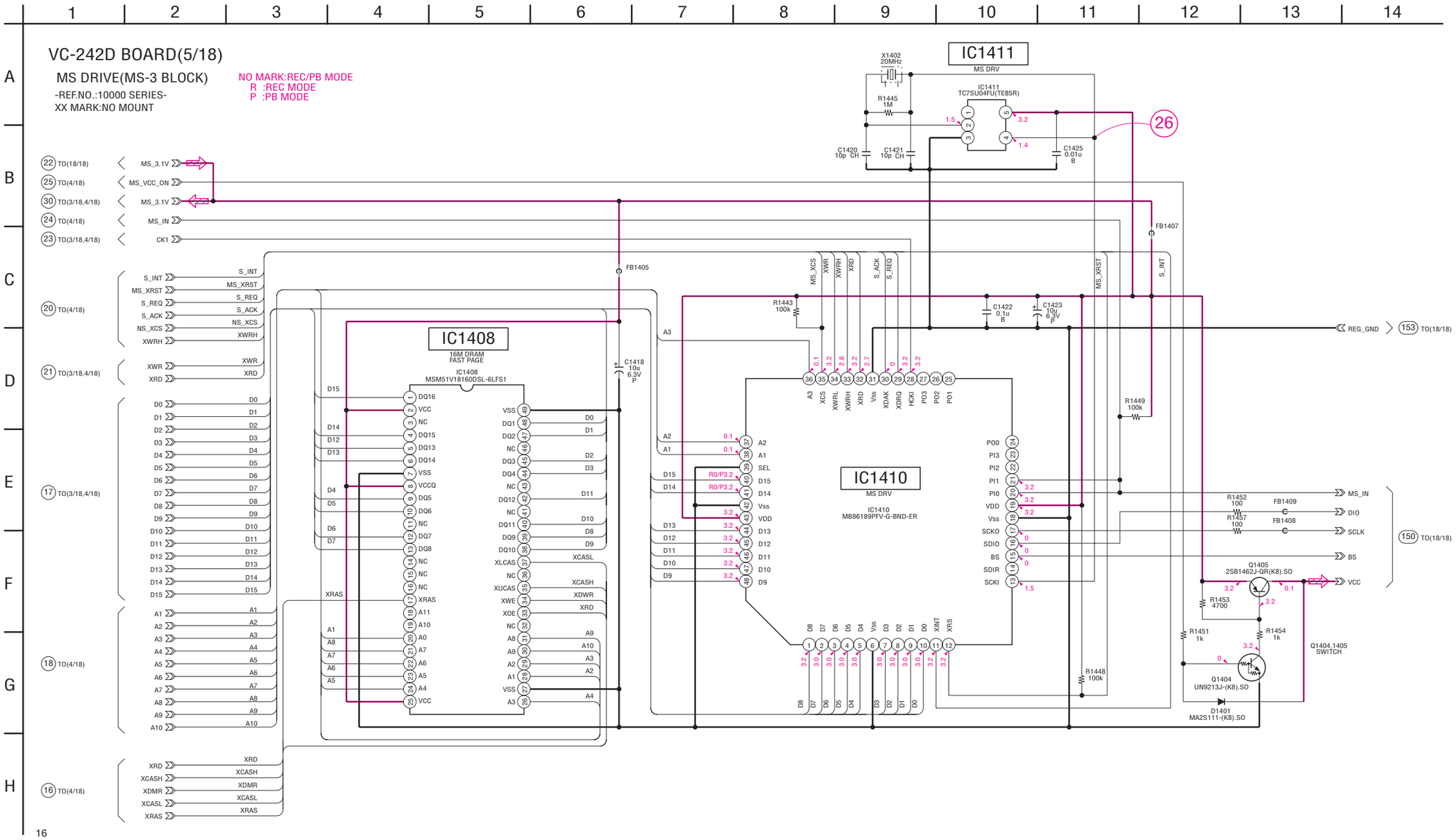

MS DRIVE
VC-242D (5/18)

For Schematic Diagram

- Refer to page 4-51 for printed wiring board.
- Refer to page 4-114 for waveforms.

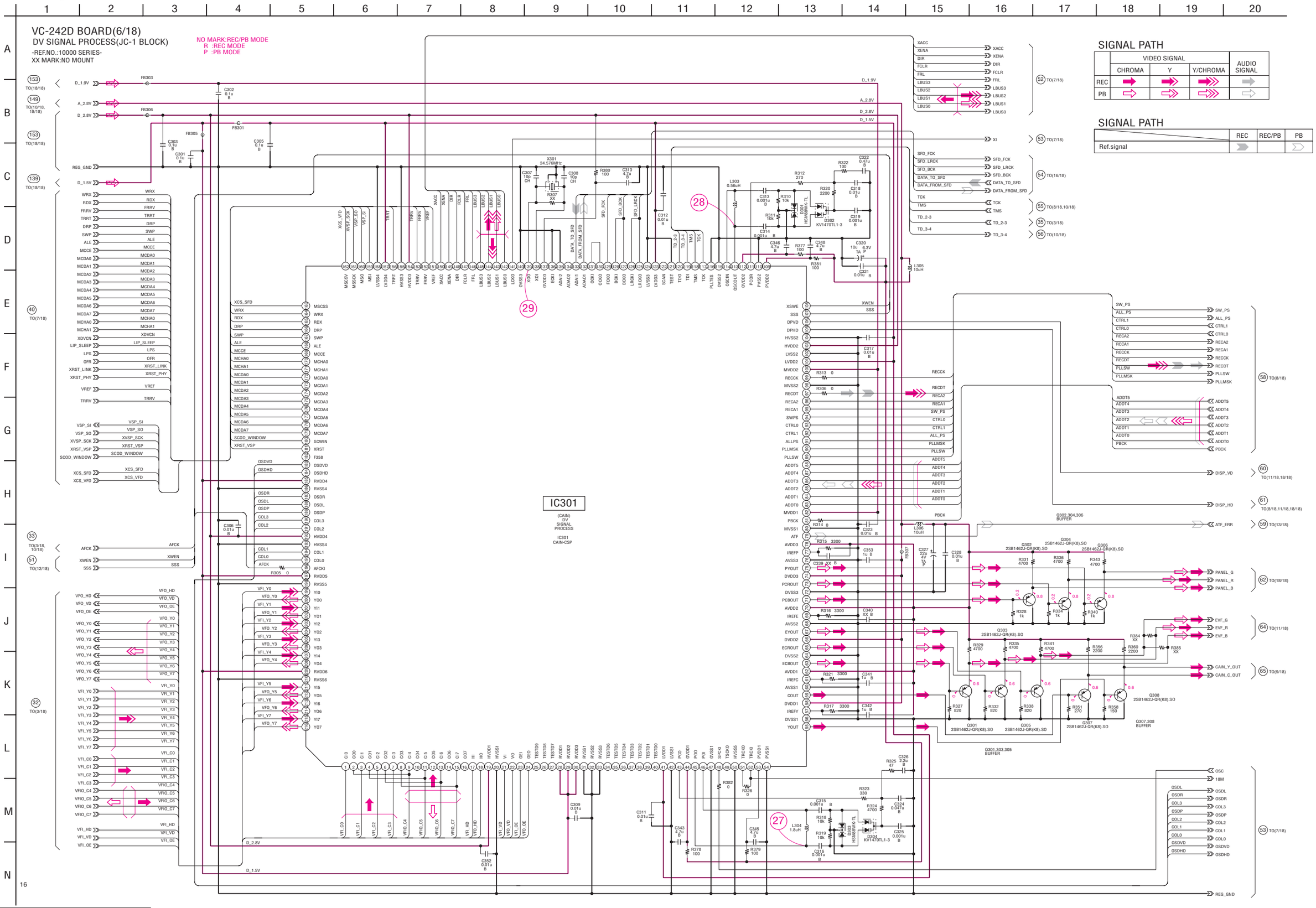

DV SIGNAL PROCESS
VC-242D (6/18)

For Schematic Diagram

• Refer to page 4-51 for printed wiring board.

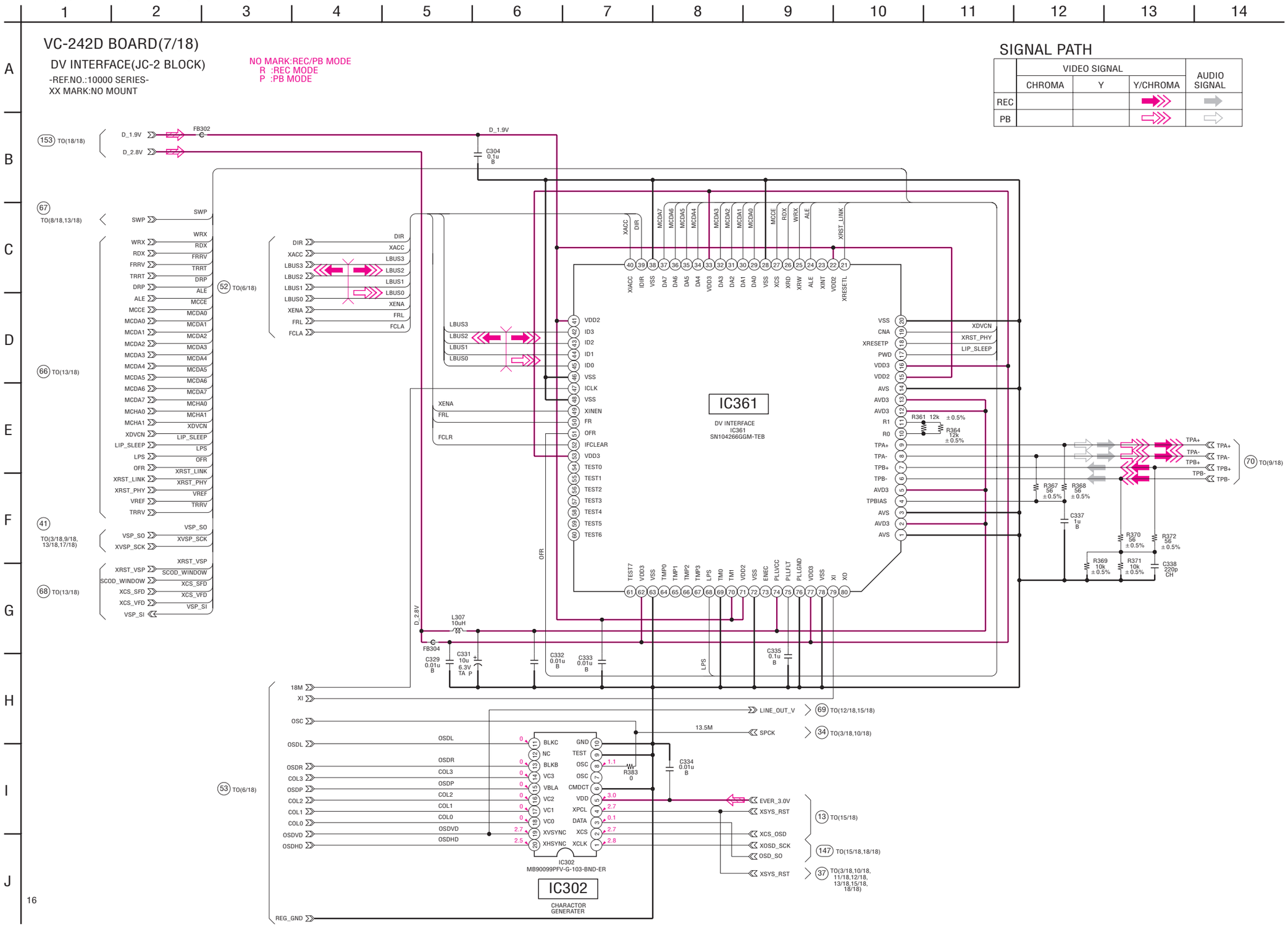

DV INTERFACE
VC-242D (7/18)

For Schematic Diagram

- Refer to page 4-51 for printed wiring board.
- Refer to page 4-114 for waveforms.

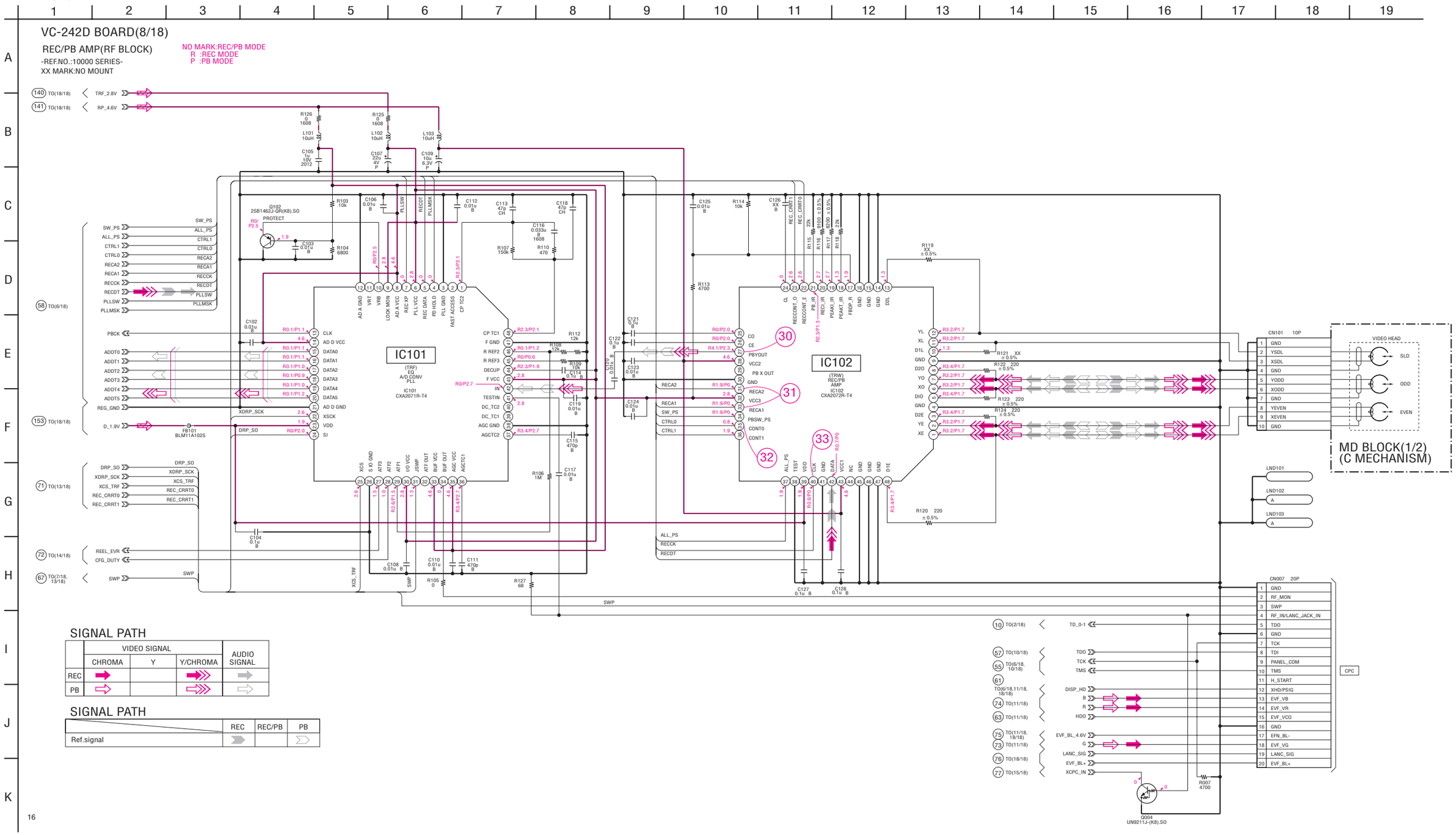

For Schematic Diagram

- Refer to page 4-51 for printed wiring board.
- Refer to page 4-114 for waveforms.

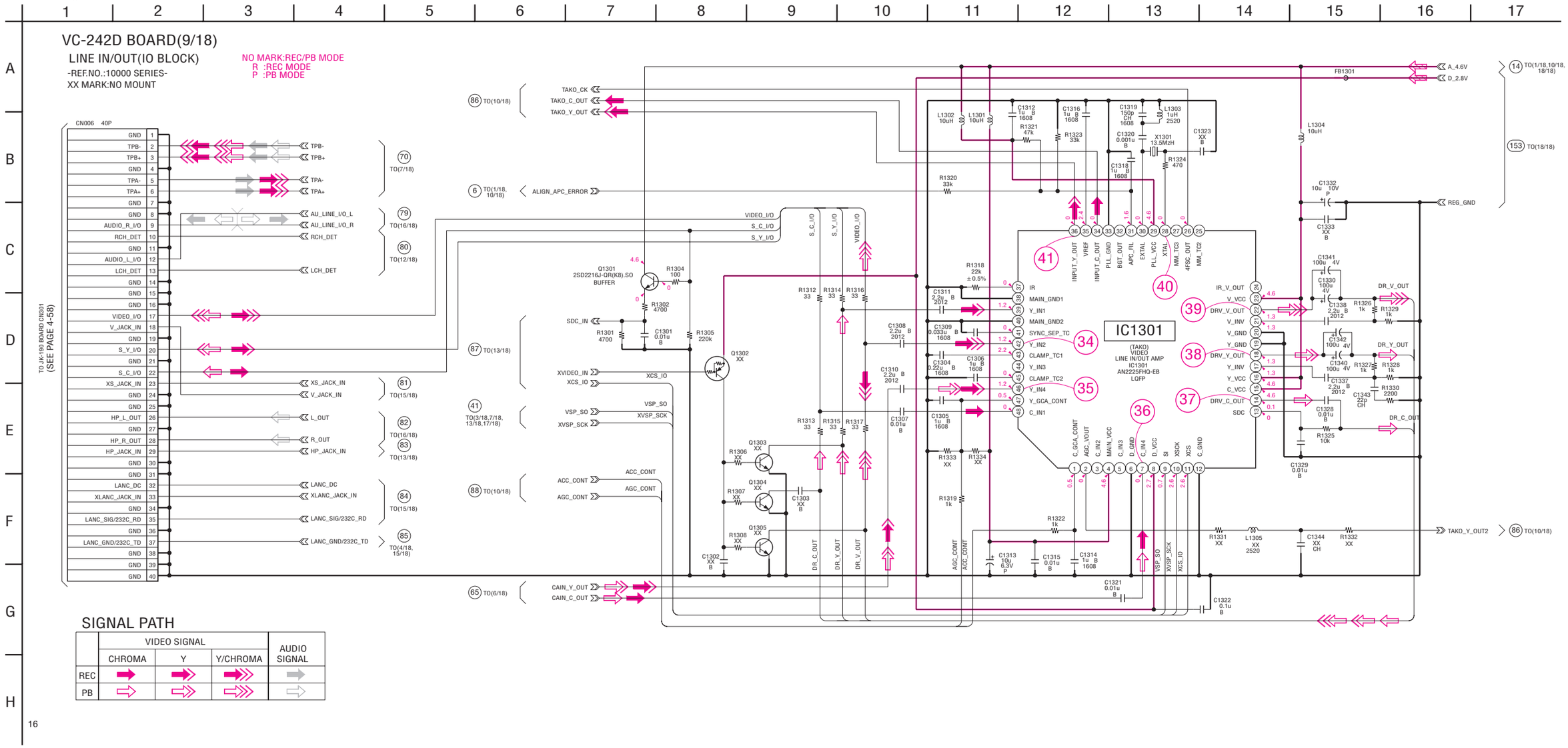

LINE IN/OUT
VC-242D (9/18)

For Schematic Diagram

- Refer to page 4-51 for printed wiring board.
- Refer to page 4-114 for waveforms.

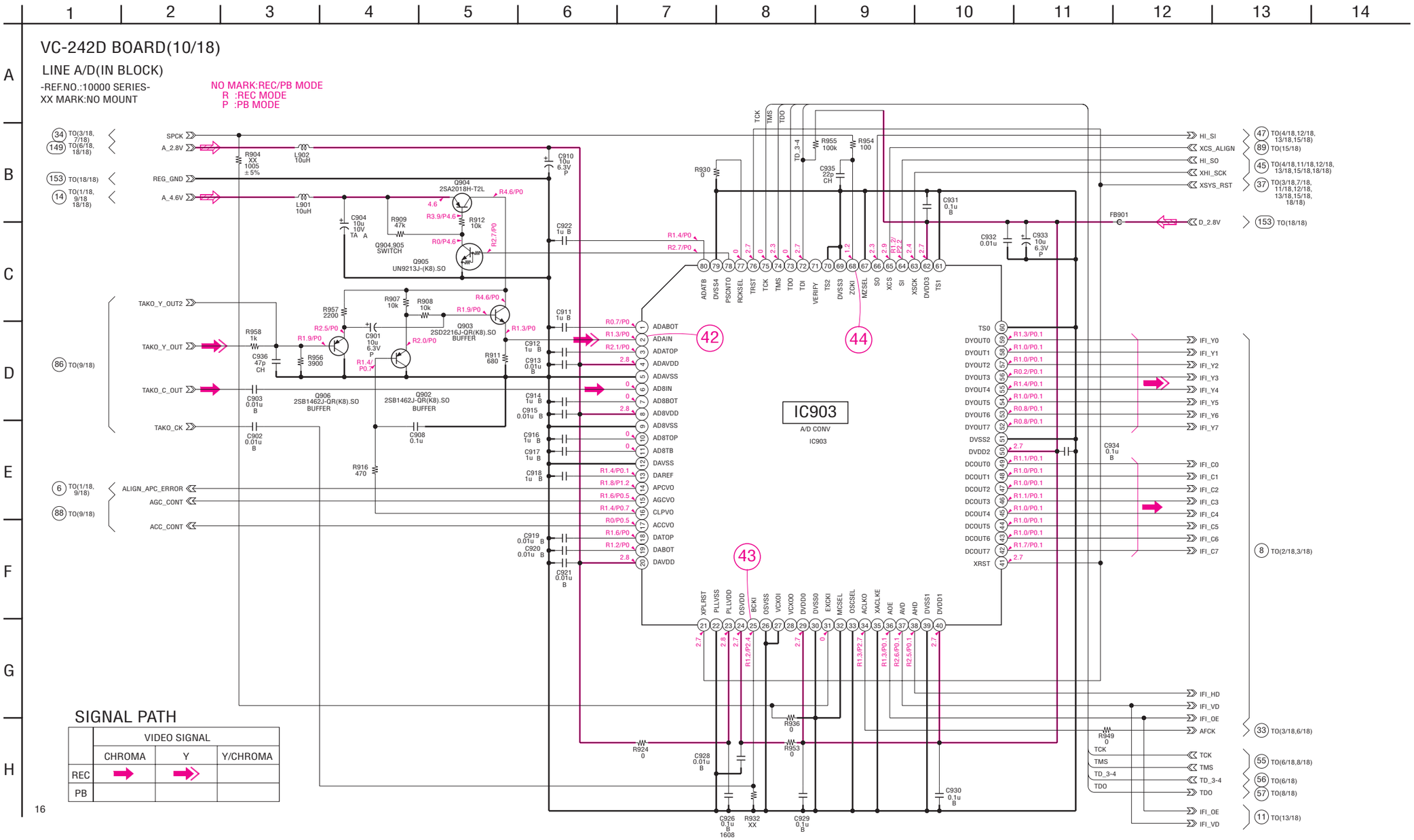

For Schematic Diagram
- Refer to page 4-51 for printed wiring board.
- Refer to page 4-115 for waveforms.

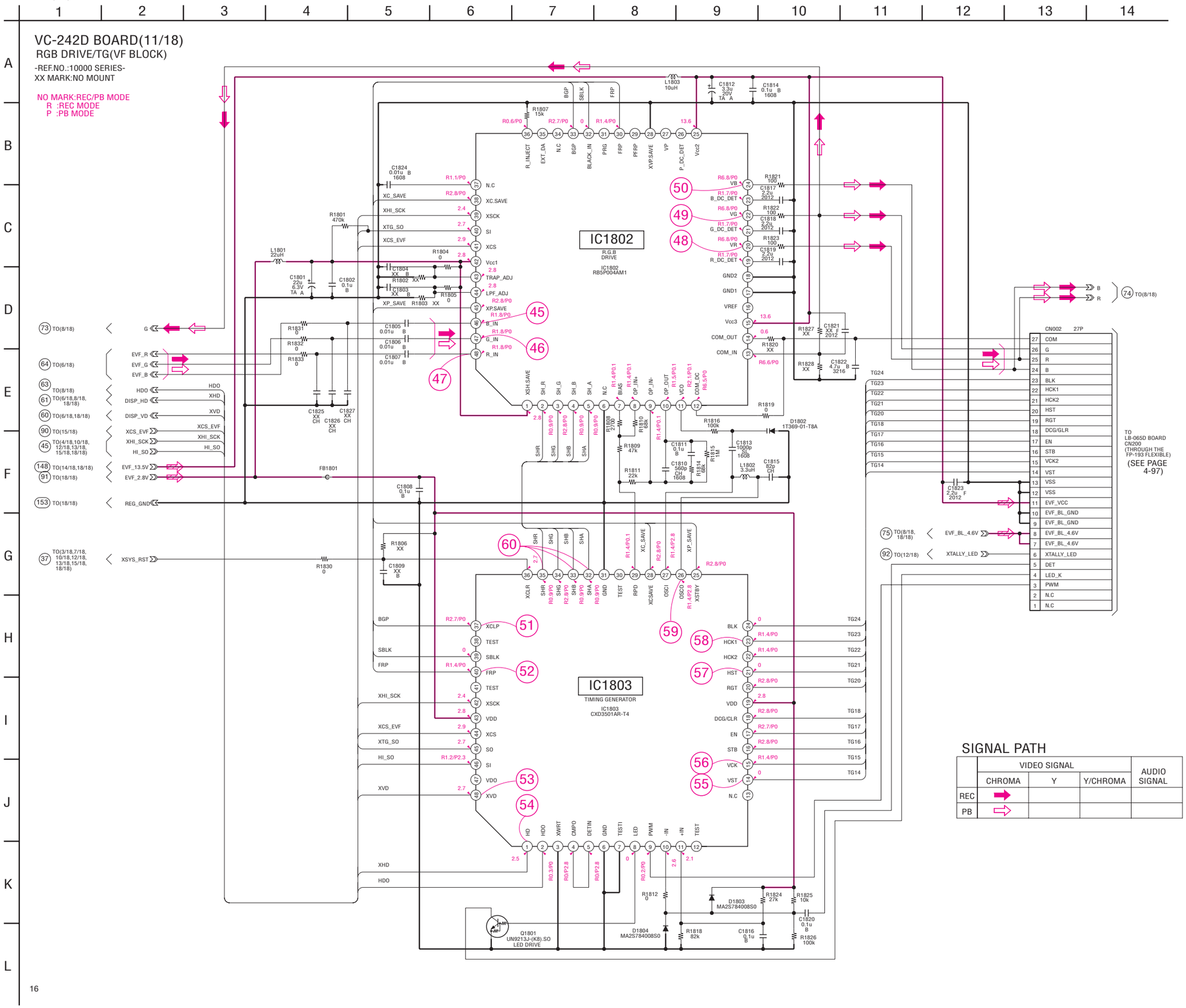

RGB DRIVE, TG
VC-242D (11/18)

For Schematic Diagram

- Refer to page 4-51 for printed wiring board.
- Refer to page 4-115 for waveform.

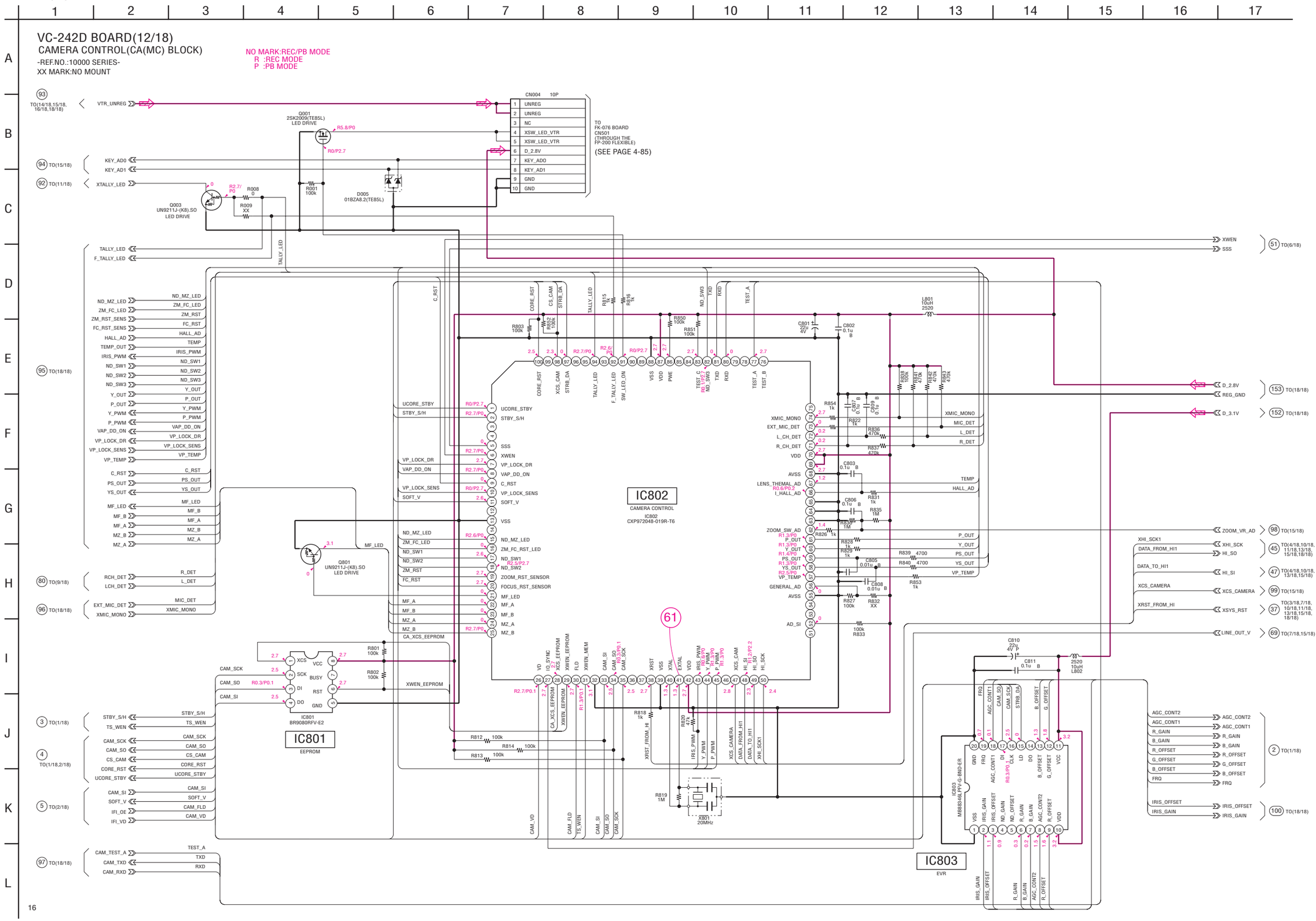

CAMERA CONTROL
VC-242D (12/18)

For Schematic Diagram

- Refer to page 4-51 for printed wiring board.
- Refer to page 4-115 for waveform.

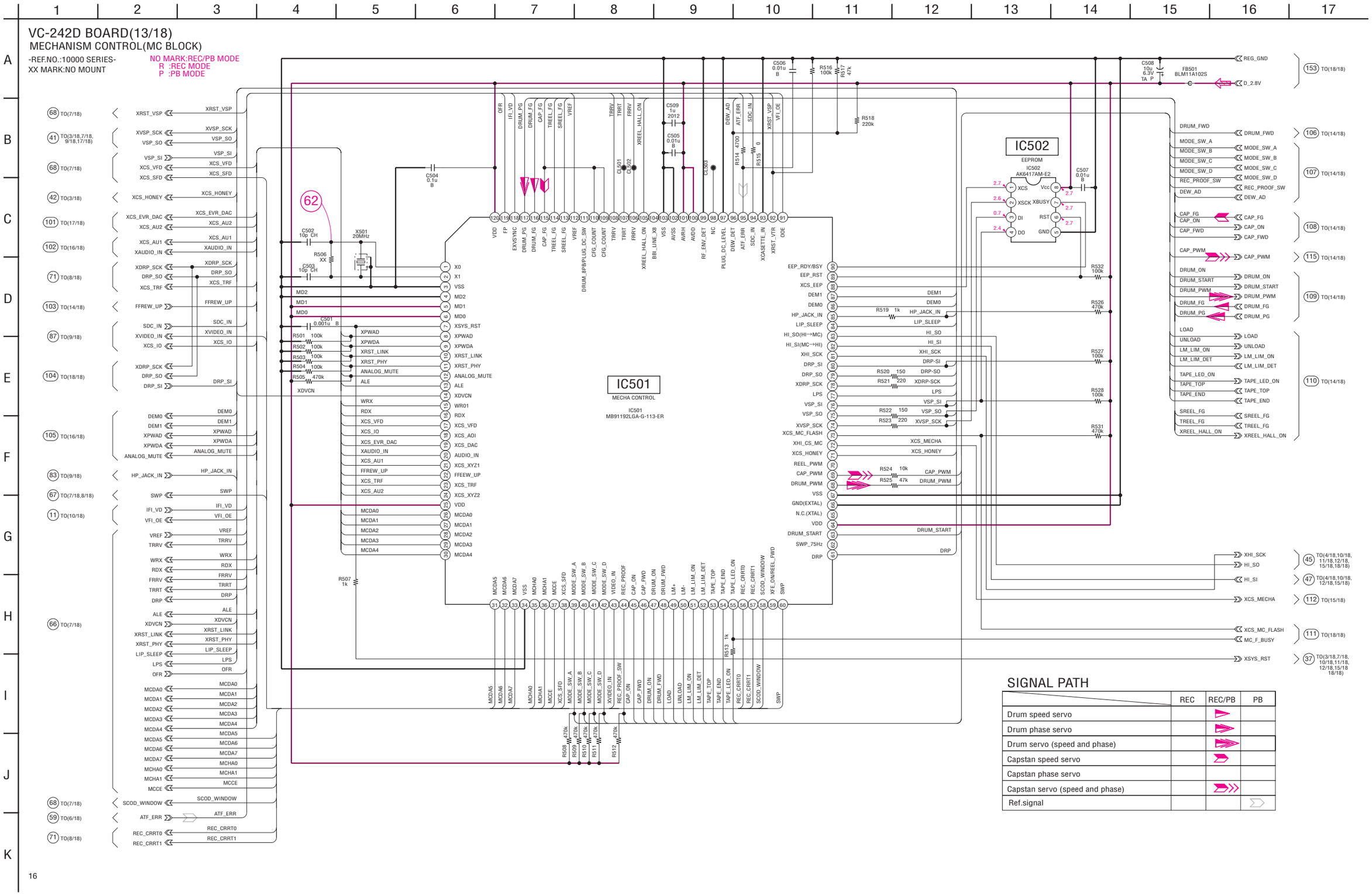

MECHANISM CONTROL
VC-242D (13/18)

For Schematic Diagram

- Refer to page 4-51 for printed wiring board.
- Refer to page 4-115 for waveforms.

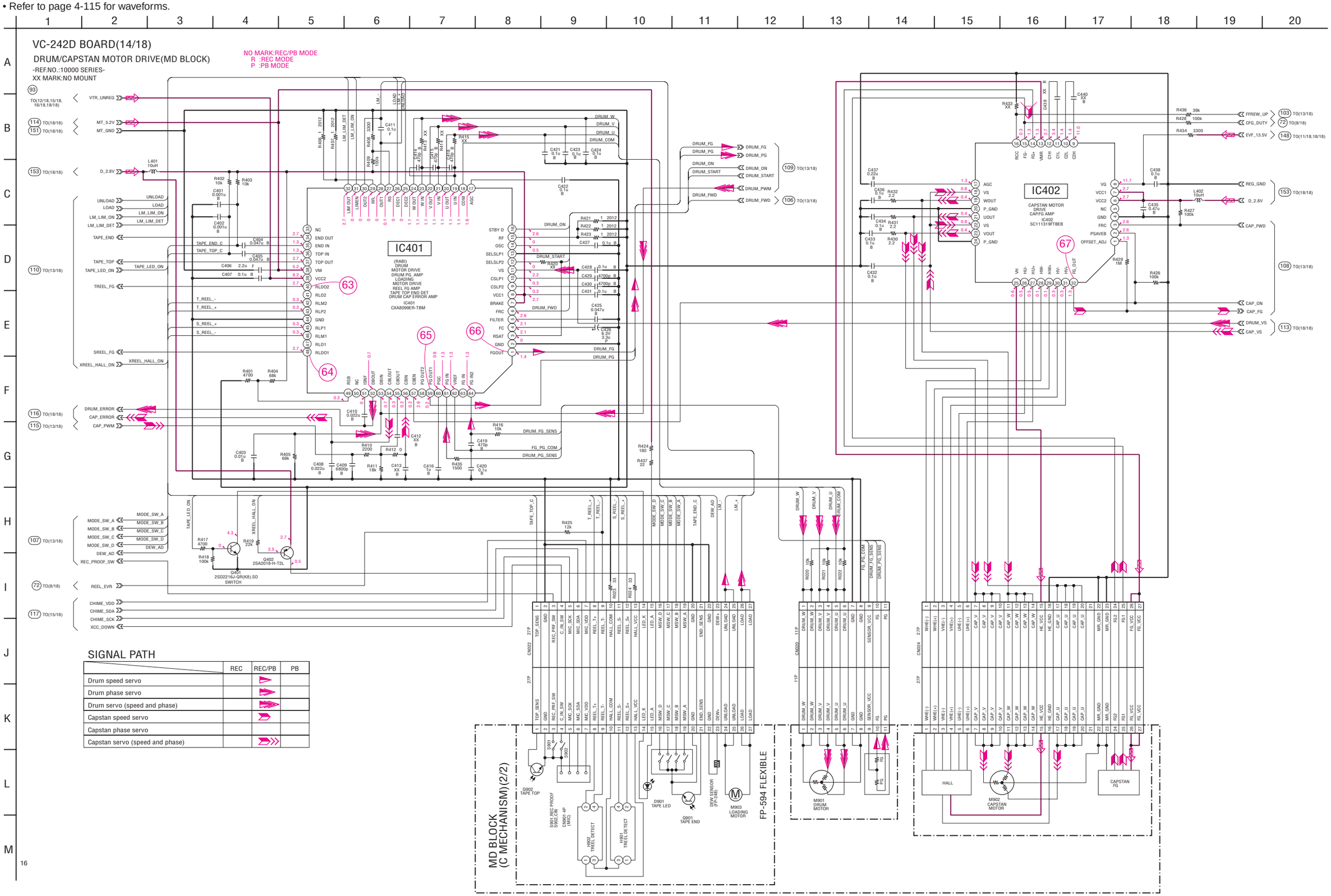

FP-594 (LOADING MOTOR, S/T REEL SENSOR) PRINTED WIRING BOARD

— Ref. No. FP-594 Flexible Board; 2,000 Series —

FP-594 BOARD

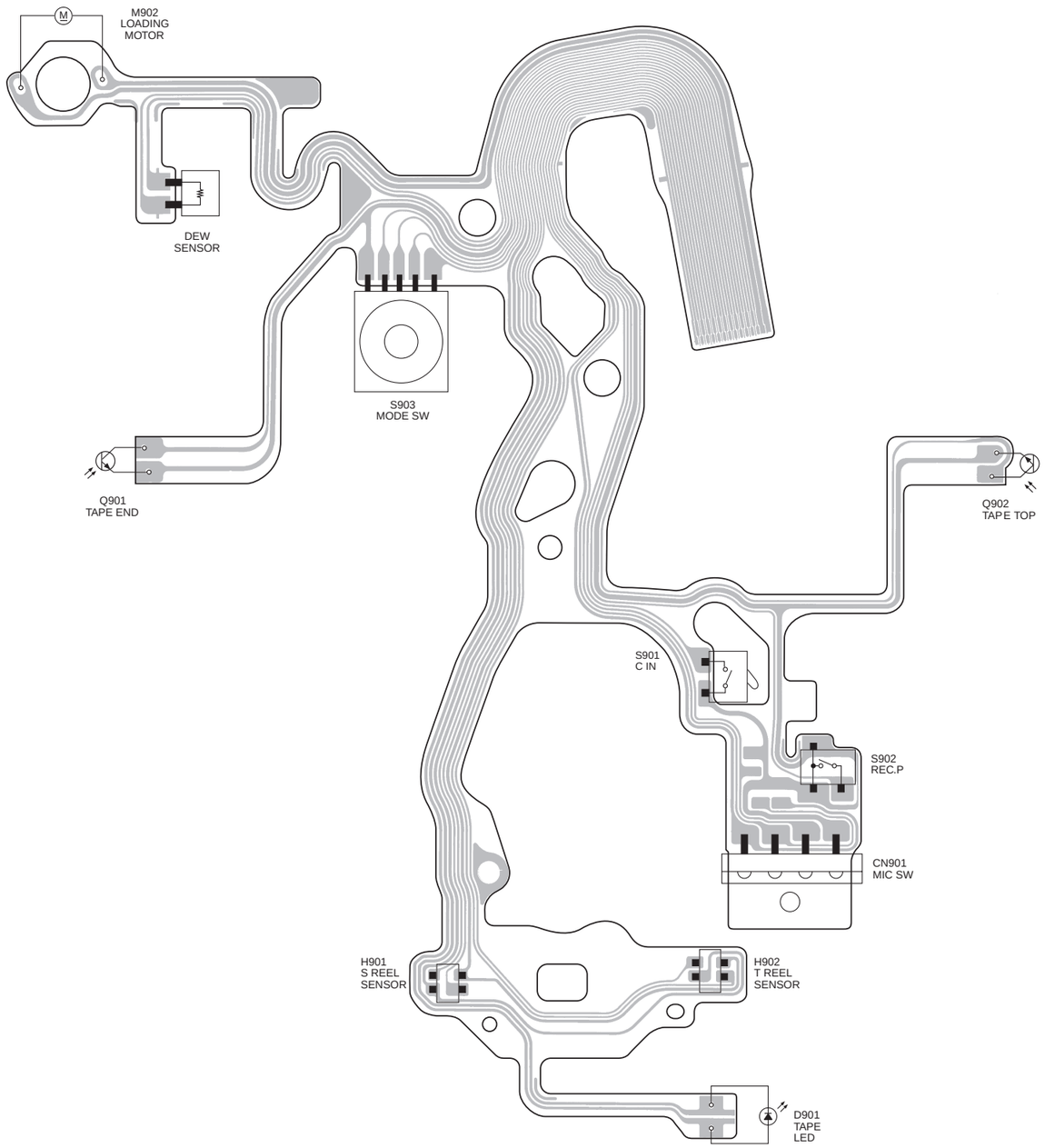

LOADING MOTOR, S/T REEL SENSOR
FP-594

For Schematic Diagram

- Refer to page 4-51 for printed wiring board.
- Refer to page 4-115 for waveforms.

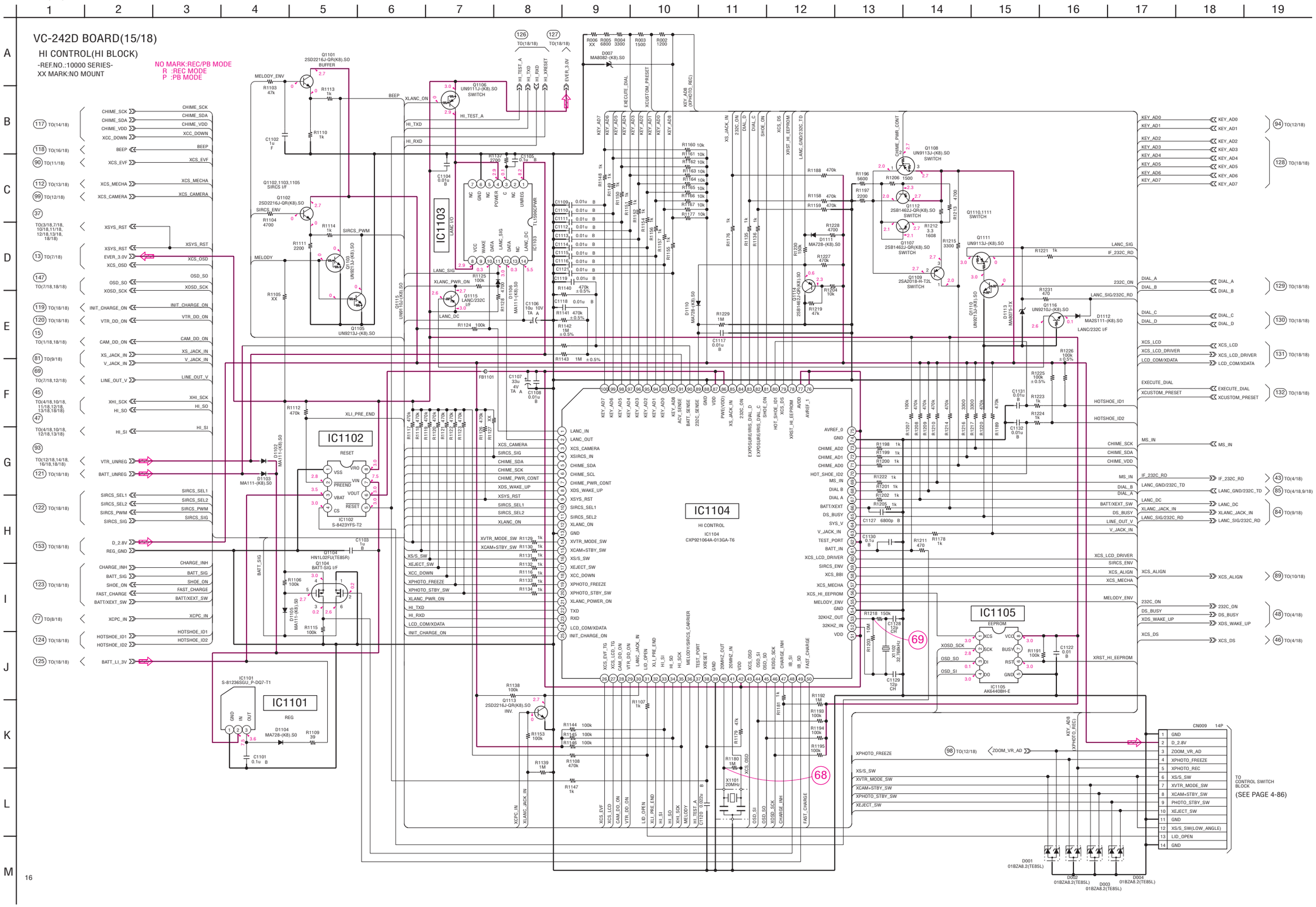

For Schematic Diagram

- Refer to page 4-51 for printed wiring board.
- Refer to page 4-115 for waveforms.

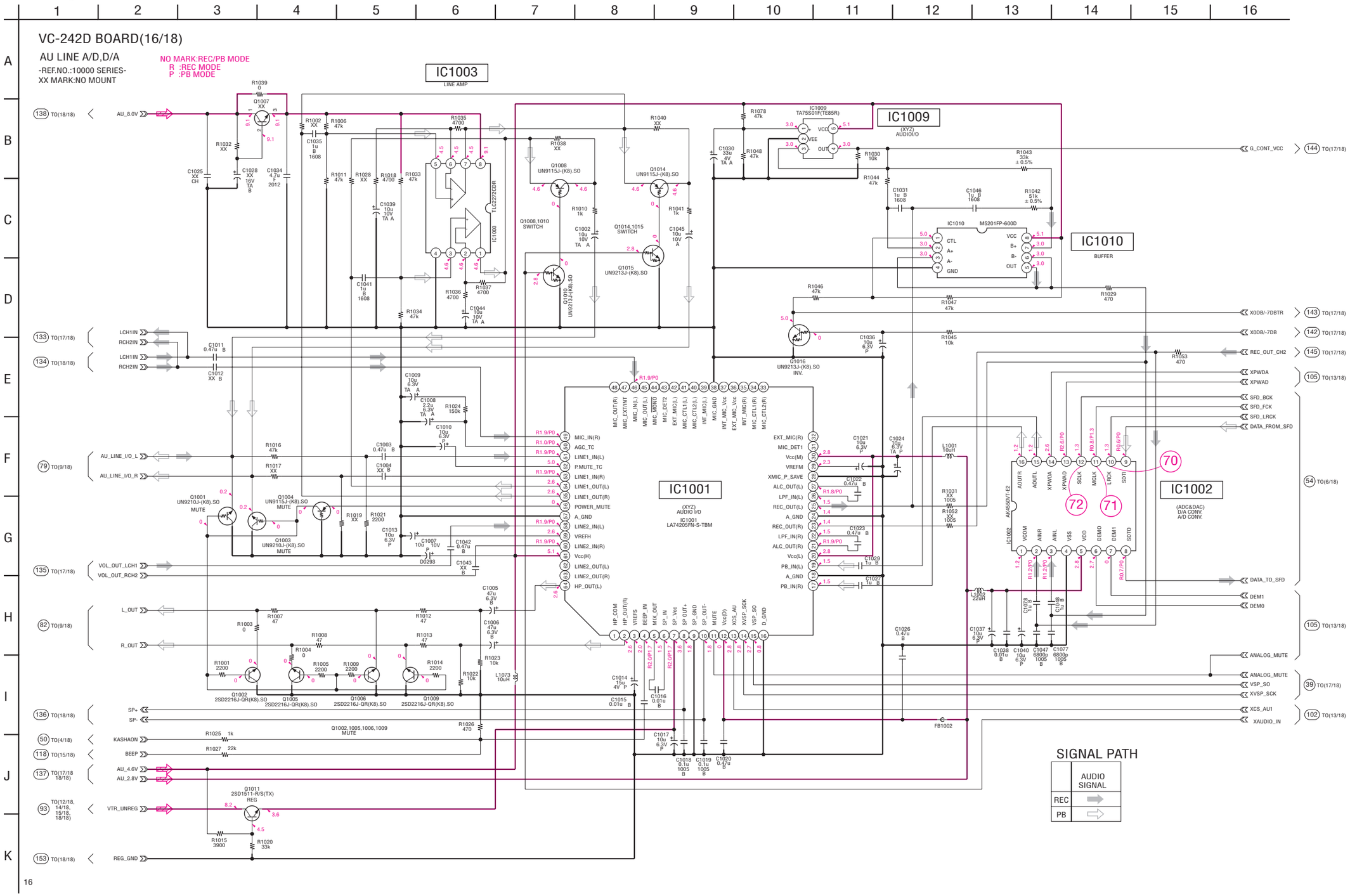

AU LINE A/D, D/A
VC-242D (16/18)

For Schematic Diagram

• Refer to page 4-51 for printed wiring board.

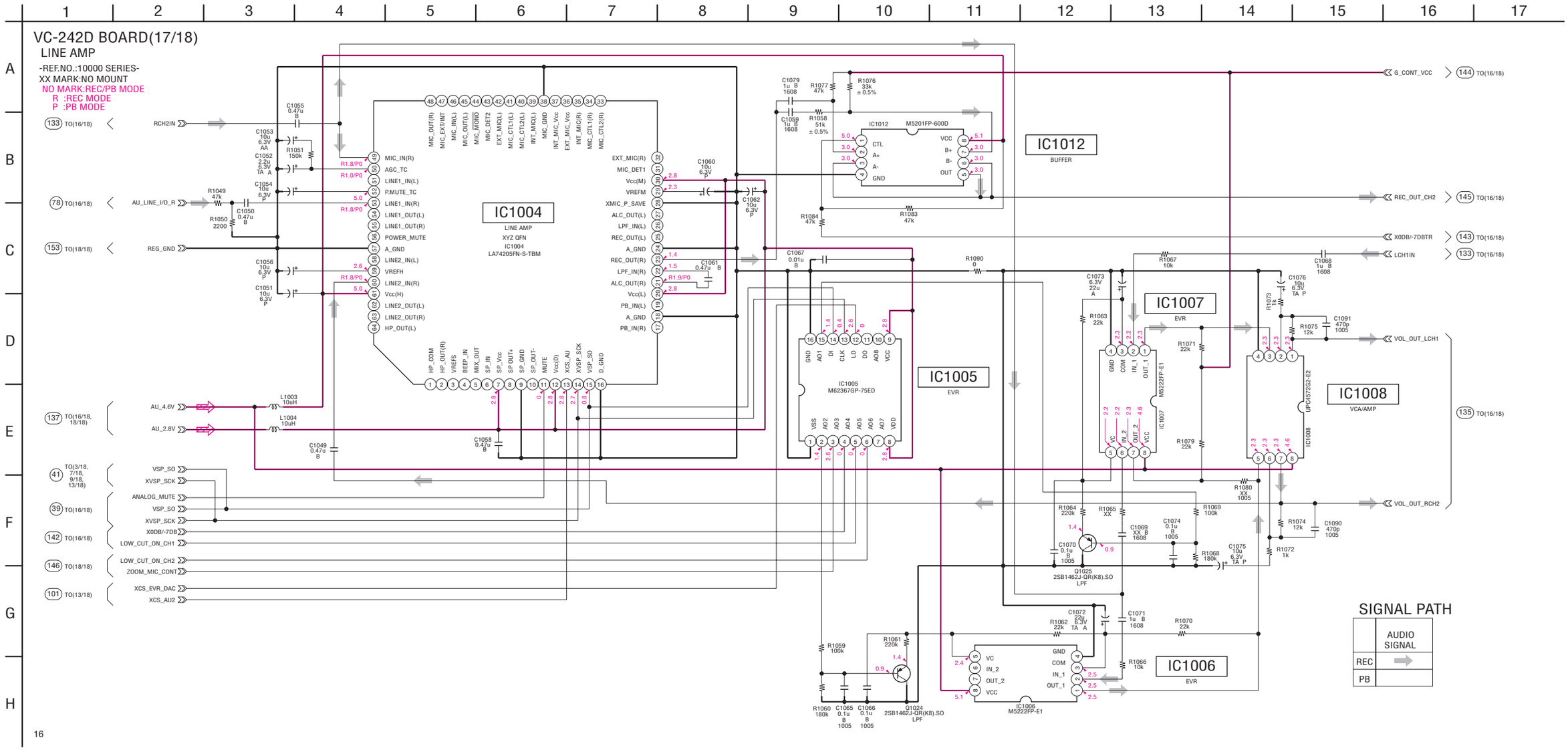

For Schematic Diagram

• Refer to page 4-51 for printed wiring board.

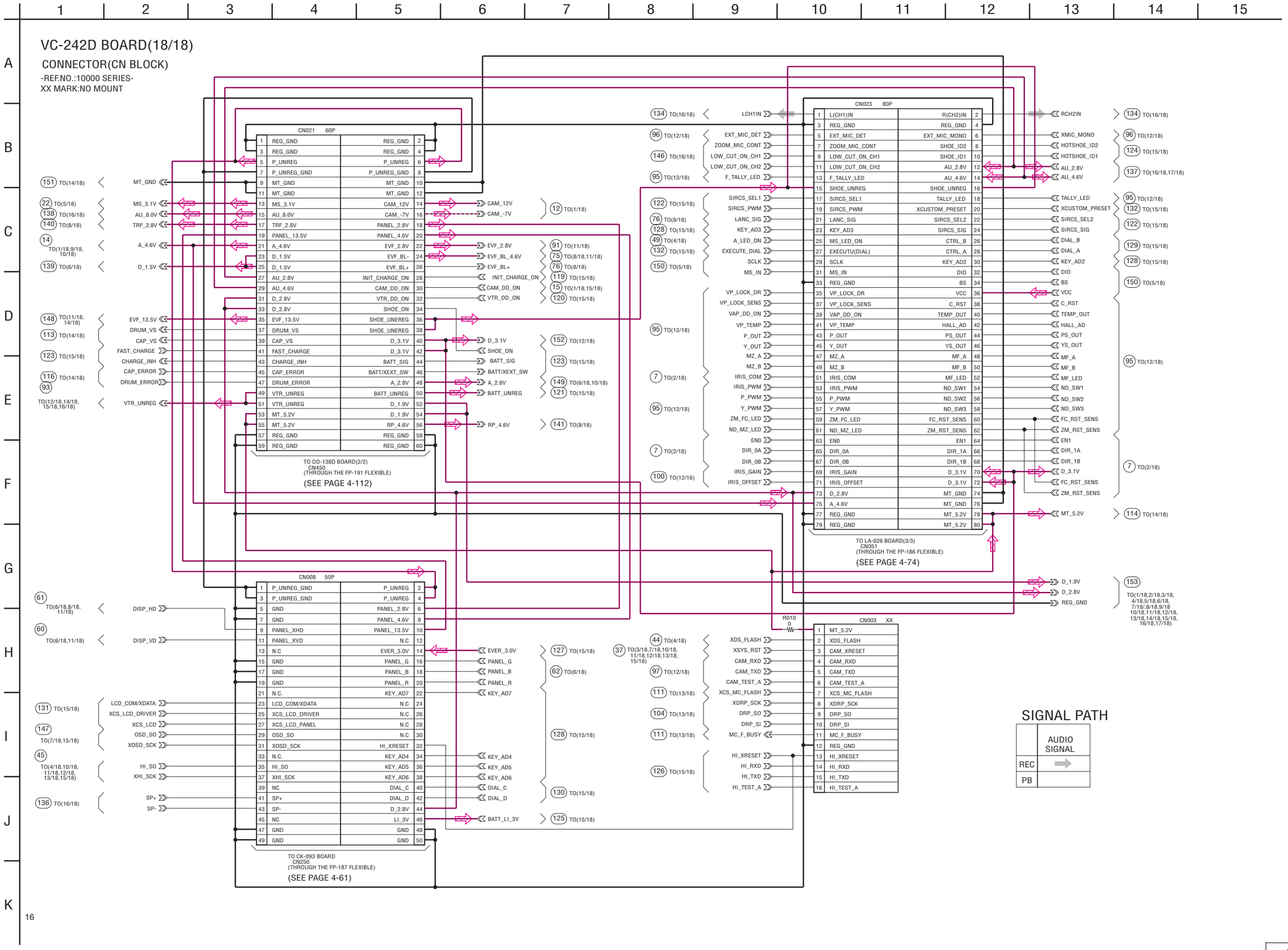

CONNECTION
VC-242D (18/18)

VC-242D (S/H AGC, TG, CAMERA SIGNAL PROCESS, MS I/F, RS232C I/F, STILL CONTROL, MS DRIVE, DV SIGNAL PROCESS, REC/PB AMP, LINE IN/OUT, LINE A/D, RGB DRIVE/TG, CAMERA CONTROL, MECHANISM CONTROL, DRUM/CAPSTAN MOTOR DRIVE, HI CONTROL, AU LINE A/D, D/A, LINE AMP) PRINTED WIRING BOARD

— Ref. No. VC-242D Board; 10,000 Series —

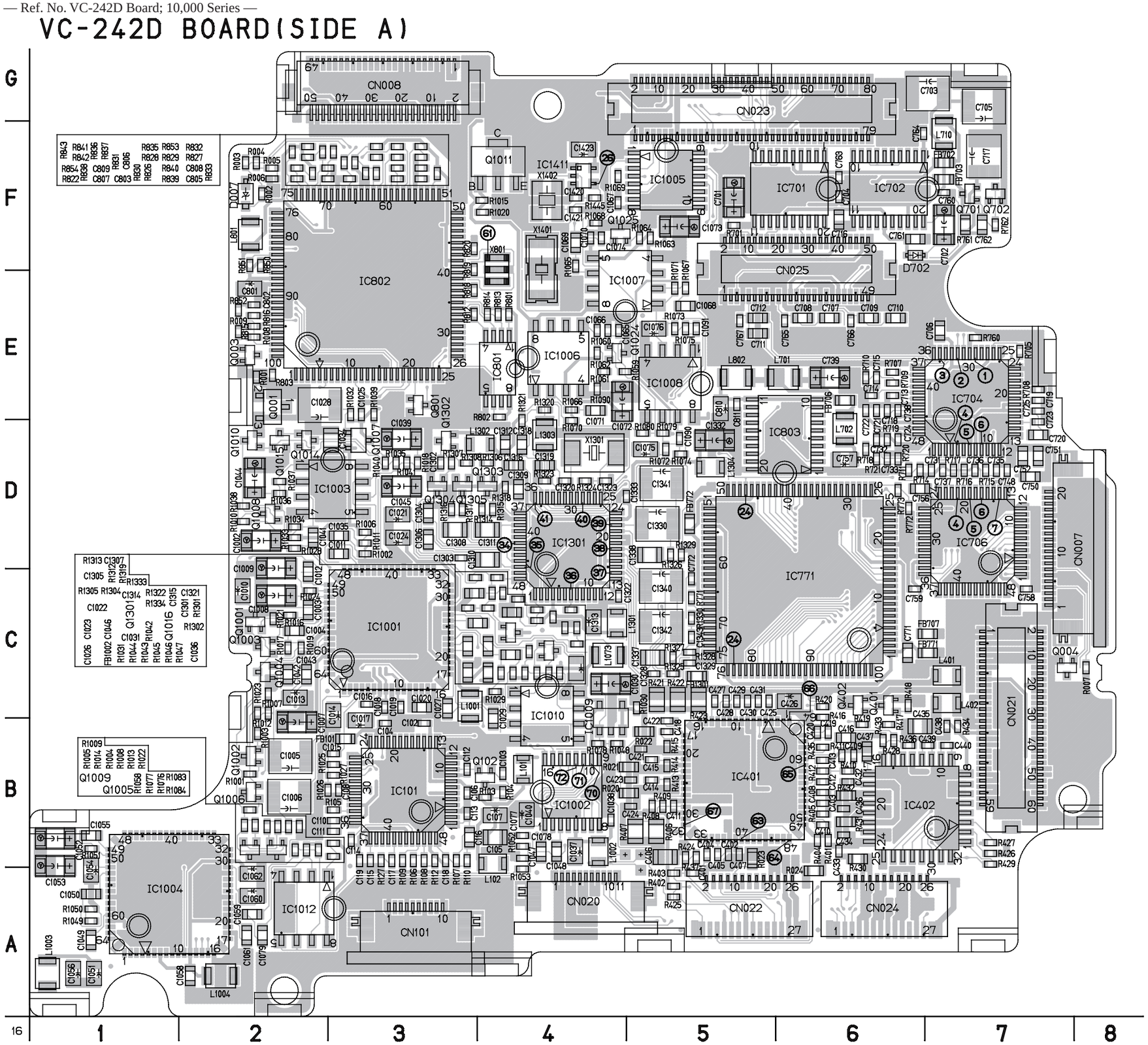

For printed wiring board

- Refer to page 4-118, 119 for parts location.
- This board is eight-layer print board. However, the patterns of layers two to seven have not been included in the diagram.
- Chip parts

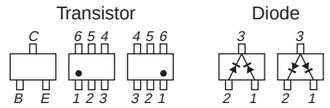

There are few cases that the part printed on this diagram isn't mounted in this model.

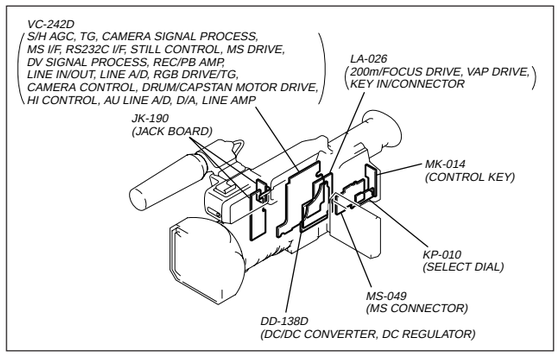

VC-242D BOARD(SIDE B)

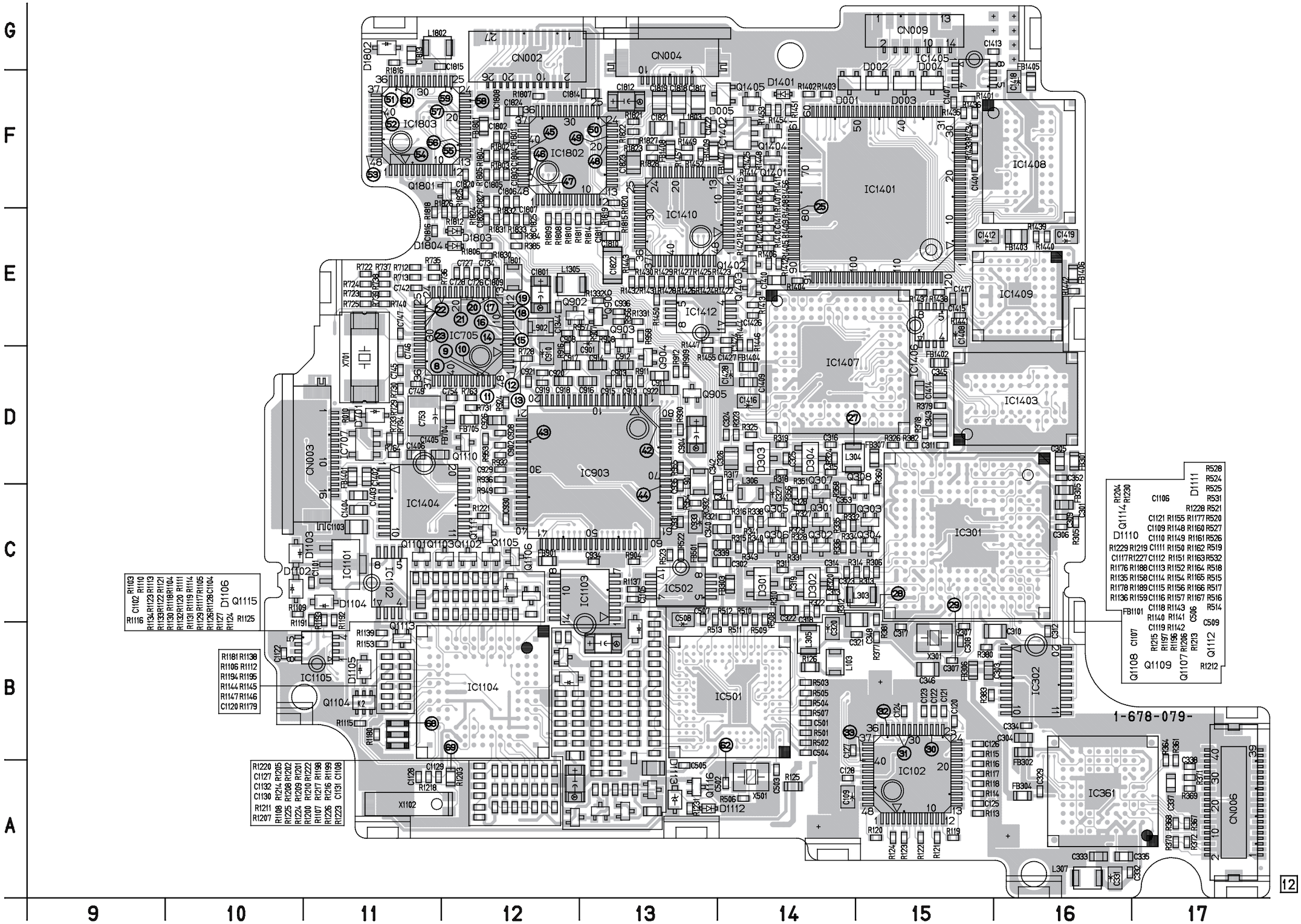

S/H AGC, TG, CAMERA SIGNAL PROCESS, MS I/F, RS232C, DV SIGNAL PROCESS, REC/PB AMP, LINE IN/OUT, RGB DRIVE, MECHANISM CONTROL, DRUM/CAPSTAN MOTOR DRIVE, HI CONTROL

VC-242D

JK-190 (JACK BOARD) PRINTED WIRING BOARD

— Ref. No. JK-190 Board; 2,000 Series —

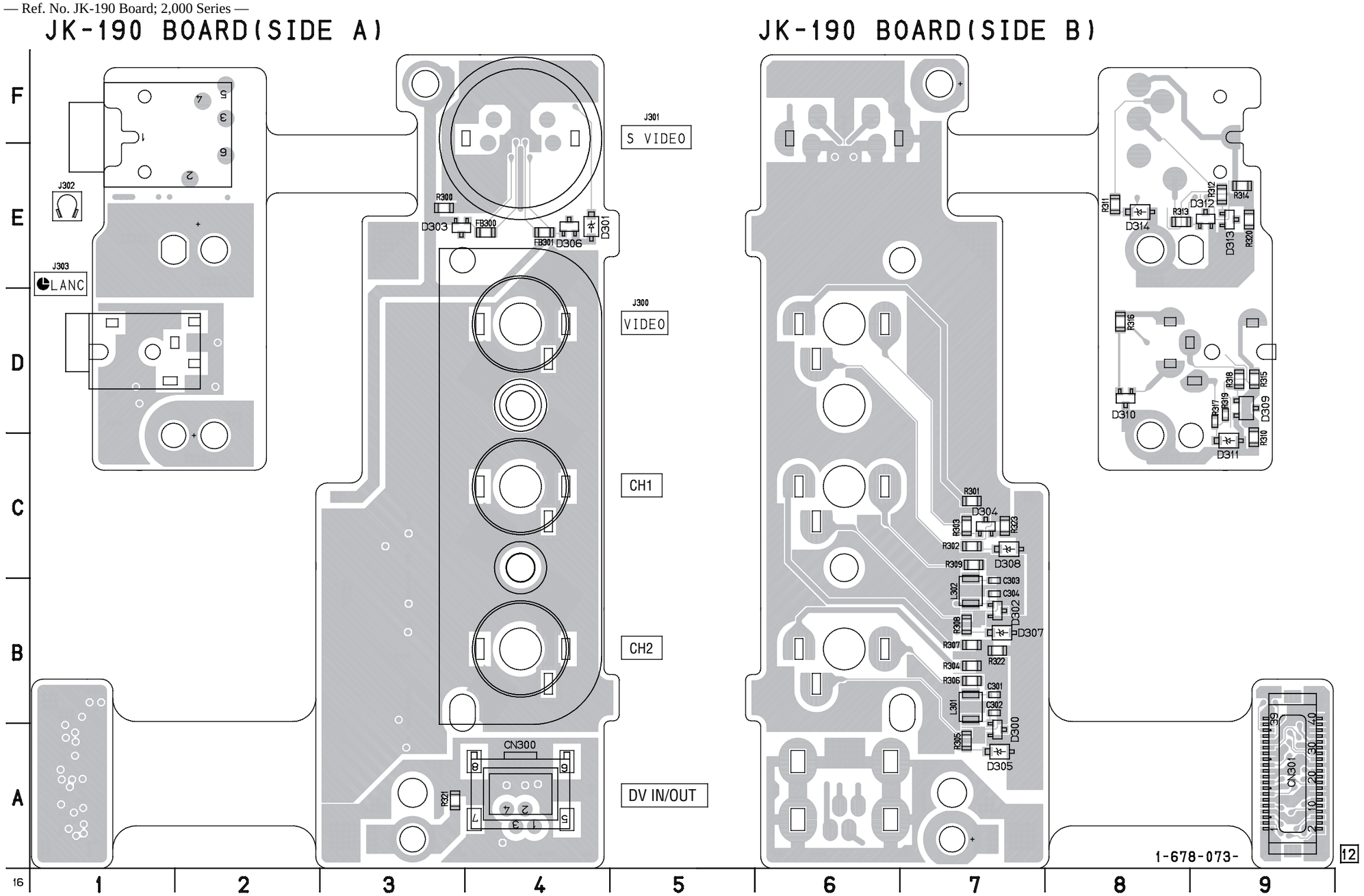

For printed wiring board

- Refer to page 4-120 for parts location.
- This board is four-layer print board. However, the patterns of layers two and three have not been included in the diagram.
- Chip parts

Diode

There are few cases that the part printed on this diagram isn't mounted in this model.

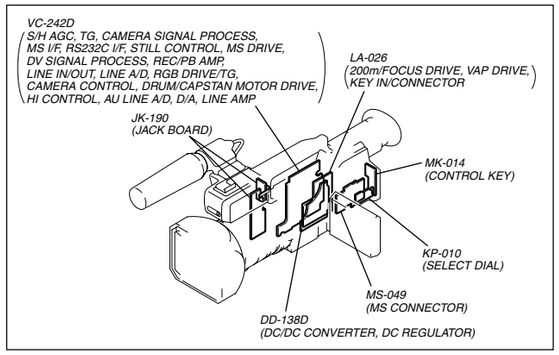

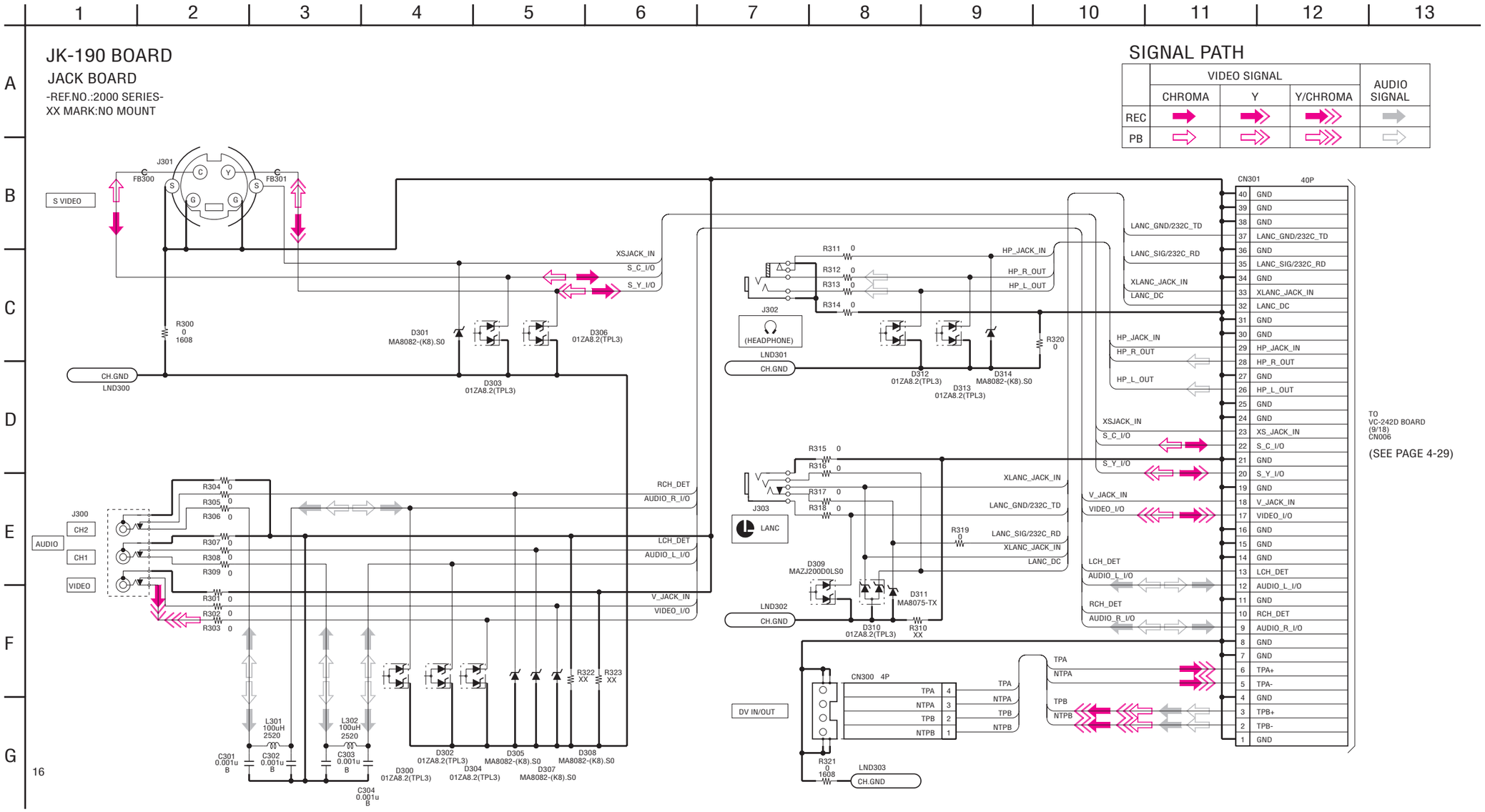
JK-190 BOARD
JACK BOARD
-REF.NO.:2000 SERIES-
XX MARK:NO MOUNT
SIGNAL PATH
VIDEO SIGNAL
CHROMA
Y
Y/CHROMA
AUDIO SIGNAL
REC
PB
S VIDEO
J301
FB300
FB301
XSJACK_IN
S_C_I/O
S_Y_I/O
R300 0 1608
D301 MA8082-(K8).S0
D306 01ZA8.2(TPL3)
D303 01ZA8.2(TPL3)
CH.GND
LND300
J302
(HEADPHONE)
LND301
HP_JACK_IN
HP_R_OUT
HP_L_OUT
D312 01ZA8.2(TPL3)
D313 01ZA8.2(TPL3)
D314 MA8082-(K8).S0
R320 0
J300
AUDIO
CH2
CH1
VIDEO
RCH_DET
AUDIO_R_I/O
LCH_DET
AUDIO_L_I/O
V_JACK_IN
VIDEO_I/O
J303
LANC
XLANC_JACK_IN
LANC_GND/232C_TD
LANC_SIG/232C_RD
LANC_DC
D309 MAZJ200D0LS0
D311 MA8075-TX
D310 01ZA8.2(TPL3)
R310 XX
LND302
L301 100uH 2520
L302 100uH 2520
C301 0.001u B
C302 0.001u B
C303 0.001u B
C304 0.001u B
D300 01ZA8.2(TPL3)
D302 01ZA8.2(TPL3)
D304 01ZA8.2(TPL3)
D305 MA8082-(K8).S0
D307 MA8082-(K8).S0
D308 MA8082-(K8).S0
R322 XX
R323 XX
DV IN/OUT
CN300 4P
TPA
NTPA
TPB
NTPB
R321 0 1608
LND303
CN301 40P
TO VC-242D BOARD (9/18) CN006
(SEE PAGE 4-29)
GND
TPA+
TPA-
TPB+
TPB-

CK-093 (KEY IN) PRINTED WIRING BOARD

— Ref. No. CK-093 Board; 1,000 Series —

CK-093 BOARD(SIDE A)

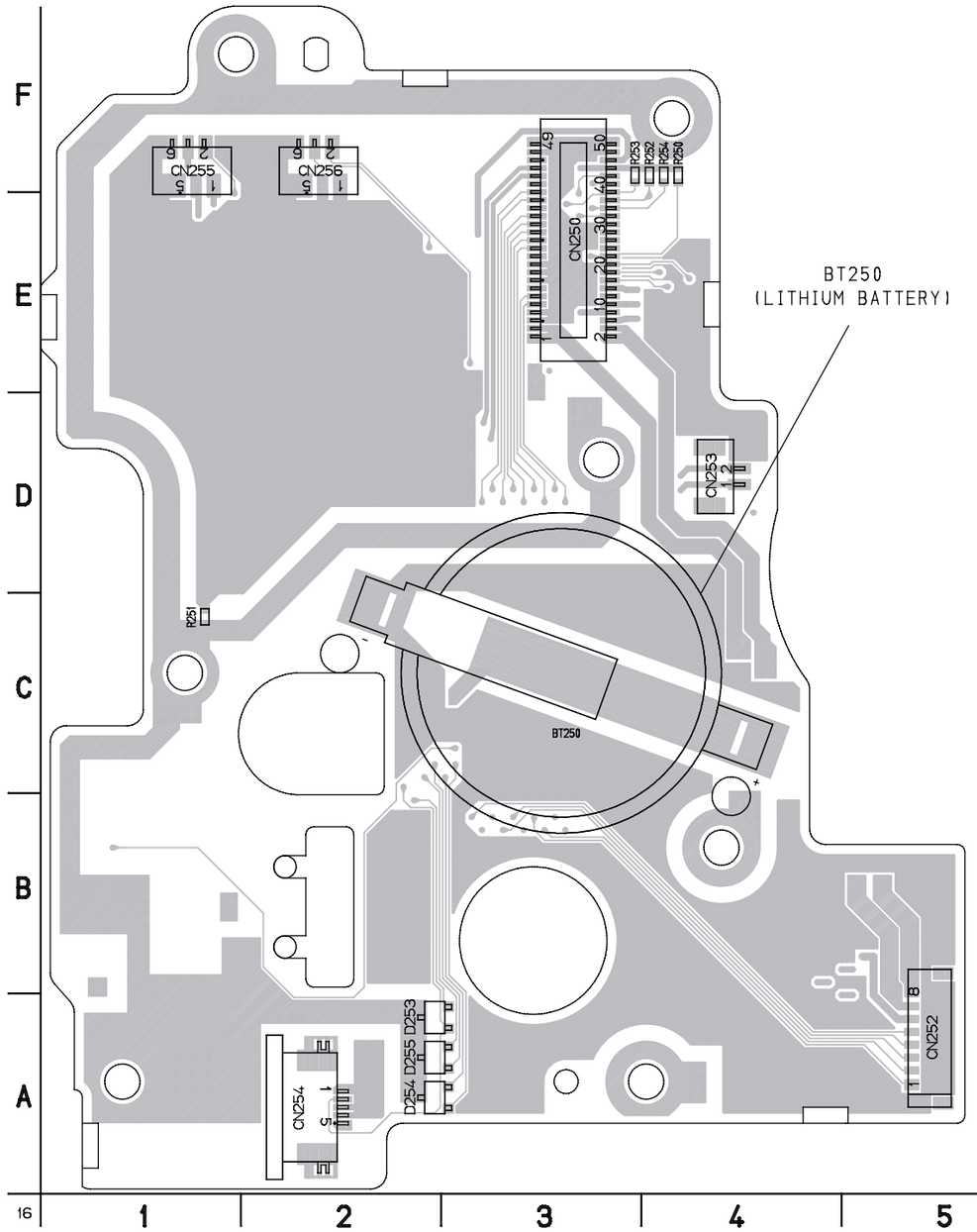

CK-093 BOARD(SIDE B)

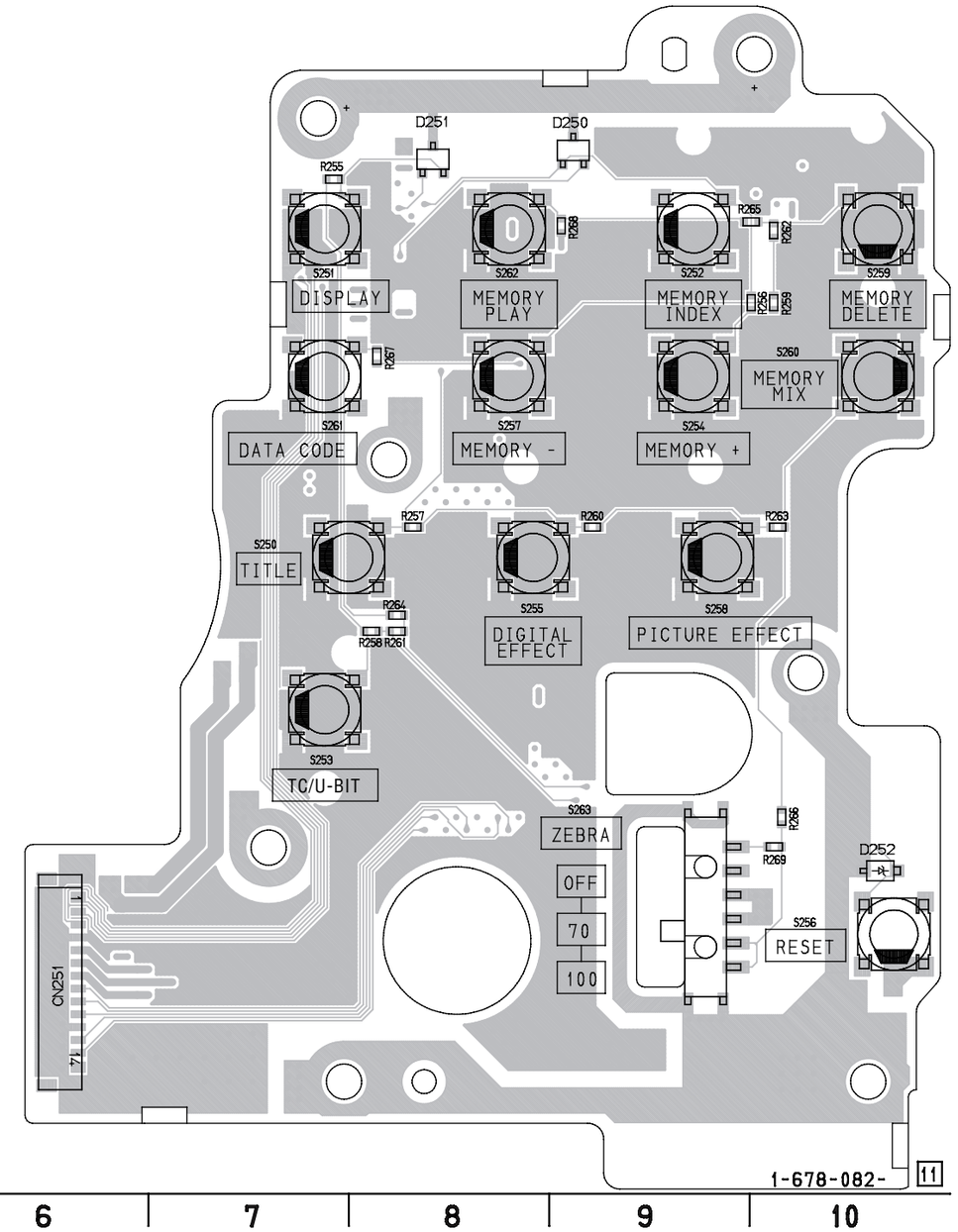

For printed wiring board

- Refer to page 4-120 for parts location.
- This board is six-layer print board. However, the patterns of layers two to five have not been included in the diagram.
- Chip parts

Diode

There are few cases that the part printed on this diagram isn't mounted in this model.

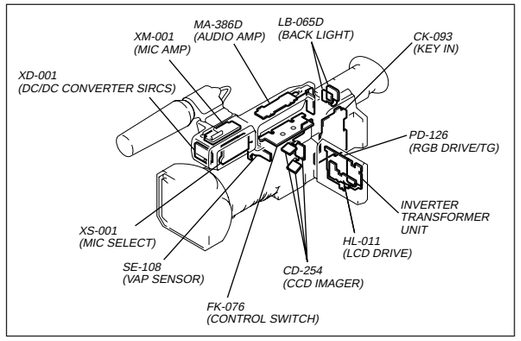

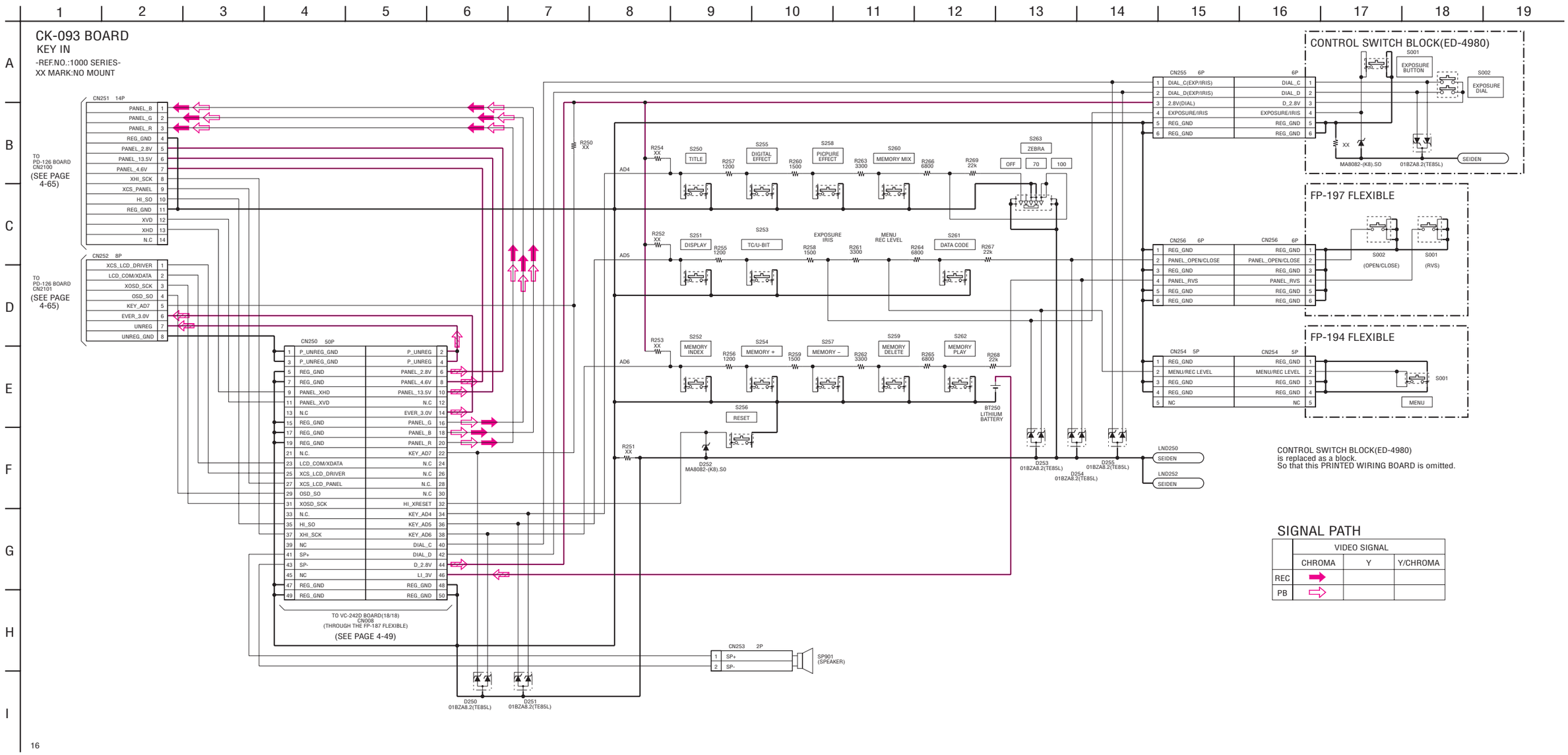
CK-093 BOARD
KEY IN
-REF.NO.:1000 SERIES-
XX MARK:NO MOUNT
CN251 14P
PANEL_B
PANEL_G
PANEL_R
REG_GND
PANEL_2.8V
PANEL_13.5V
PANEL_4.6V
XHI_SCK
XCS_PANEL
HI_SO
REG_GND
XVD
XHD
N.C
TO PD-126 BOARD CN2100 (SEE PAGE 4-65)
CN252 8P
XCS_LCD_DRIVER
LCD_COM/XDATA
XOSD_SCK
OSD_SO
KEY_AD7
EVER_3.0V
UNREG
UNREG_GND
TO PD-126 BOARD CN2101 (SEE PAGE 4-65)
CN250 50P
TO VC-242D BOARD(18/18) CN008 (THROUGH THE FP-187 FLEXIBLE)
(SEE PAGE 4-49)
R250 XX
AD4
AD5
AD6
R254 XX
S250 TITLE
R257 1200
S255 DIGITAL EFFECT
R260 1500
S258 PICPURE EFFECT
R263 3300
S260 MEMORY MIX
R266 6800
R269 22k
S263 ZEBRA
OFF
70
100
R252 XX
S251 DISPLAY
R255 1200
S253 TC/U-BIT
R258 1500
EXPOSURE IRIS
R261 3300
MENU REC LEVEL
R264 6800
S261 DATA CODE
R267 22k
R253 XX
S252 MEMORY INDEX
R256 1200
S254 MEMORY +
R259 1500
S257 MEMORY –
R262 3300
S259 MEMORY DELETE
R265 6800
S262 MEMORY PLAY
R268 22k
S256 RESET
BT250 LITHIUM BATTERY
R251 XX
D252 MA8082-(K8).S0
D253 01BZA8.2(TE85L)
D254 01BZA8.2(TE85L)
D255 01BZA8.2(TE85L)
LND250 SEIDEN
LND252 SEIDEN
CN253 2P
SP+
SP-
SP901 (SPEAKER)
D250 01BZA8.2(TE85L)
D251 01BZA8.2(TE85L)
CN255 6P
DIAL_C(EXP/IRIS)
DIAL_D(EXP/IRIS)
2.8V(DIAL)
EXPOSURE/IRIS
REG_GND
DIAL_C
DIAL_D
D_2.8V
CONTROL SWITCH BLOCK(ED-4980)
S001 EXPOSURE BUTTON
S002 EXPOSURE DIAL
XX
MA8082-(K8).S0
01BZA8.2(TE85L)
SEIDEN
FP-197 FLEXIBLE
CN256 6P
REG_GND
PANEL_OPEN/CLOSE
PANEL_RVS
S002 (OPEN/CLOSE)
S001 (RVS)
FP-194 FLEXIBLE
CN254 5P
MENU/REC LEVEL
NC
S001
MENU
CONTROL SWITCH BLOCK(ED-4980) is replaced as a block. So that this PRINTED WIRING BOARD is omitted.
SIGNAL PATH
VIDEO SIGNAL
CHROMA
Y
Y/CHROMA
REC
PB
16

PD-126 (RGB DRIVE/TG) PRINTED WIRING BOARD

— Ref. No. PD-126 Board; 20,000 Series —

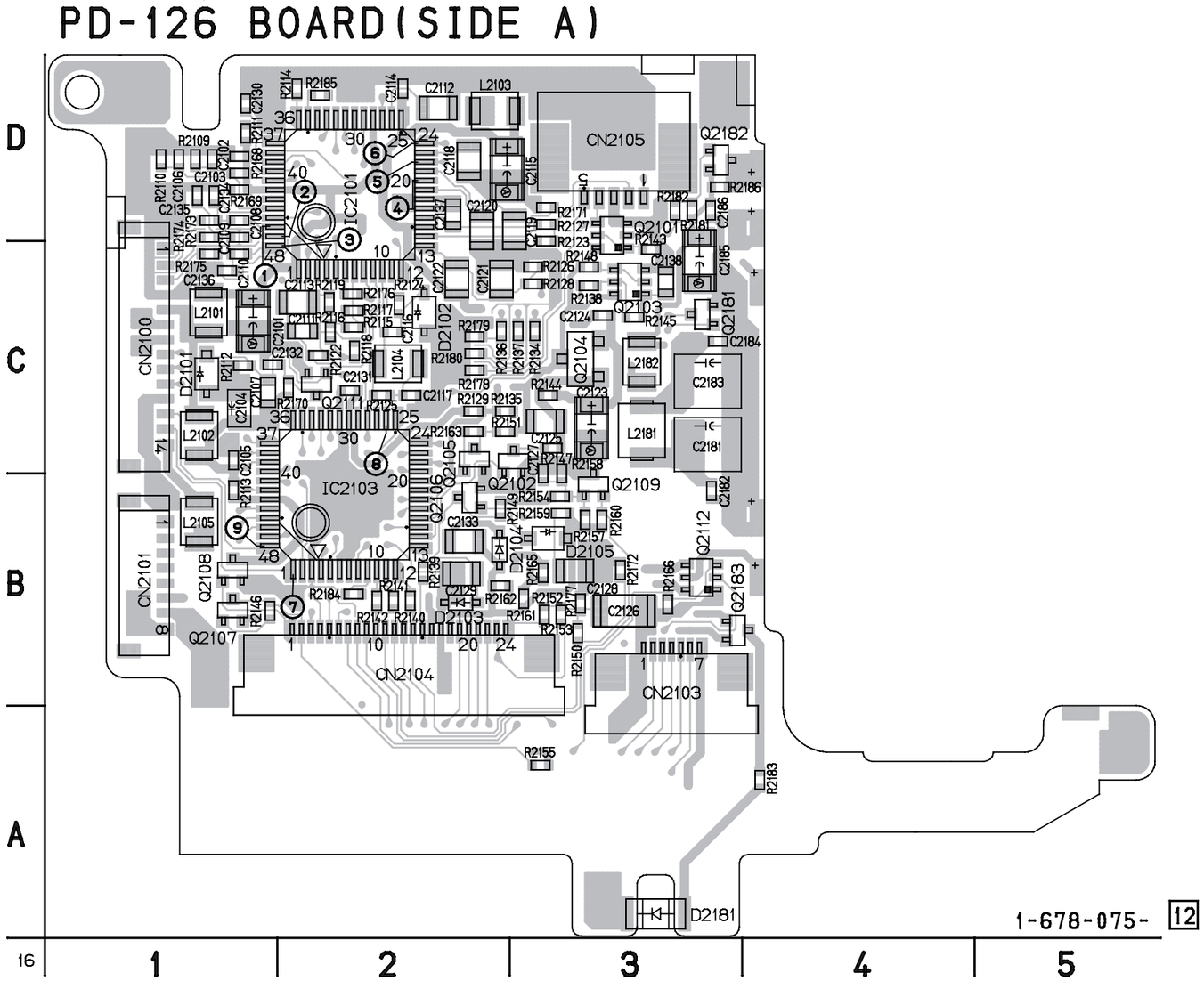

FP-194 FLEXIBLE BOARD

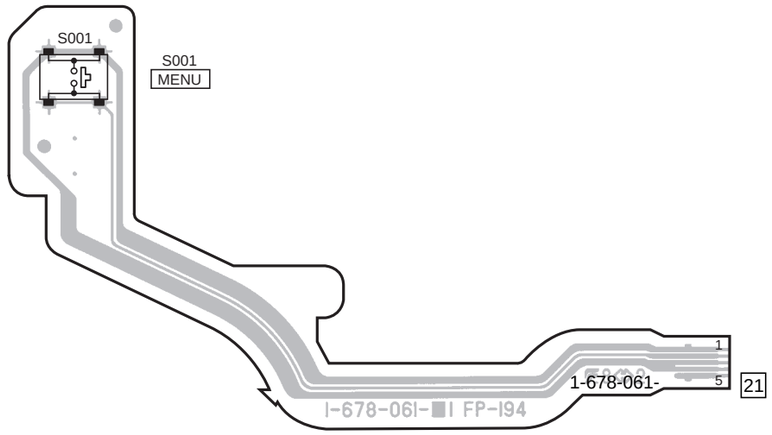

FP-197 FLEXIBLE BOARD

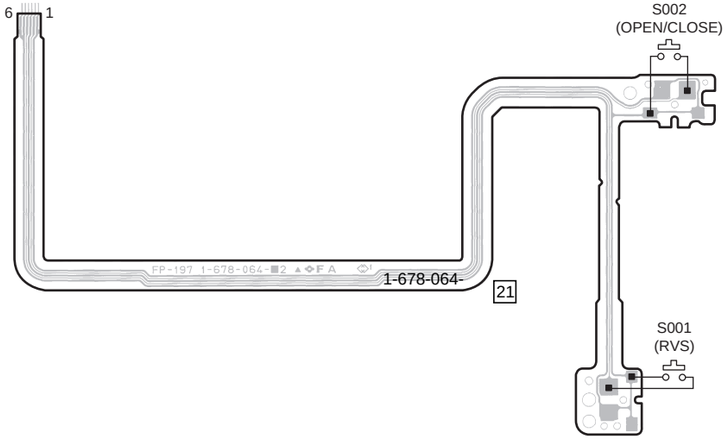

For printed wiring board

- Refer to page 4-120 for parts location.
- This board is four-layer print board. However, the patterns of layers two to four have not been included in the diagram.
- Chip parts

Transistor

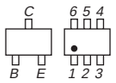

There are few cases that the part printed on this diagram isn't mounted in this model.

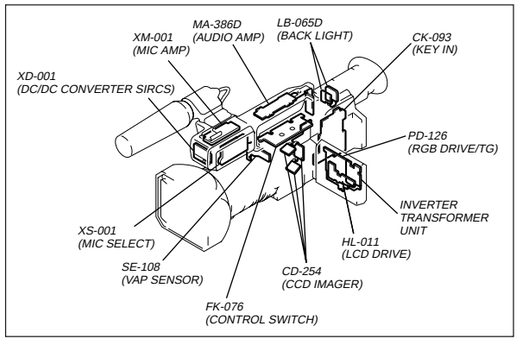

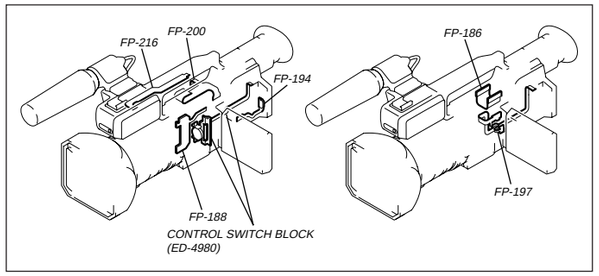

For Schematic Diagram

• Refer to page 4-116 for waveforms.

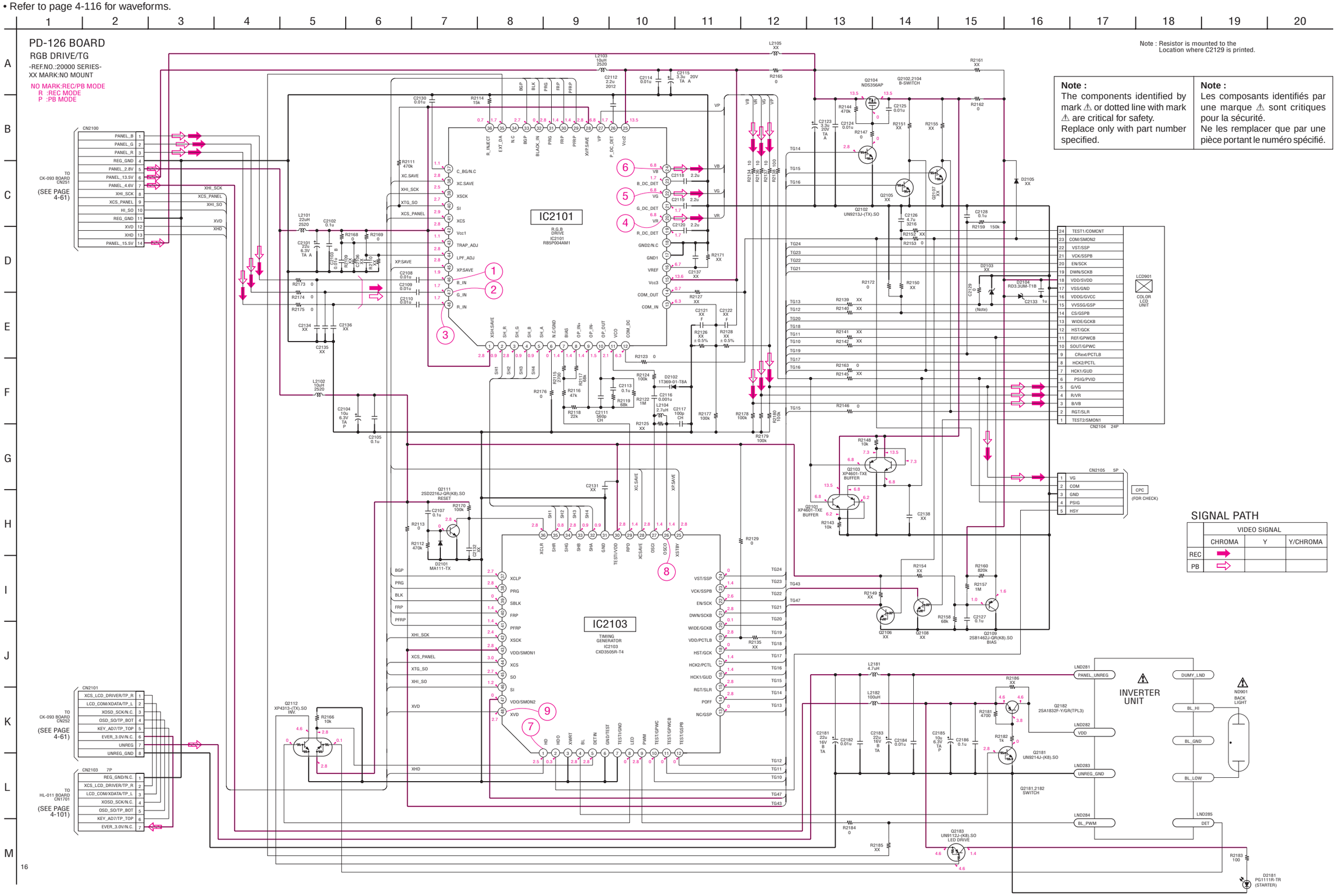

RGB DRIVE/TG
PD-126

LA-026 (ZOOM/FOCUS DRIVE, VAP DRIVE, KEY IN/CONNECTOR) PRINTED WIRING BOARD

— Ref. No. LA-026 Board; 20,000 Series —

LA-026 BOARD(SIDE A)

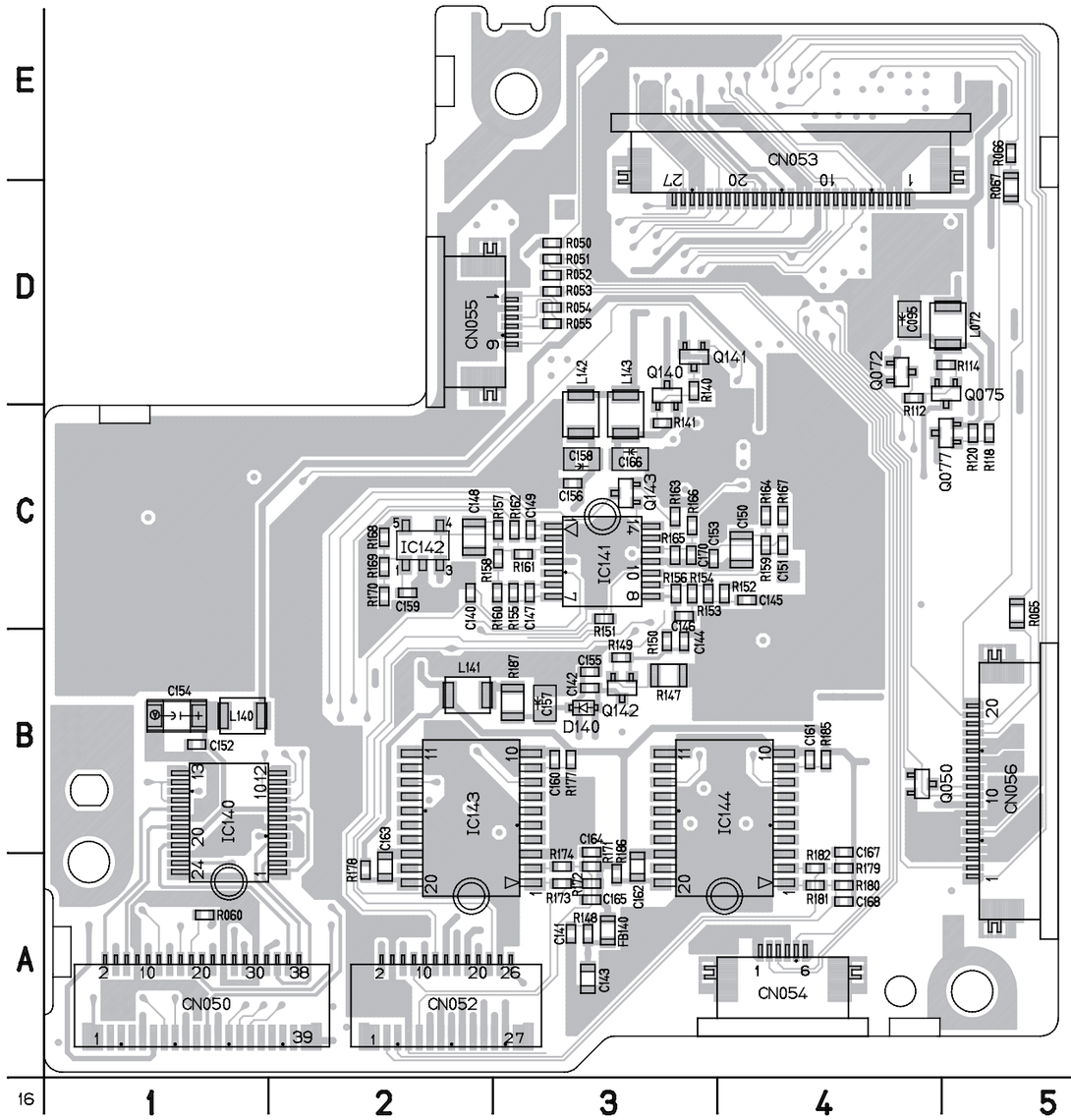

LA-026 BOARD(SIDE B)

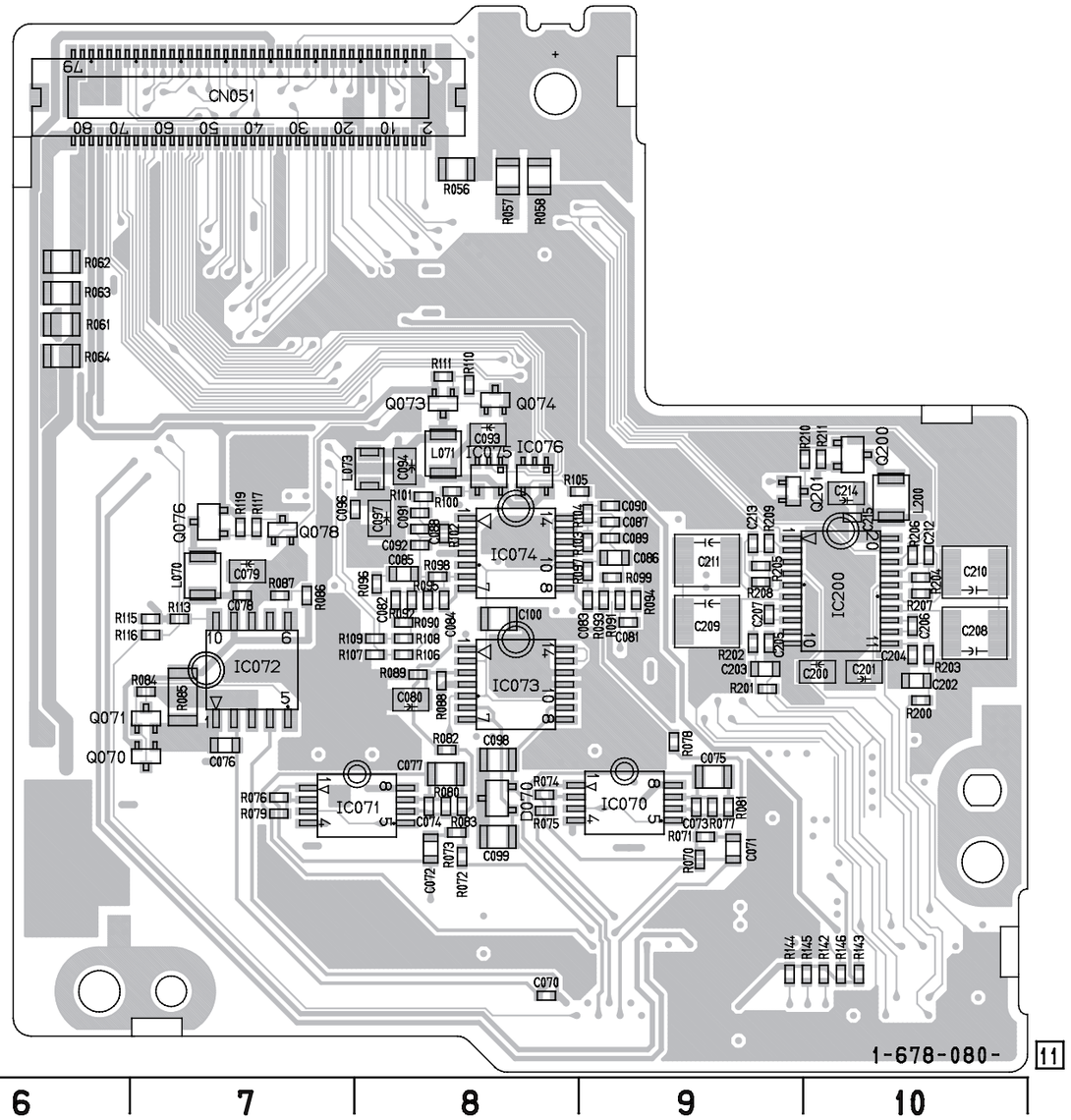

For printed wiring board

- Refer to page 4-121 for parts location.
- This board is six-layer print board. However, the patterns of layers two to five have not been included in the diagram.
- Chip parts

Transistor

Diode

There are few cases that the part printed on this diagram isn't mounted in this model.

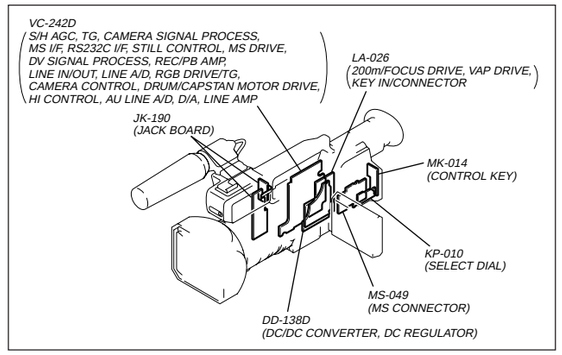

For Schematic Diagram

• Refer to page 4-75 for SE-108 printed wiring board.

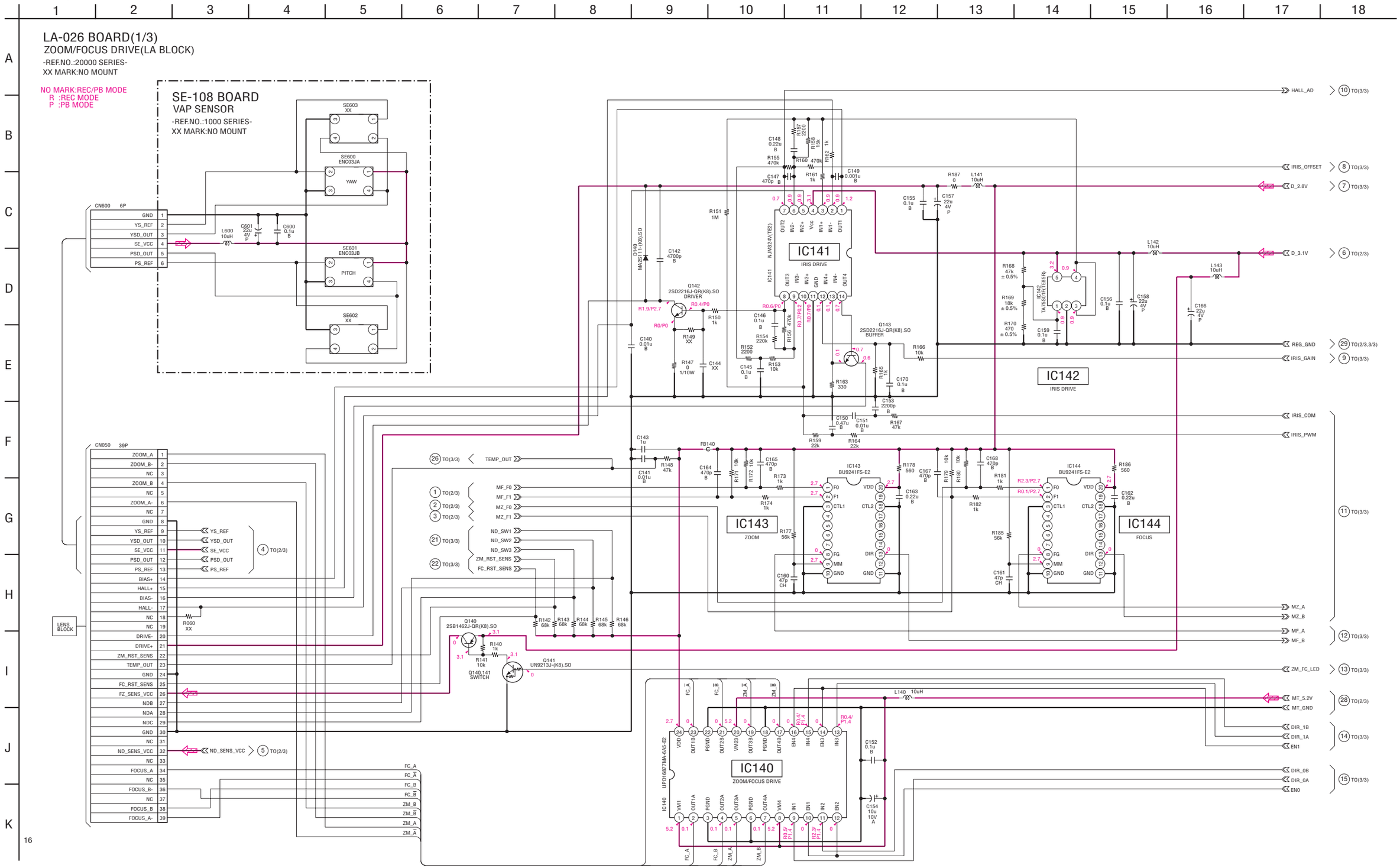

ZOOM/FOCUS DRIVE
LA-026 (1/3)

For Schematic Diagram

• Refer to page 4-67 for printed wiring board.

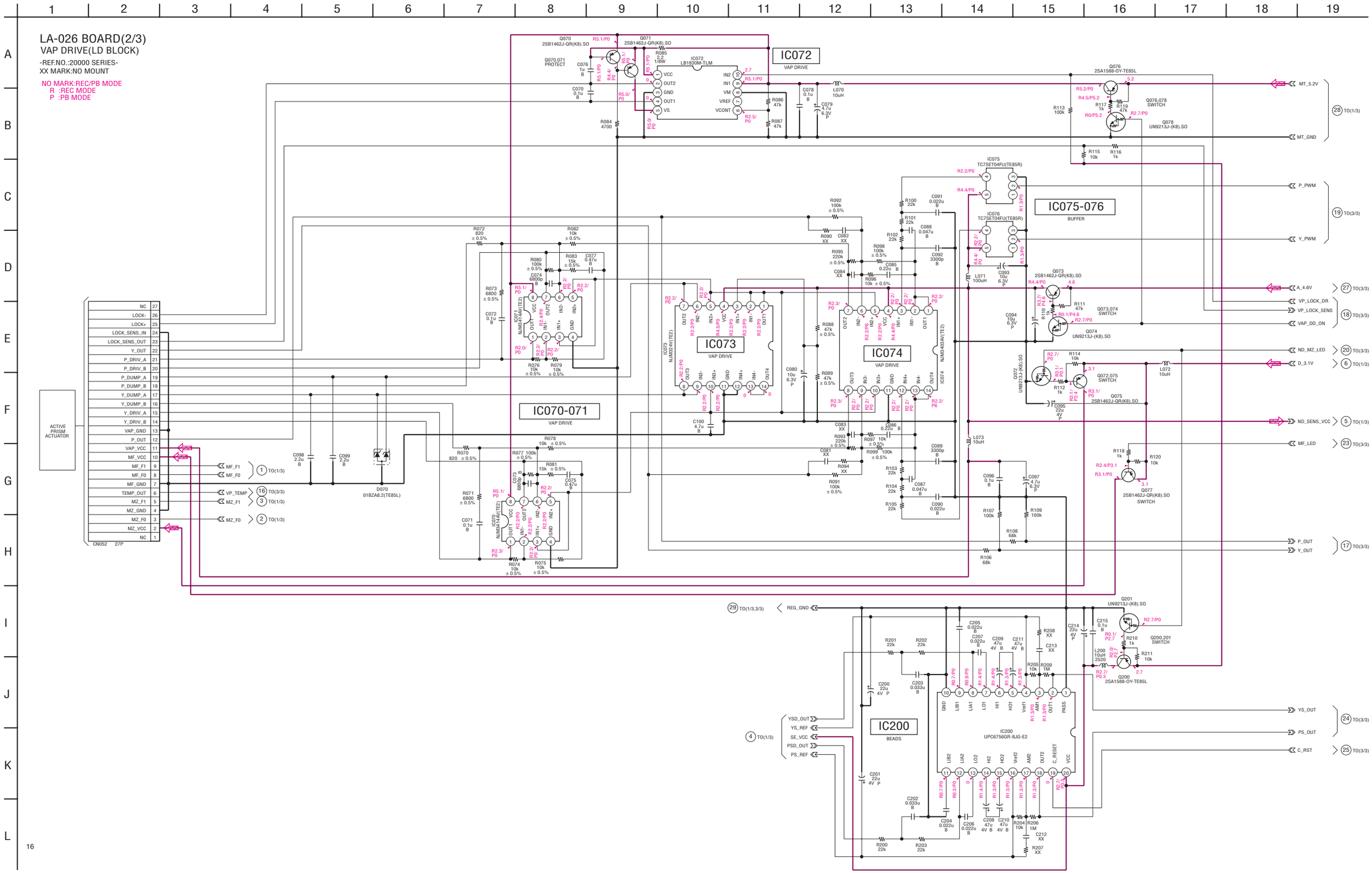

VAP DRIVE
LA-026 (2/3)

For Schematic Diagram

• Refer to page 4-67 for printed wiring board.

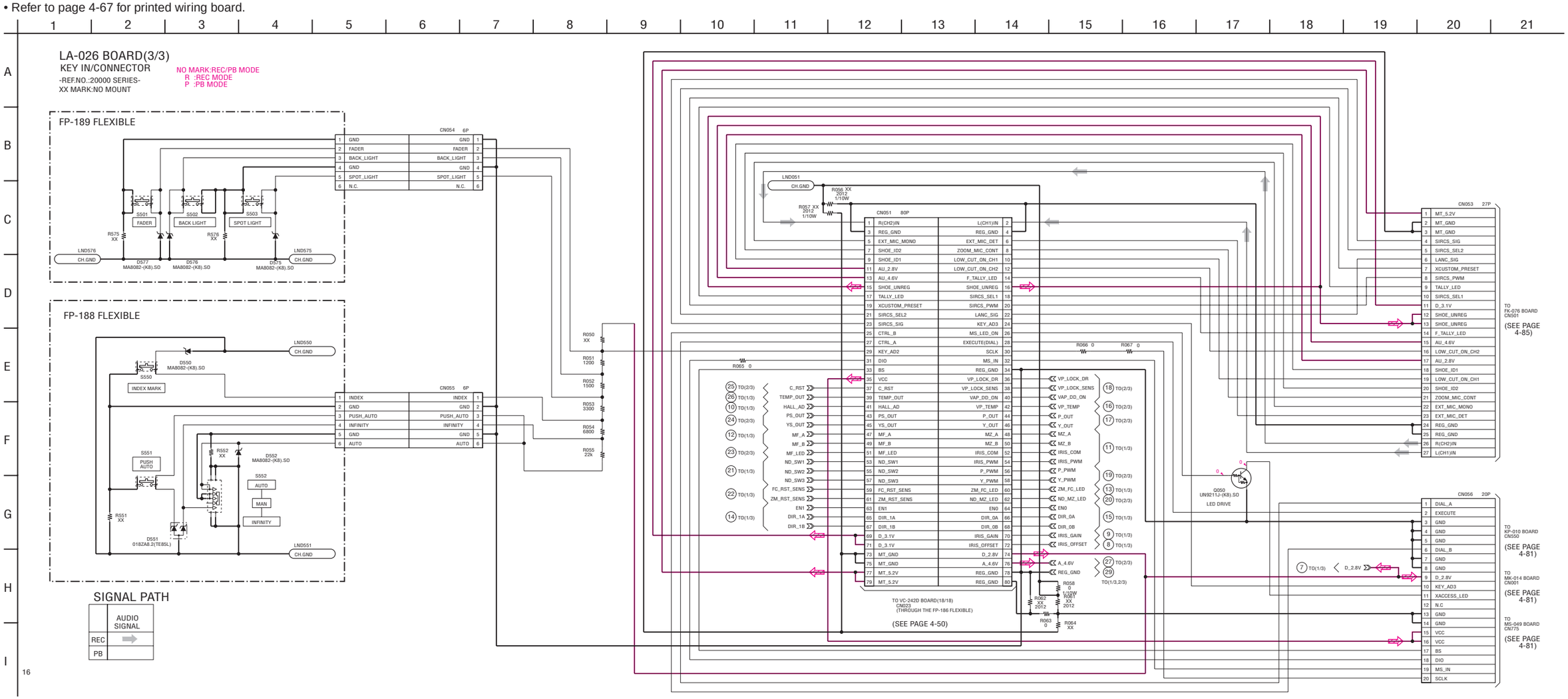

KEY IN/CONNECTOR

LA-026 (3/3)

SE-108 (VAP SENSOR) PRINTED WIRING BOARD

— Ref. No. SE-108 Board; 1,000 Series —

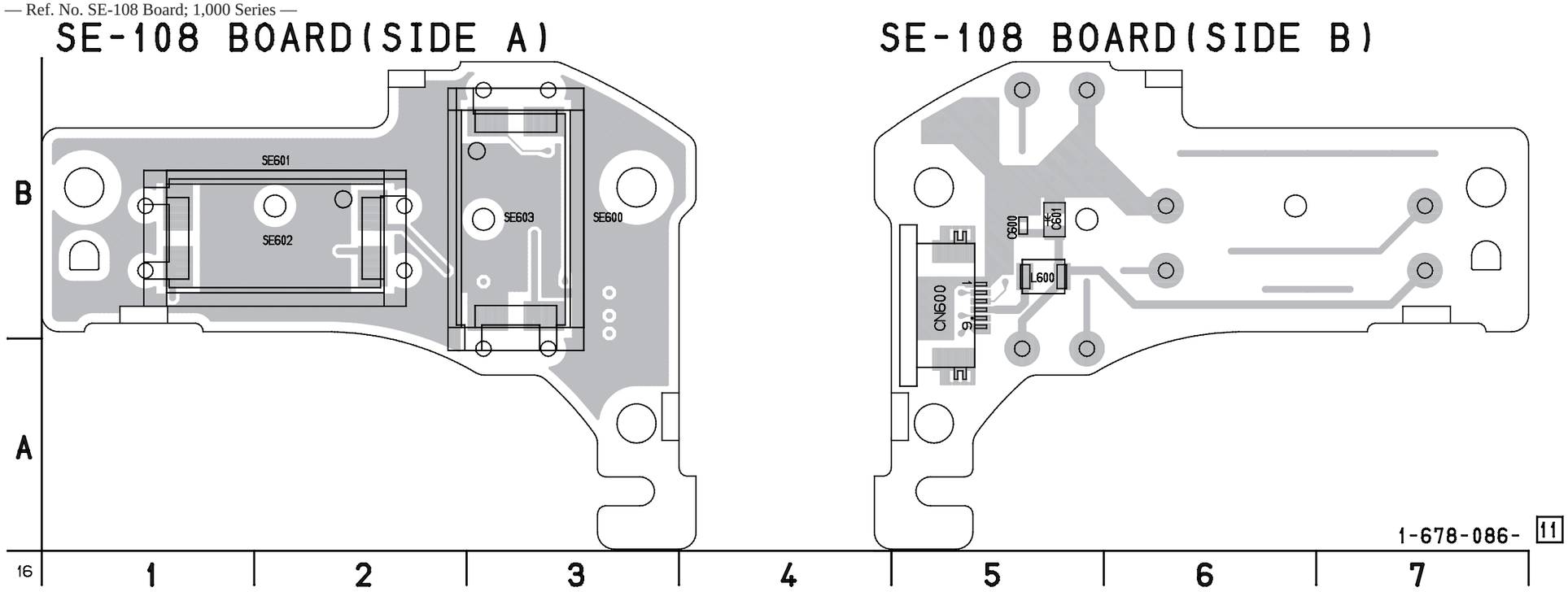

For printed wiring board

- Refer to page 4-121 for parts location.
- This board is six-layer print board. However, the patterns of layers two to five have not been included in the diagram.

There are few cases that the part printed on this diagram isn't mounted in this model.

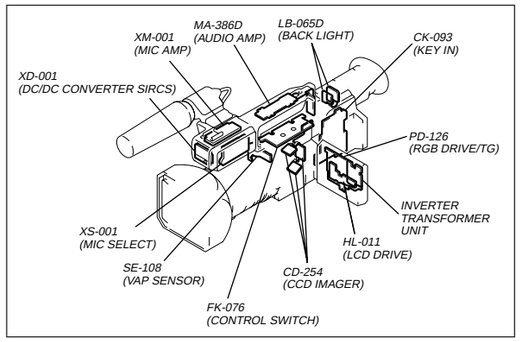

FP-188 FLEXIBLE BOARD

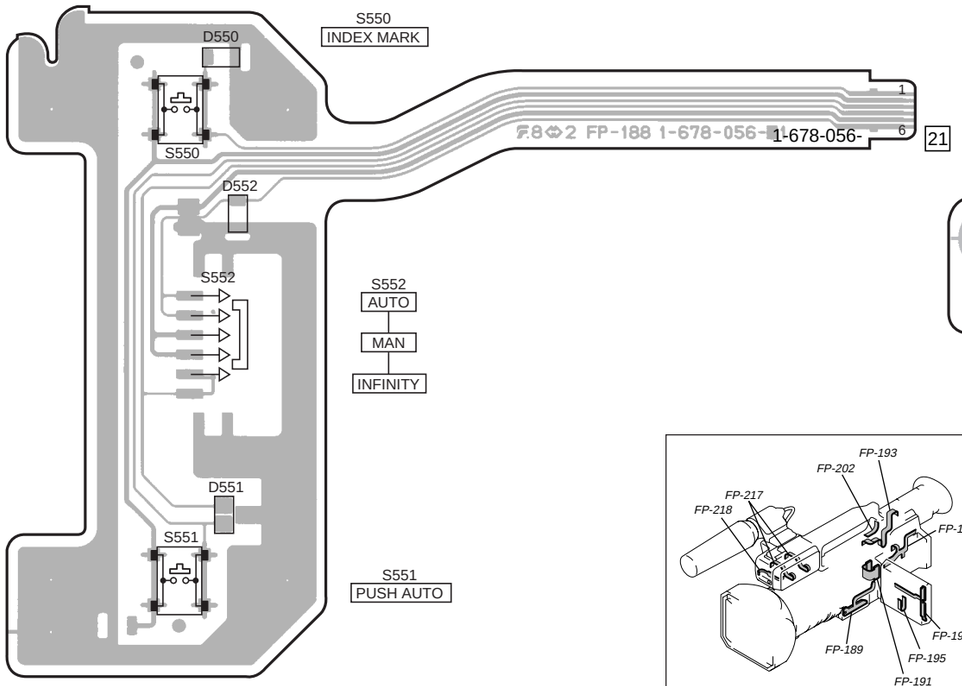

FP-189 FLEXIBLE BOARD

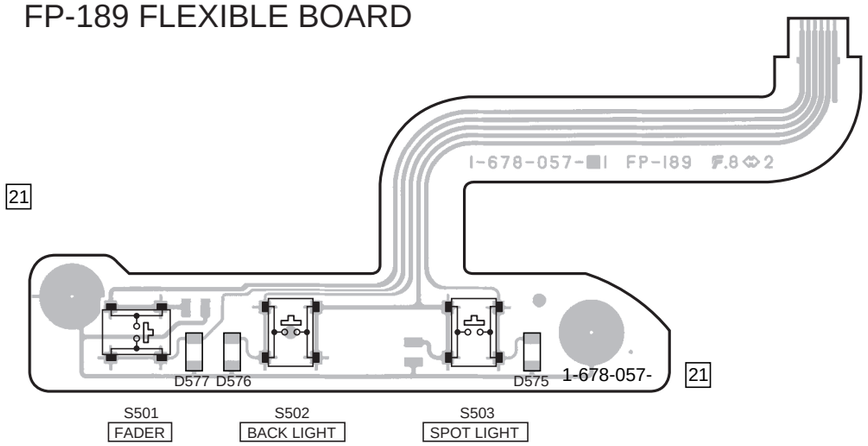

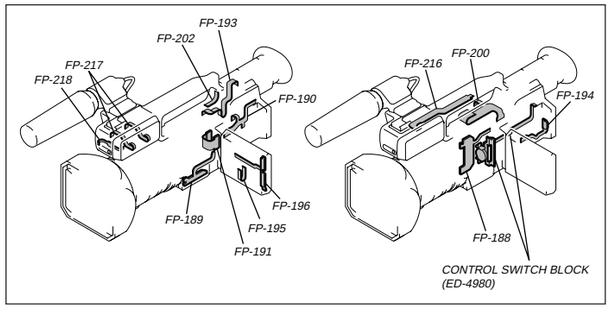

MS-049 (MS CONNECTOR) PRINTED WIRING BOARD

— Ref. No. MS-049 Board; 20,000 Series —

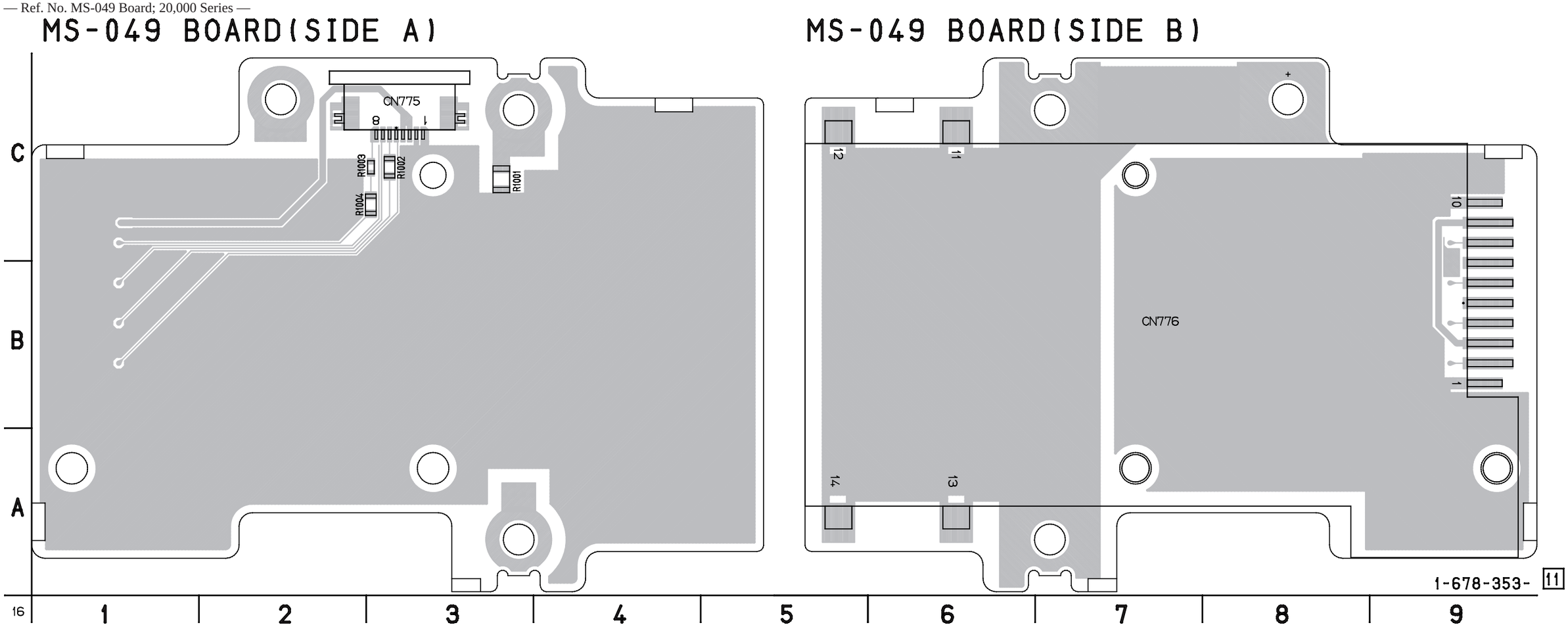

For printed wiring board

- Refer to page 4-121 for parts location.
- This board is four-layer print board. However, the patterns of layers two and three have not been included in the diagram.

There are few cases that the part printed on this diagram isn't mounted in this model.

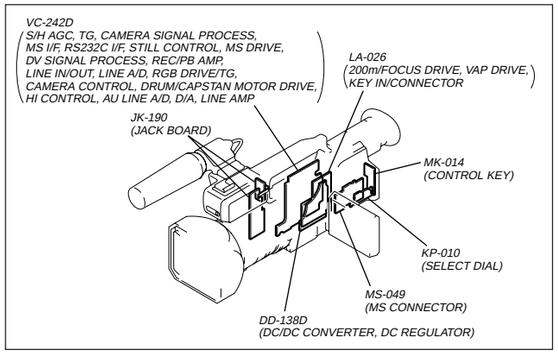

KP-010 (SELECT DIAL), MK-014 (CONTROL KEY) PRINTED WIRING BOARDS

— Ref. No. KP-010, MK-014 Boards; 10,000 Series —

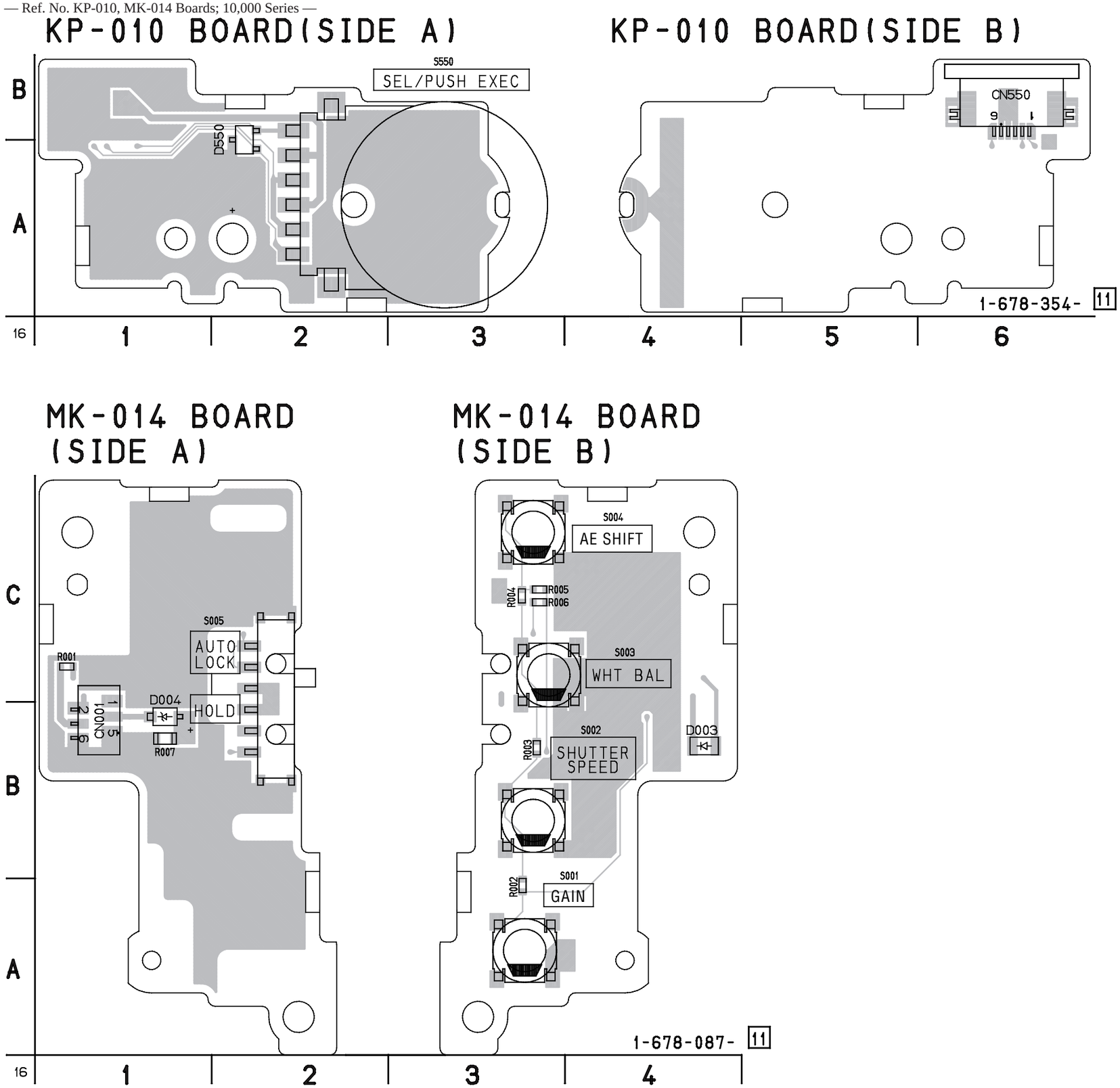

For printed wiring boards

- Refer to page 4-121 for parts location.
- These boards are six-layer print board. However, the patterns of layers two to five have not been included in the diagrams.
- Chip parts

Diode

There are few cases that the part printed on this diagram isn't mounted in this model.

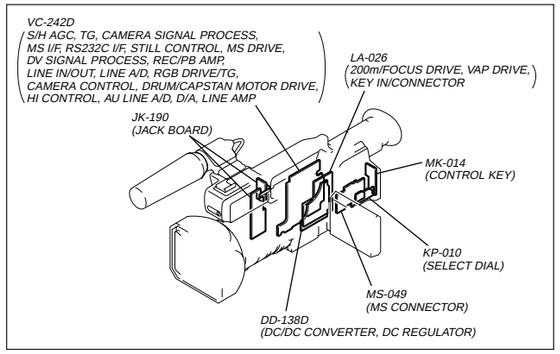

For Schematic Diagram

• Refer to page 4-77 for MS-049 printed wiring board.

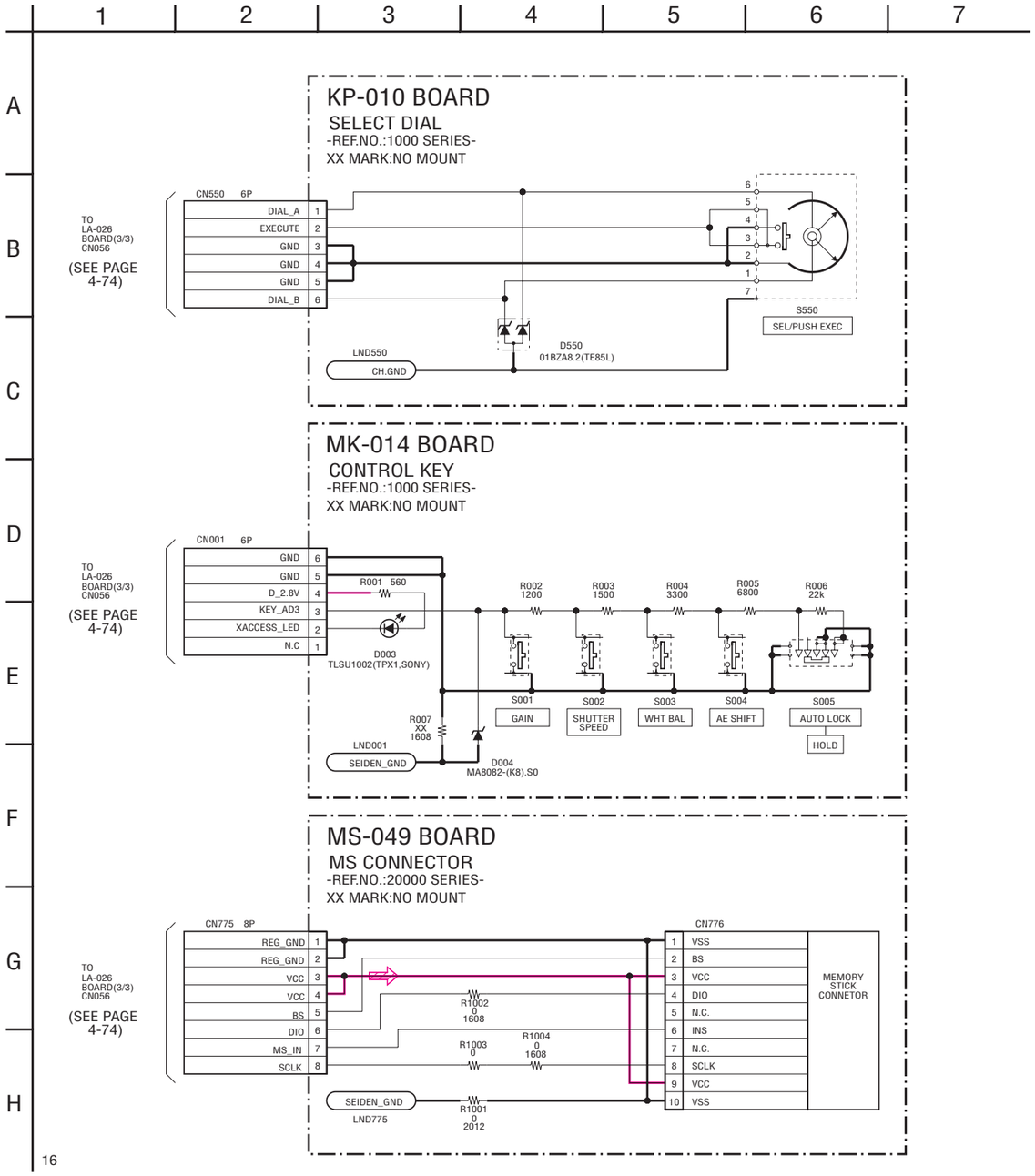

SELECT DIAL / CONTROL KEY / MS CONNECTOR

KP-010 / MK-014 / MS-049

FK-076 (CONTROL SWITCH) PRINTED WIRING BOARD

— Ref. No. FK-076 Board; 1,000 Series —

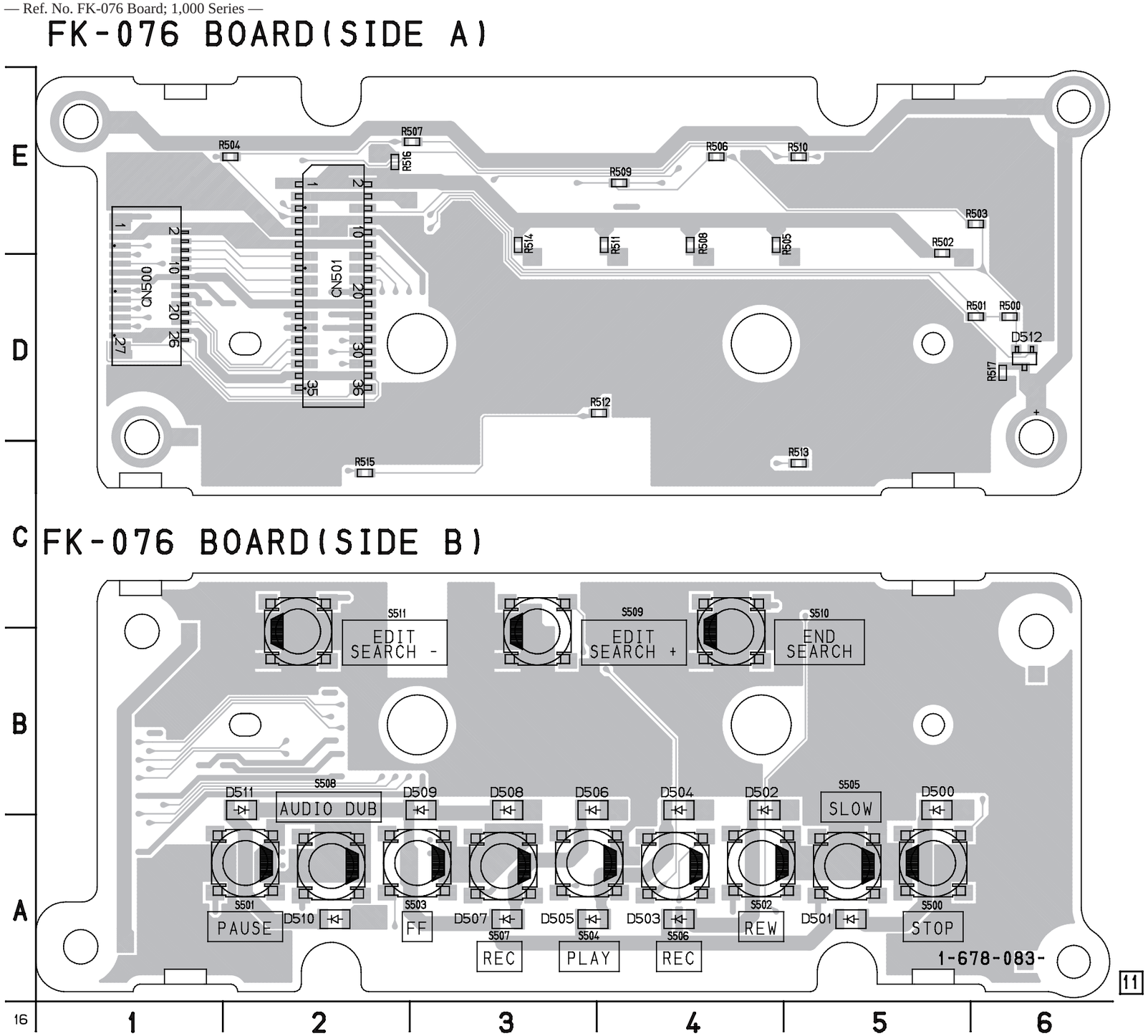

For printed wiring board

- Refer to page 4-121 for parts location.
- This board is six-layer print board. However, the patterns of layers two to five have not been included in the diagram.
- Chip parts

Diode

There are few cases that the part printed on this diagram isn't mounted in this model.

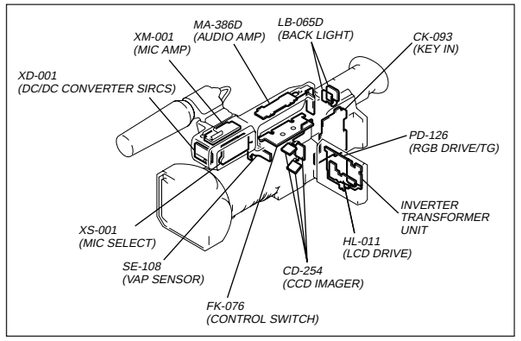

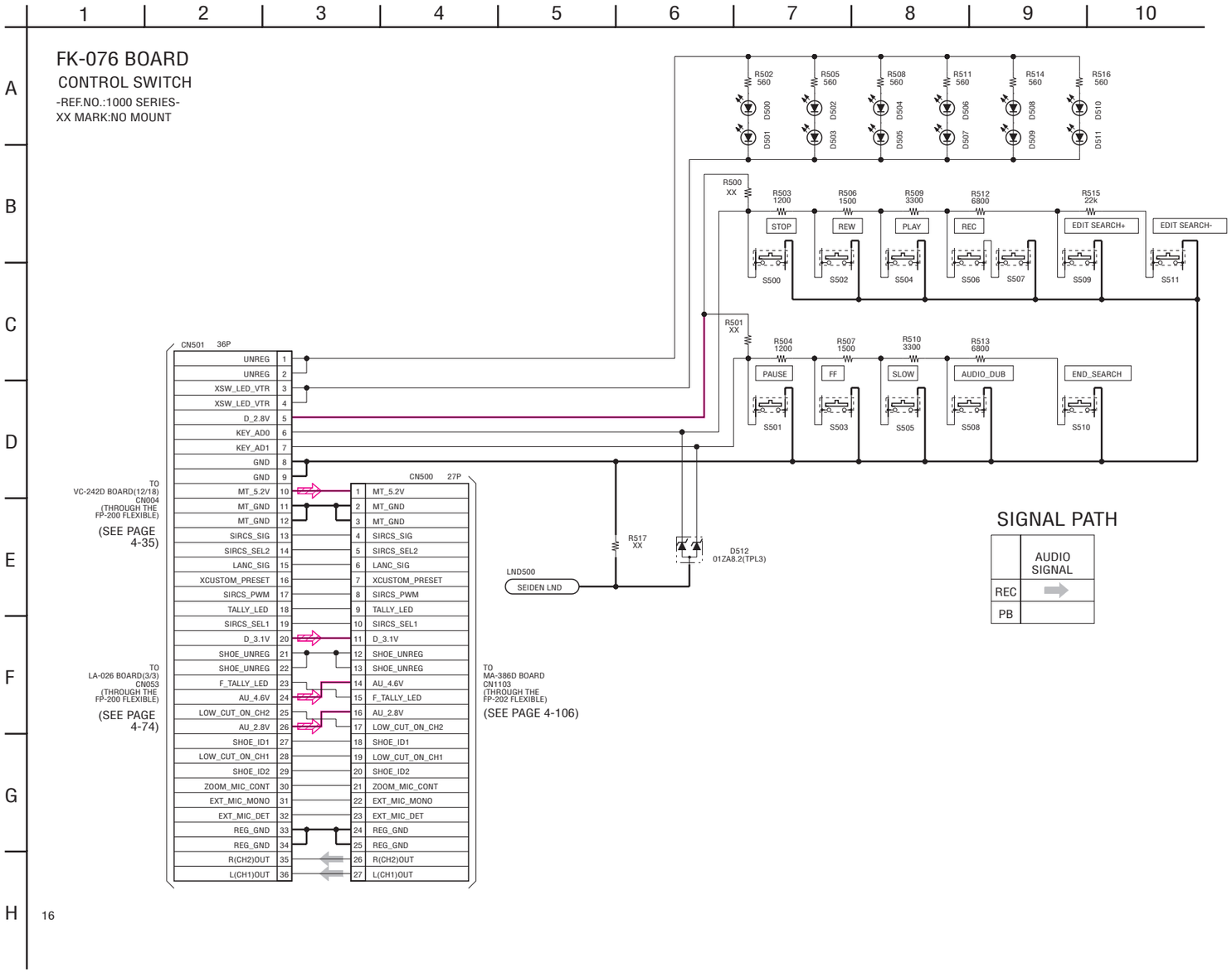

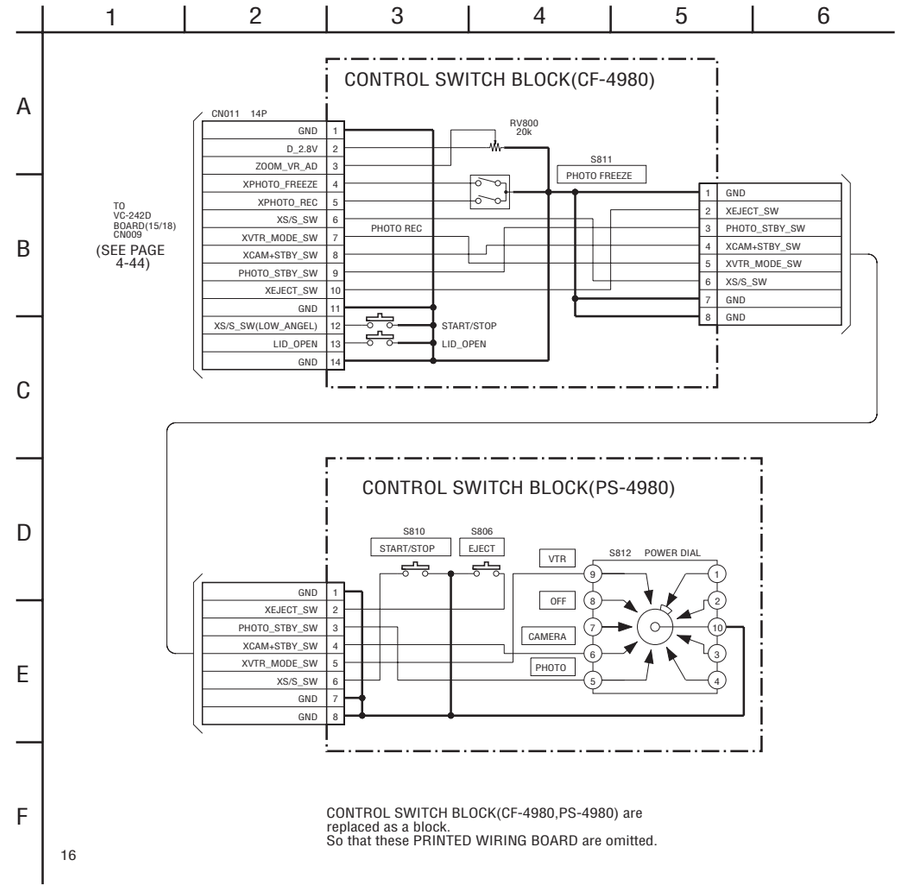

CONTROL SWITCH BLOCK(CF-4980,PS-4980) are
replaced as a block.
So that these PRINTED WIRING BOARD are omitted.

XD-001 (DC/DC CONVERTER SIRCS), XS-001 (MIC SELECT) PRINTED WIRING BOARDS

— Ref. No. XD-001, XS-001 Boards; 30,000 Series —

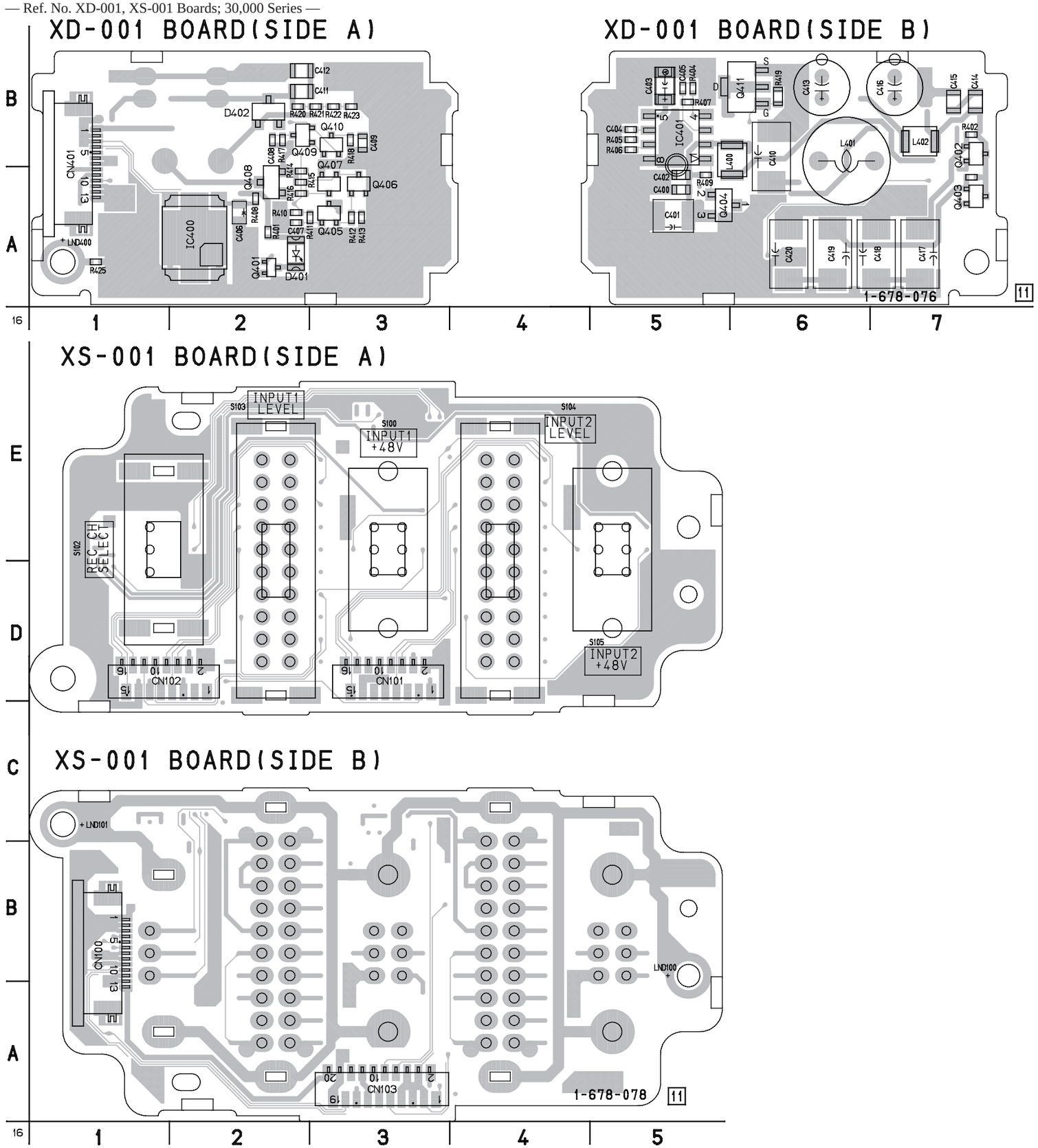

For printed wiring boards

- Refer to page 4-122 for parts location.
- These boards are six-layer print board. However, the patterns of layers two to five have not been included in the diagrams.
- Chip parts

Transistor

There are few cases that the part printed on this diagram isn't mounted in this model.

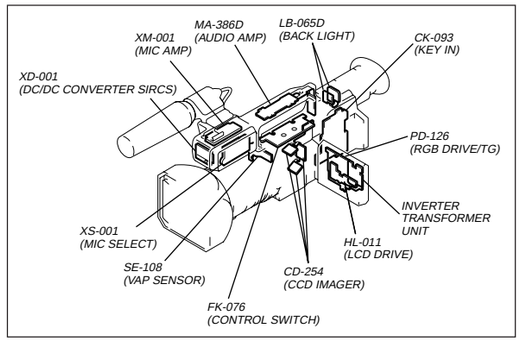

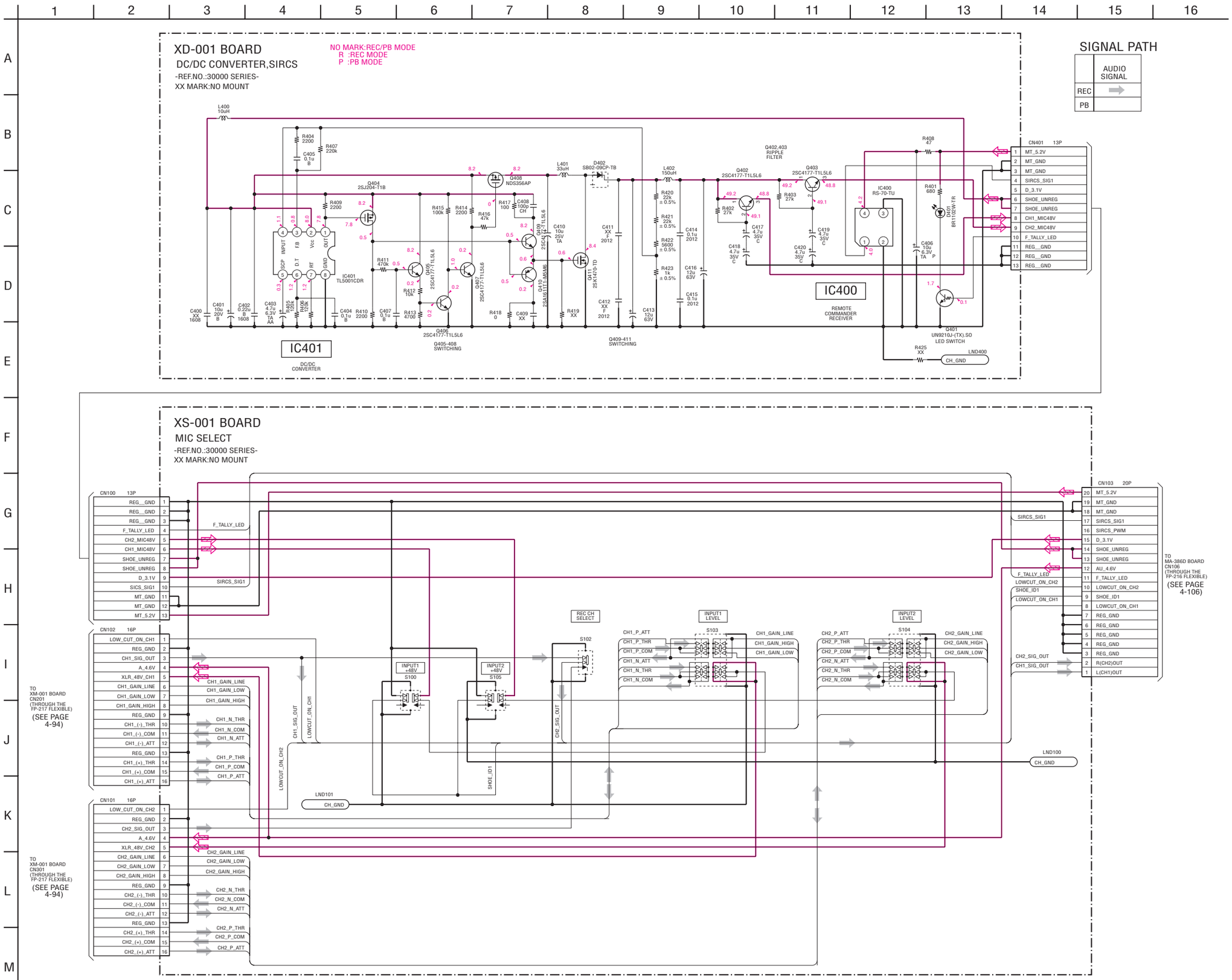

DC/DC CONVERTER SIRCS/MIC SELECT

XD-001 / XS-001

XM-001 (MIC AMP) PRINTED WIRING BOARD

— Ref. No. XM-001 Board; 30,000 Series —

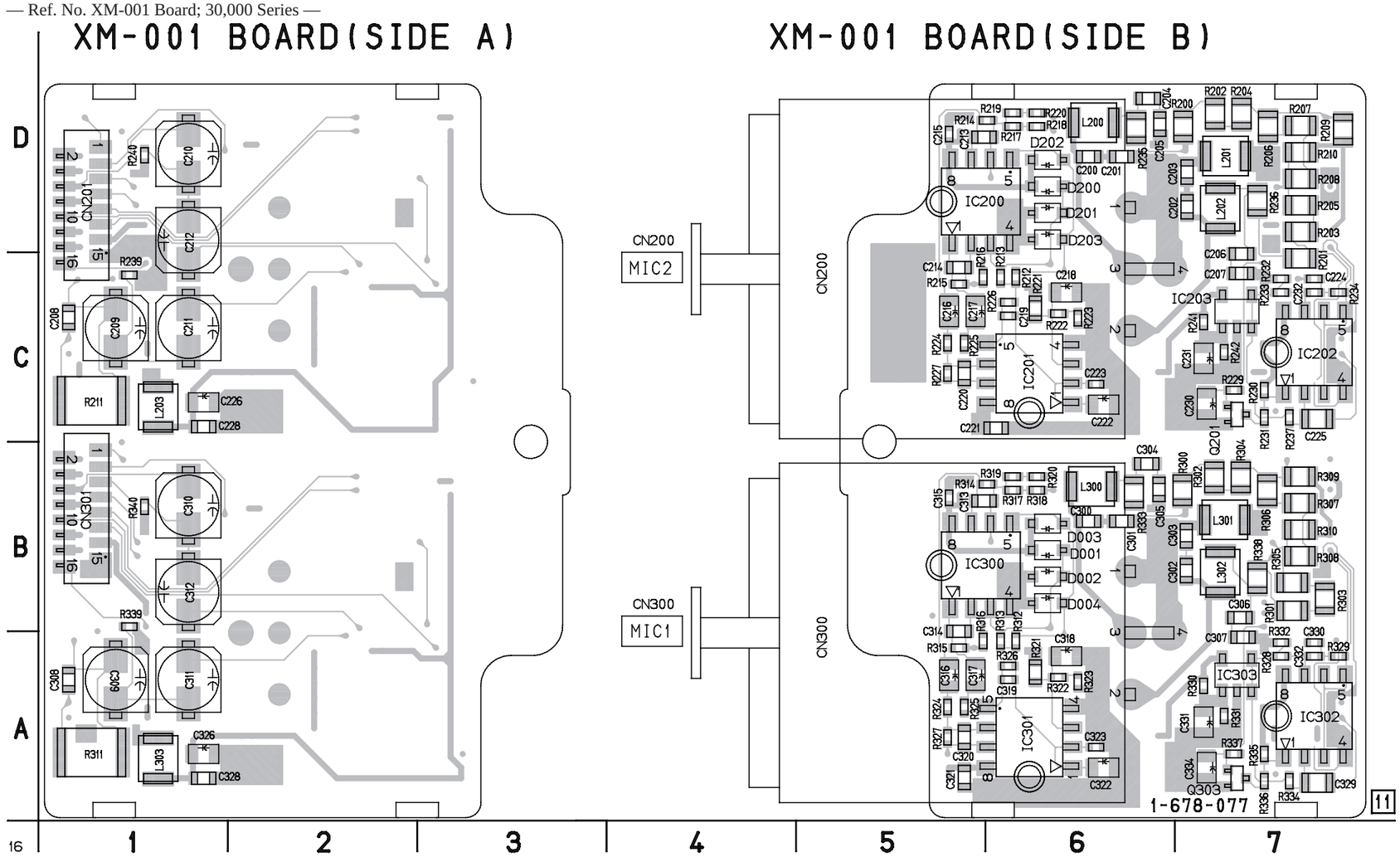

For printed wiring board

- Refer to page 4-122 for parts location.
- This board is four-layer print board. However, the patterns of layers two and three have not been included in the diagram.
- Chip parts

Transistor

There are few cases that the part printed on this diagram isn't mounted in this model.

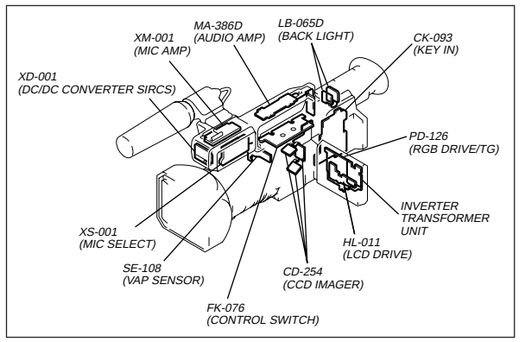

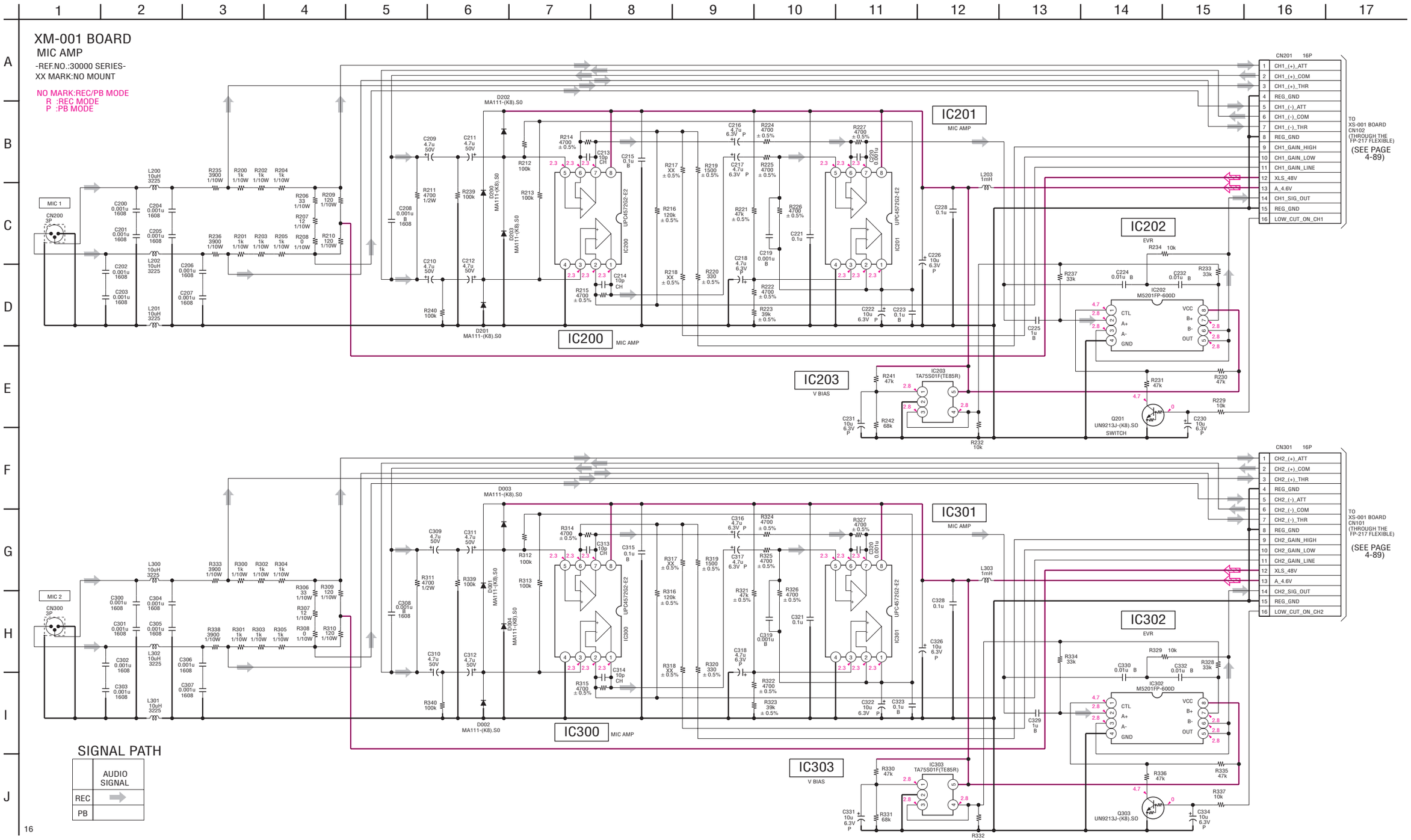
XM-001 BOARD
MIC AMP
-REF.NO.:30000 SERIES-
XX MARK:NO MOUNT
NO MARK:REC/PB MODE
R :REC MODE
P :PB MODE
MIC 1
CN200
3P
MIC 2
CN300
3P
IC200
MIC AMP
IC201
MIC AMP
IC202
EVR
IC203
V BIAS
IC300
MIC AMP
IC301
MIC AMP
IC302
EVR
IC303
V BIAS
CN201 16P
1 CH1_(+)_ATT
2 CH1_(+)_COM
3 CH1_(+)_THR
4 REG_GND
5 CH1_(-)_ATT
6 CH1_(-)_COM
7 CH1_(-)_THR
8 REG_GND
9 CH1_GAIN_HIGH
10 CH1_GAIN_LOW
11 CH1_GAIN_LINE
12 XLS_48V
13 A_4.6V
14 CH1_SIG_OUT
15 REG_GND
16 LOW_CUT_ON_CH1
TO XS-001 BOARD CN102 (THROUGH THE FP-217 FLEXIBLE)
(SEE PAGE 4-89)
CN301 16P
1 CH2_(+)_ATT
2 CH2_(+)_COM
3 CH2_(+)_THR
4 REG_GND
5 CH2_(-)_ATT
6 CH2_(-)_COM
7 CH2_(-)_THR
8 REG_GND
9 CH2_GAIN_HIGH
10 CH2_GAIN_LOW
11 CH2_GAIN_LINE
12 XLS_48V
13 A_4.6V
14 CH2_SIG_OUT
15 REG_GND
16 LOW_CUT_ON_CH2
TO XS-001 BOARD CN101 (THROUGH THE FP-217 FLEXIBLE)
(SEE PAGE 4-89)
SIGNAL PATH
AUDIO SIGNAL
REC
PB

LB-065D (BACK LIGHT) PRINTED WIRING BOARD

— Ref. No. LB-065D Board; 1,000 Series —

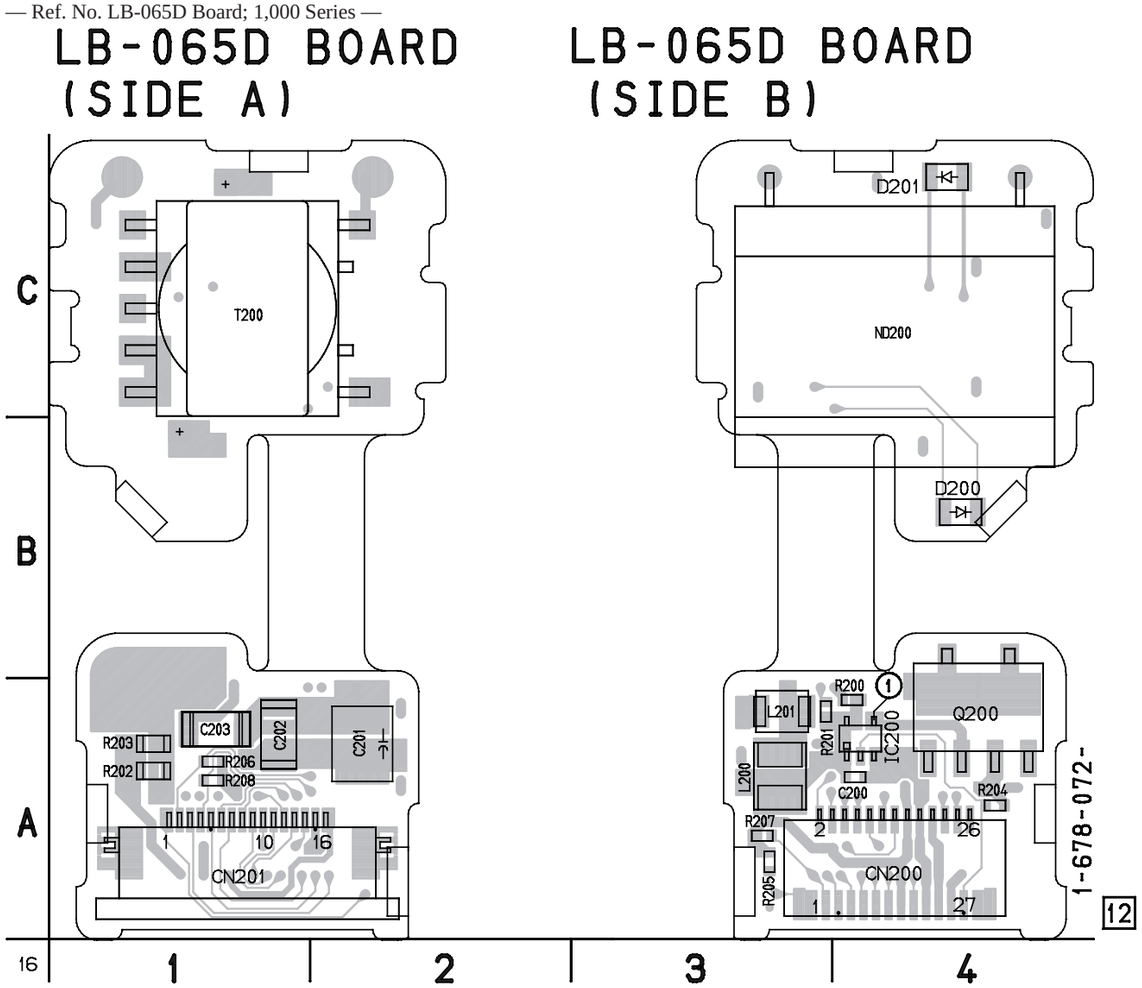

For printed wiring board

- Refer to page 4-122 for parts location.
- This board is four-layer print board. However, the patterns of layers two and three have not been included in the diagram.

There are few cases that the part printed on this diagram isn't mounted in this model.

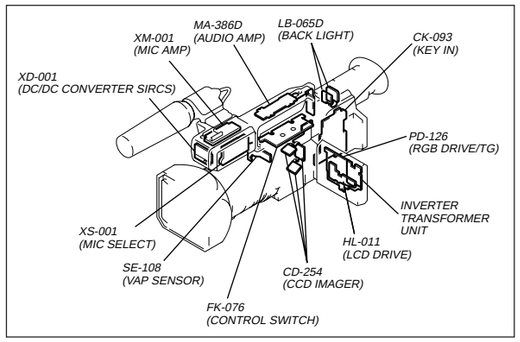

For Schematic Diagram

• Refer to page 4-116 for waveform.

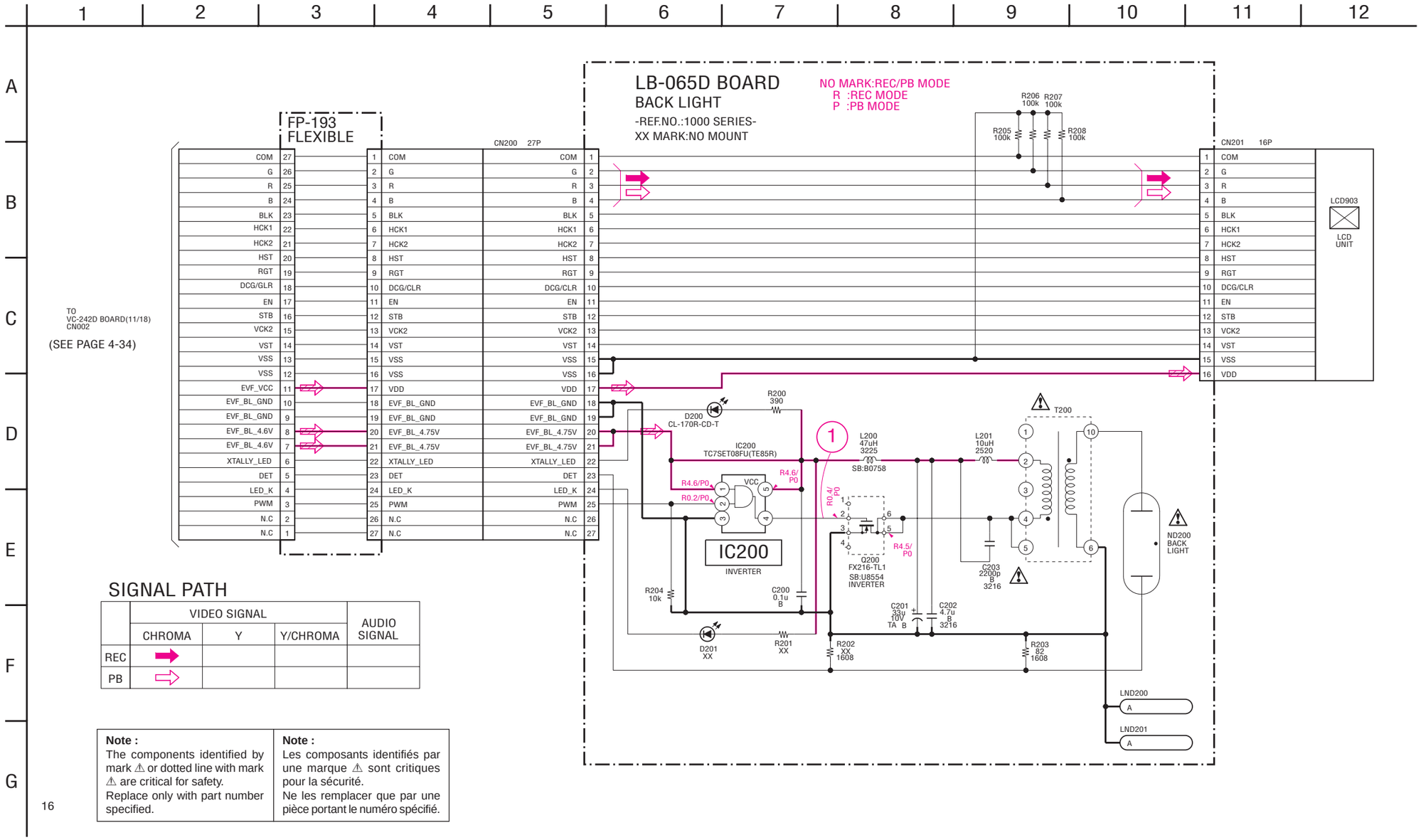

SIGNAL PATH

	VIDEO SIGNAL			AUDIO SIGNAL
	CHROMA	Y	Y/CHROMA	
REC	➡			
PB	⇨			

Note :	Note :
The components identified by mark ⚠ or dotted line with mark ⚠ are critical for safety. Replace only with part number specified.	Les composants identifiés par une marque ⚠ sont critiques pour la sécurité. Ne les remplacer que par une pièce portant le numéro spécifié.

HL-011 (LCD DRIVE) PRINTED WIRING BOARD

— Ref. No. HL-011 Board; 20,000 Series —

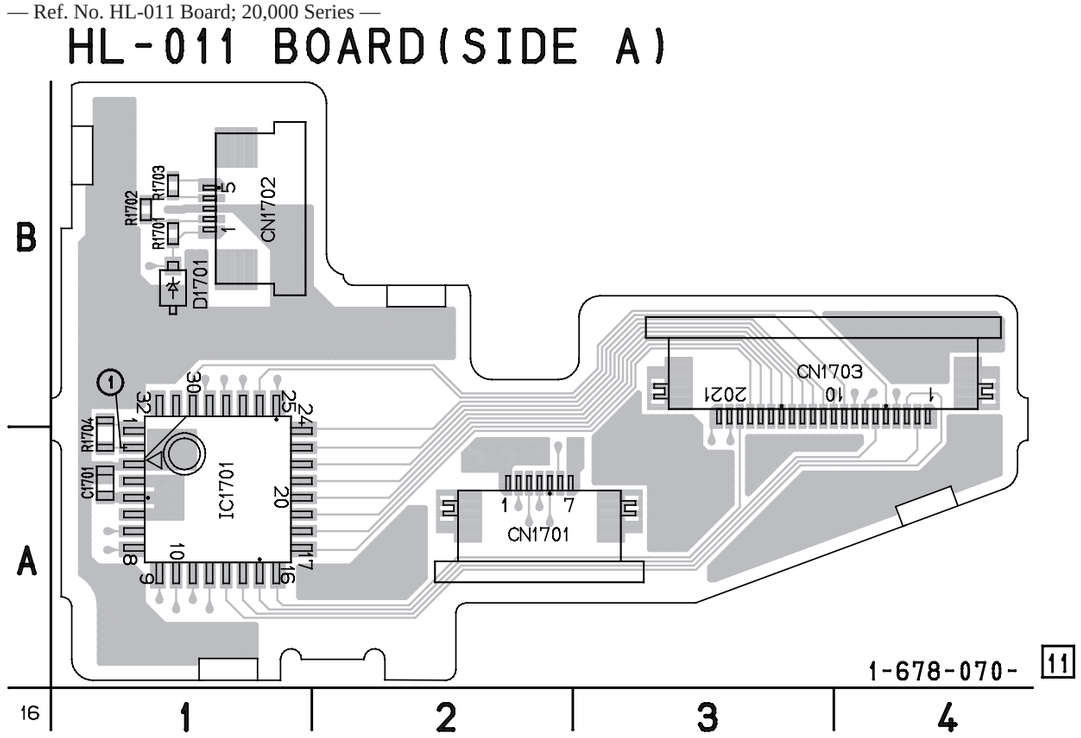

FP-196 FLEXIBLE BOARD

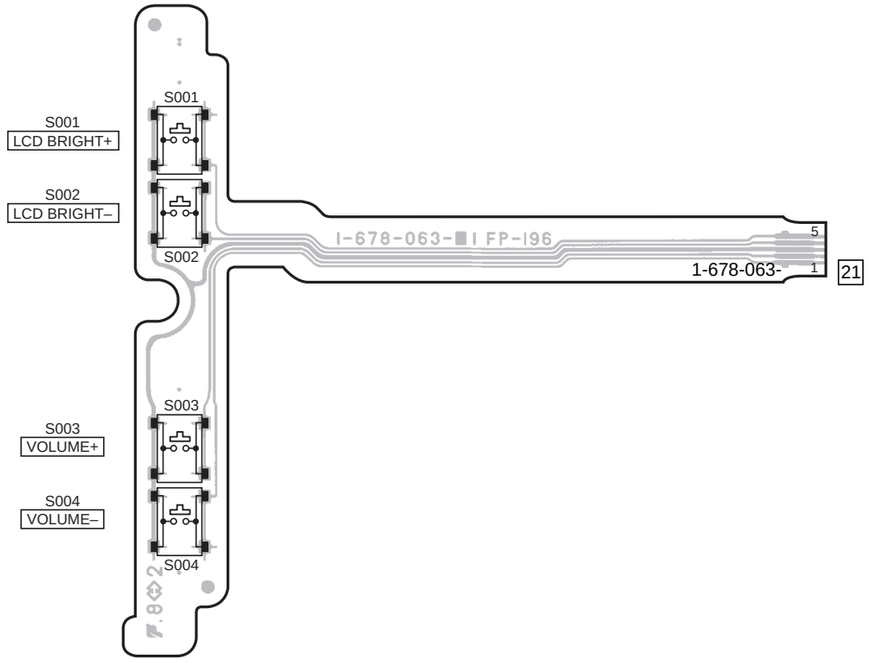

For printed wiring board

- Refer to page 4-122 for parts location.
- This board is six-layer print board. However, the patterns of layers two to six have not been included in the diagram.

There are few cases that the part printed on this diagram isn't mounted in this model.

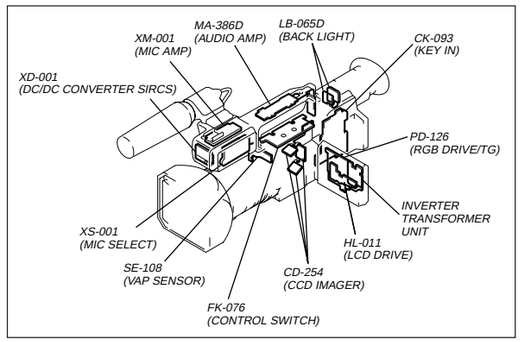

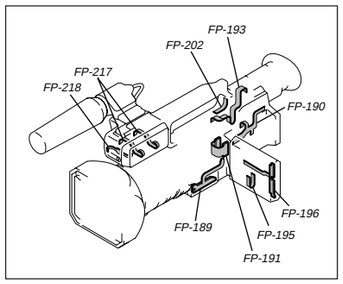

For Schematic Diagram

• Refer to page 4-116 for waveform.

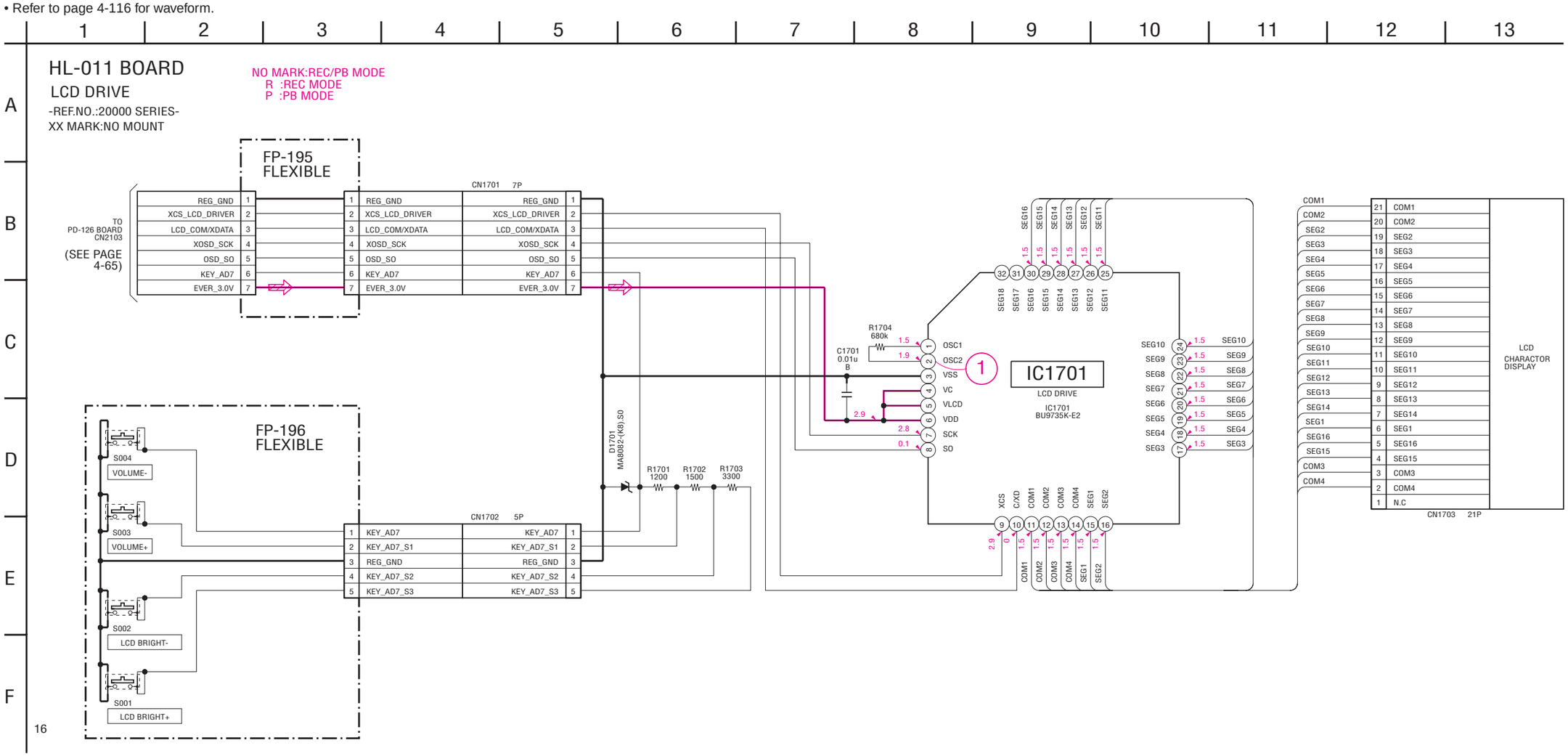

LCD DRIVE
HL-011

MA-386D (AUDIO AMP) PRINTED WIRING BOARD

— Ref. No. MA-386D Board; 20,000 Series —

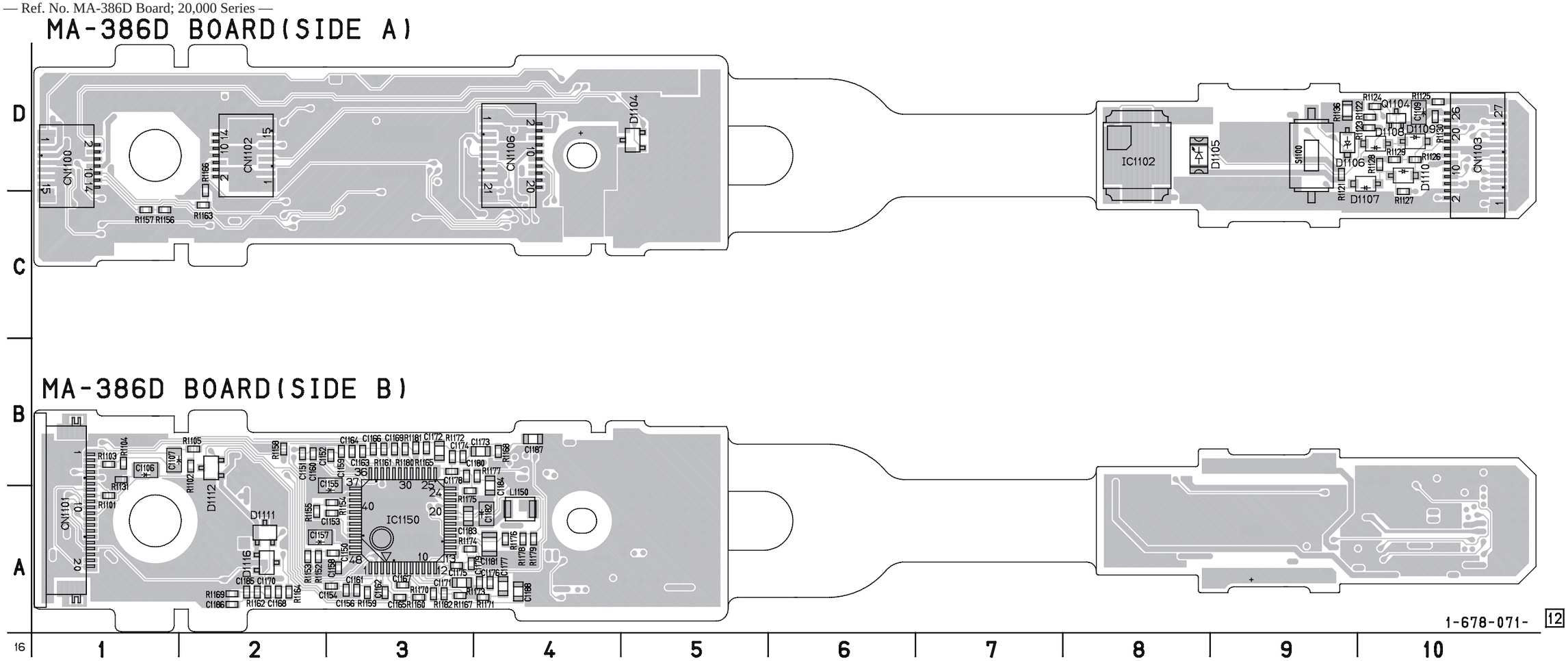

For printed wiring board

- Refer to page 4-123 for parts location.
- This board is four-layer print board. However, the patterns of layers two and three have not been included in the diagram.
- Chip parts

Diode

There are few cases that the part printed on this diagram isn't mounted in this model.

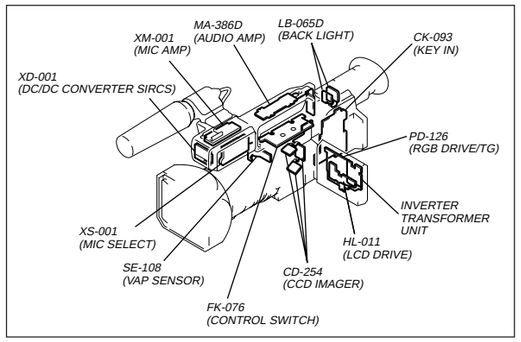

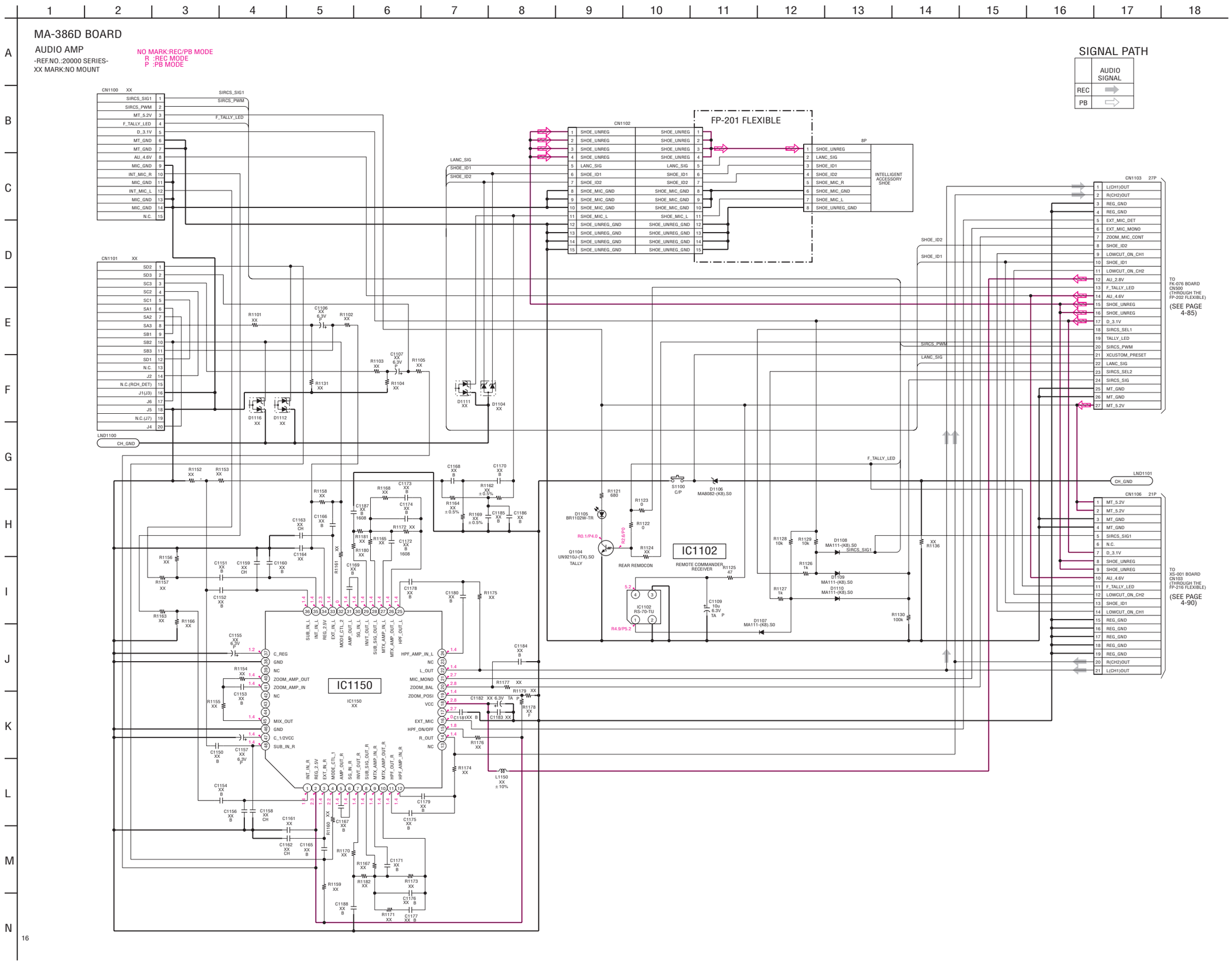
MA-386D BOARD
AUDIO AMP
-REF.NO.:20000 SERIES-
XX MARK:NO MOUNT
NO MARK:REC/PB MODE
R :REC MODE
P :PB MODE
SIGNAL PATH
AUDIO SIGNAL
REC
PB
FP-201 FLEXIBLE
CN1100 XX
CN1101 XX
CN1102
CN1103 27P
CN1106 21P
INTELLIGENT ACCESSORY SHOE
TO FK-076 BOARD CN500 (THROUGH THE FP-202 FLEXIBLE)
(SEE PAGE 4-85)
TO XS-001 BOARD CN103 (THROUGH THE FP-216 FLEXIBLE)
(SEE PAGE 4-90)
IC1150
IC1150 XX
IC1102
IC1102 RS-70-TU
REMOTE COMMANDER RECEIVER
REAR REMOCON
TALLY
LND1100
LND1101
CH_GND
S1100 C/P
D106 MA8082-(K8).S0
D1105 BR1102W-TR
Q1104 UN9210J-(TX).S0
D108 MA111-(K8).S0
D109 MA111-(K8).S0
D110 MA111-(K8).S0
D107 MA111-(K8).S0
D1116 XX
D1112 XX
D1111 XX
D1104 XX
L1150 XX ±10%

DD-138D (DC/DC CONVERTER, DC REGURATOR) PRINTED WIRING BOARD

— Ref. No. DD-138D Board; 1,000 Series —

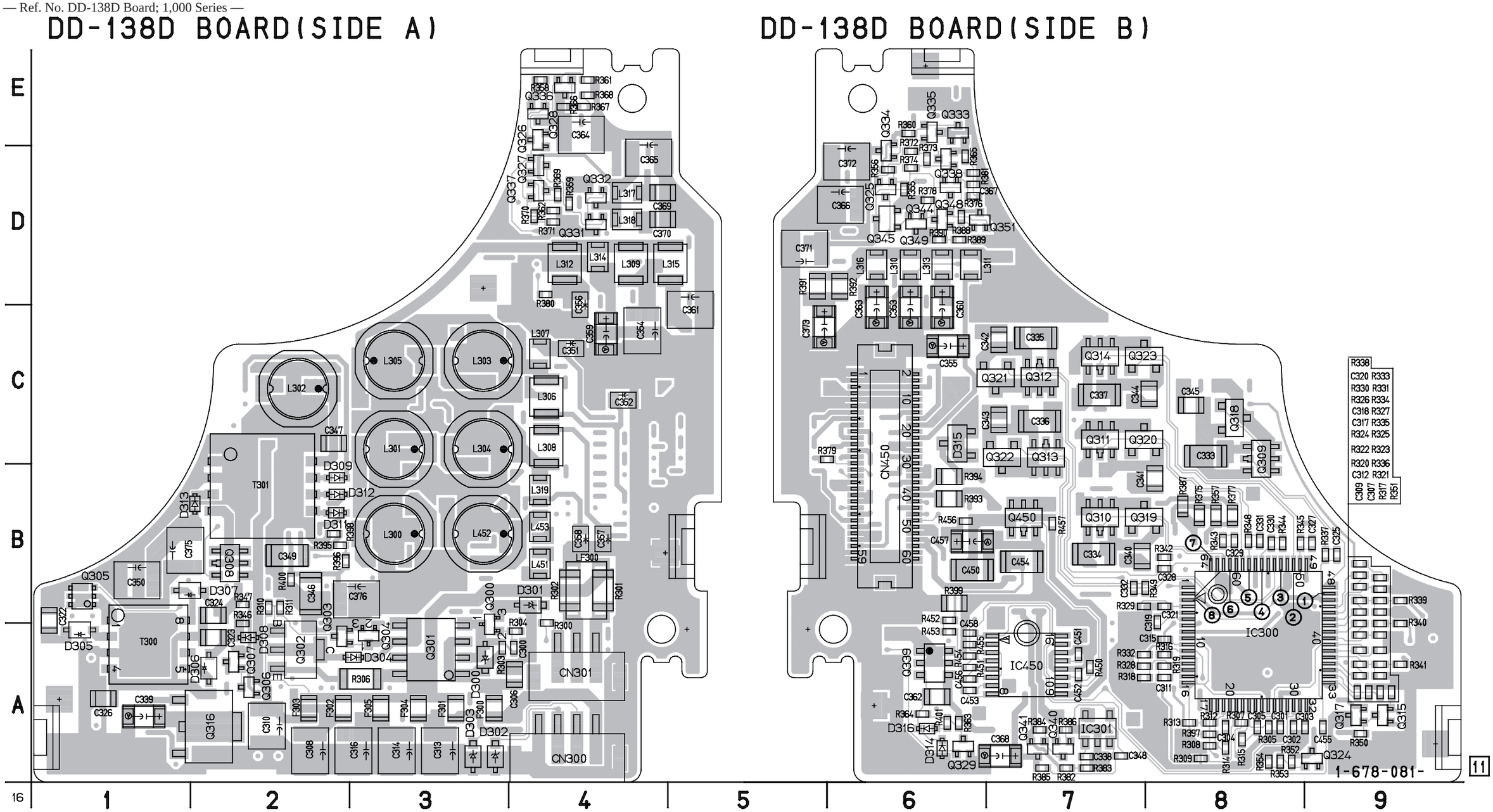

For printed wiring board

- Refer to page 4-123 for parts location.
- This board is six-layer print board. However, the patterns of layers two to five have not been included in the diagram.
- Chip parts

Transistor

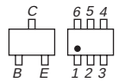

Diode

There are few cases that the part printed on this diagram isn't mounted in this model.

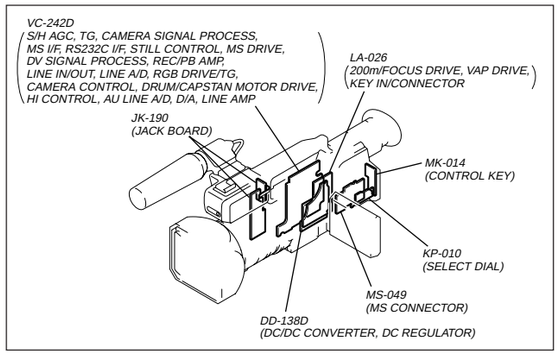

DC/DC CONVERTER, DC REGURATOR

DD-138D

For Schematic Diagram

• Refer to page 4-117 for waveforms.

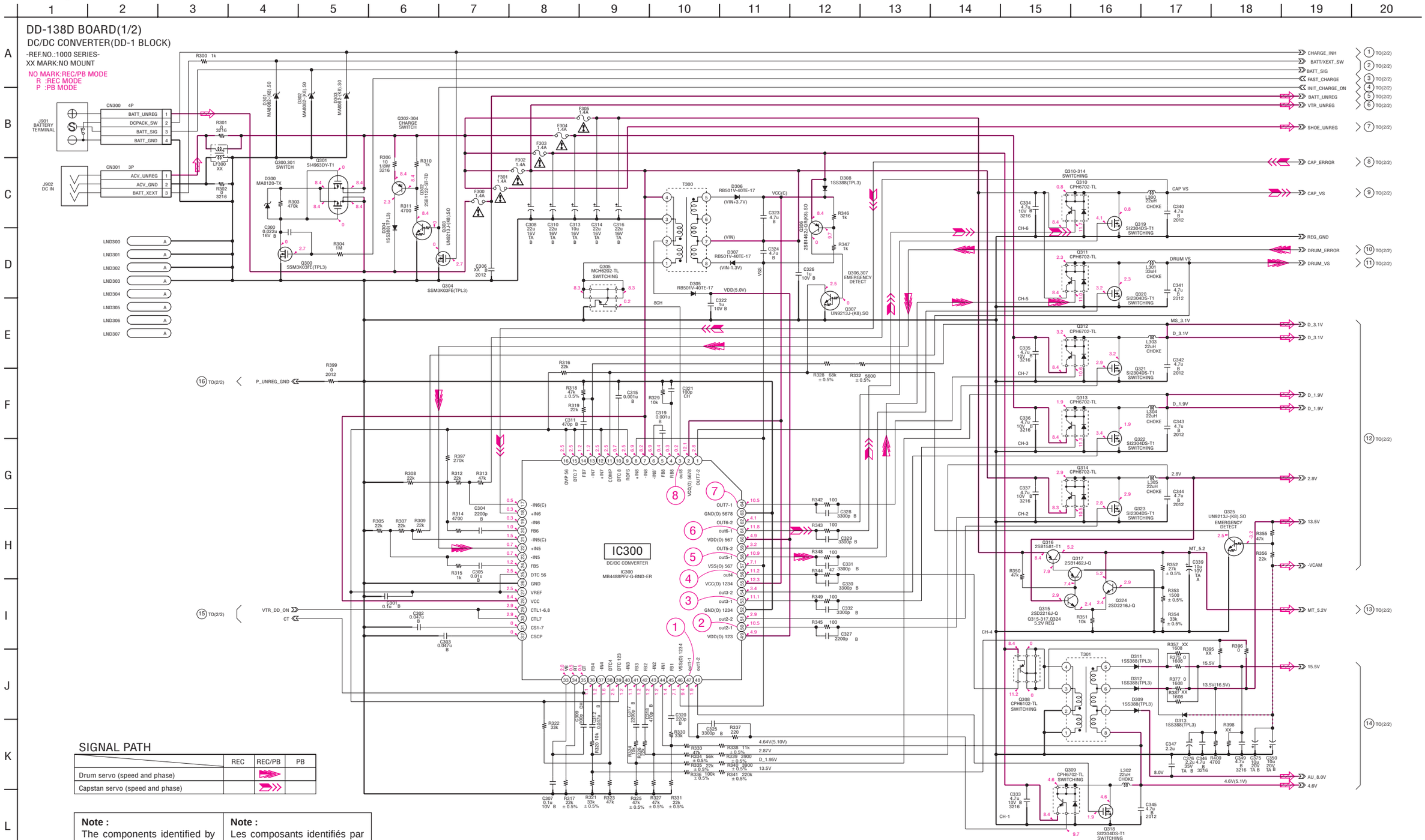

SIGNAL PATH

	REC	REC/PB	PB
Drum servo (speed and phase)			
Capstan servo (speed and phase)			

Note :	Note :
The components identified by mark ⚠ or dotted line with mark ⚠ are critical for safety. Replace only with part number specified.	Les composants identifiés par une marque ⚠ sont critiques pour la sécurité. Ne les remplacer que par une pièce portant le numéro spécifié.

For Schematic Diagram

• Refer to page 4-107 for printed wiring board.

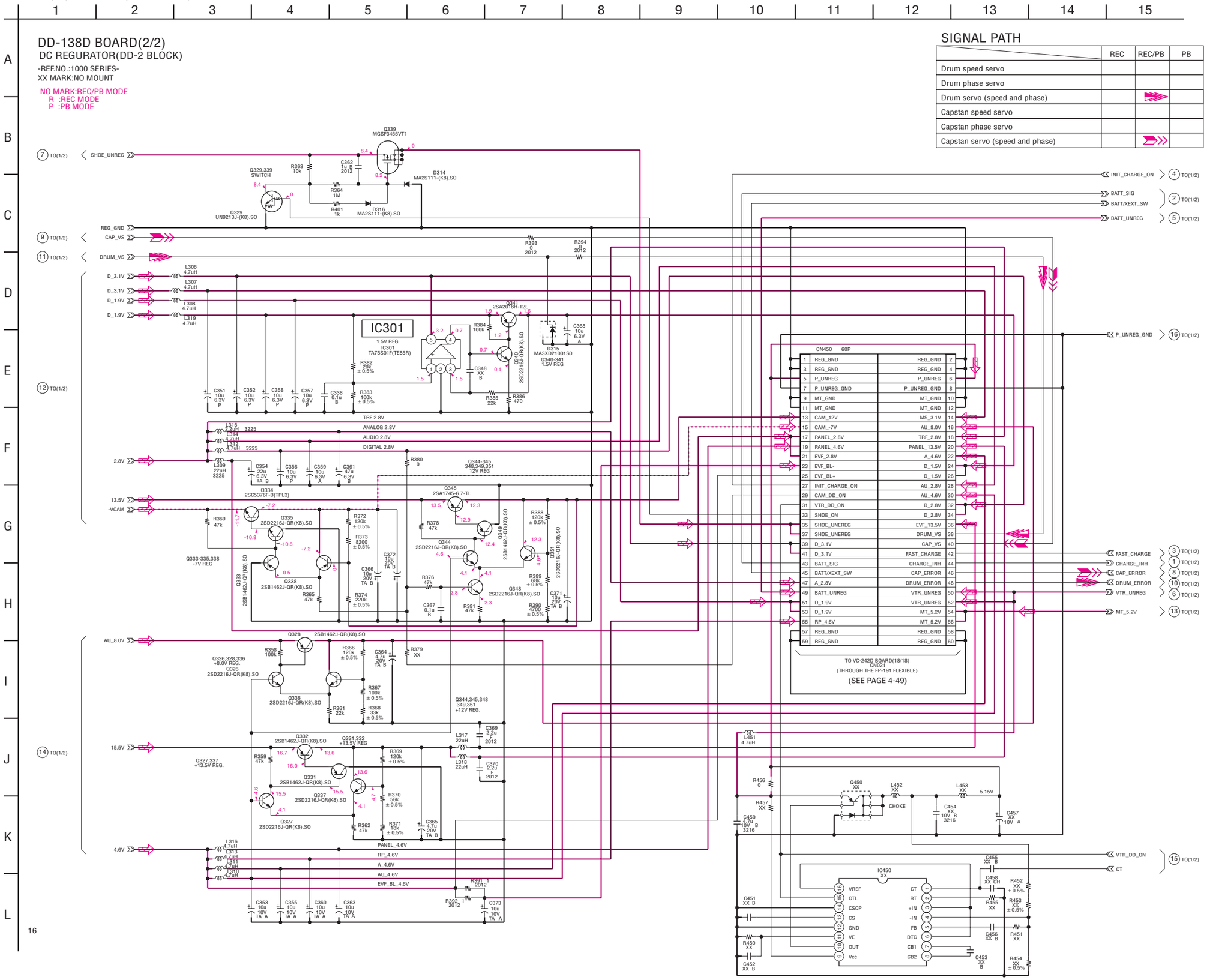

DC REGURATOR
DD-138D (2/2)

4-3. WAVEFORMS

CD-254 BOARD
REC

① IC100, 101, 102 ①,②

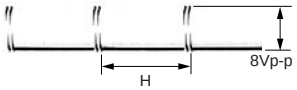

② IC100, 101, 102 ③,④

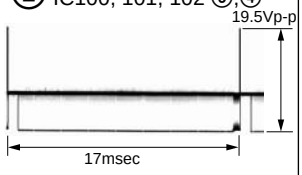

③ IC100, 101, 102 ⑪

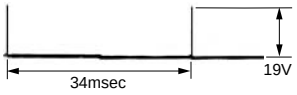

④ IC100, 101, 102 ⑭

⑤ IC100, 101, 102 ⑮,⑯

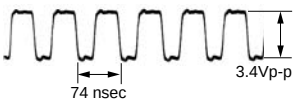

⑥ IC101 ⑧

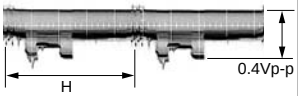

⑦ IC102 ⑧

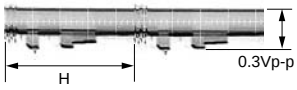

⑧ IC100 ⑧

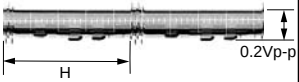

VC-242D BOARD (1/18)
REC/PB

① IC704 ㉙

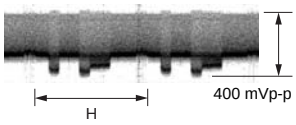

② IC704 ㉜

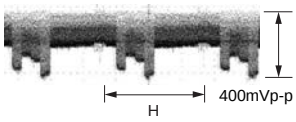

③ IC704 ㉟

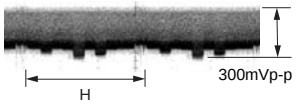

④ IC704 ⑤, IC706 ㉑

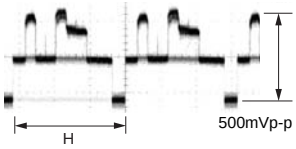

⑤ IC704 ⑦, IC706 ⑲

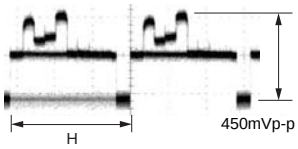

⑥ IC704 ⑨, IC706 ⑰

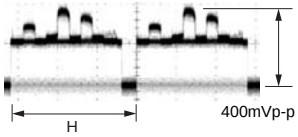

⑦ IC706 ⑭

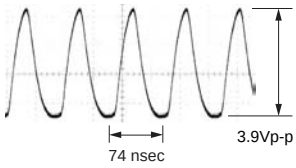

⑧ IC705 ㊺

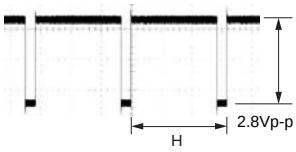

⑨ IC705 ㊻

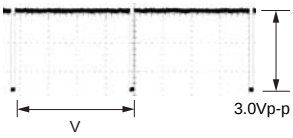

⑩ IC705 ㊼

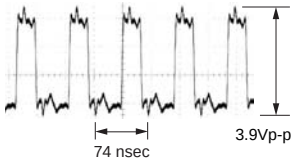

⑪ IC705 ㊽

⑫ IC705 ①

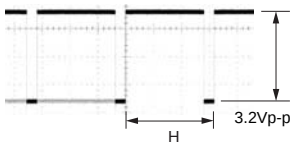

⑬ IC705 ②

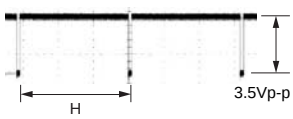

⑭ IC705 ⑥

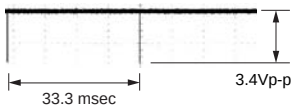

⑮ IC705 ⑤,⑨

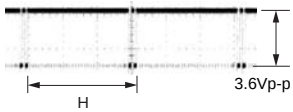

⑯ IC705 ⑧

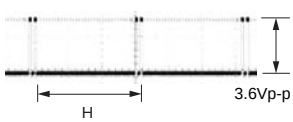

⑰ IC705 ⑩

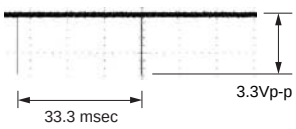

⑱ IC705 ⑪

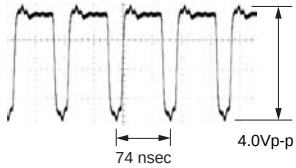

⑲ IC705 ⑫

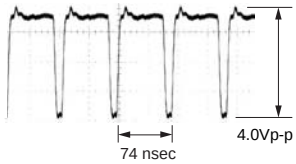

⑳ IC705 ⑭

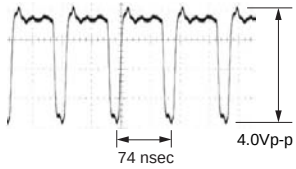

㉑ IC705 ⑰,⑱,⑲

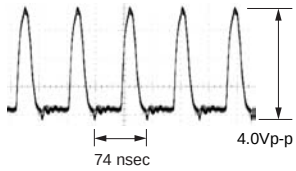

㉒ IC705 ㉒,㉓,㉕,㉖,㉘,㉙

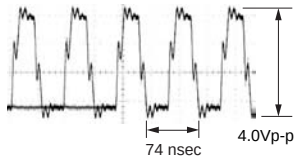

㉓ IC705 ㉛

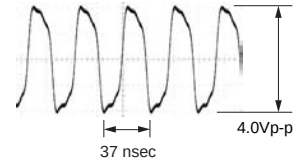

VC-242D BOARD (2/18)
REC/PB

㉔ IC771 ㊼,㊼

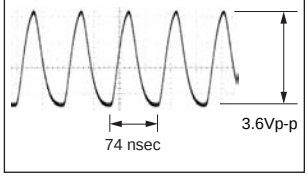

VC-242D BOARD (4/18)
MEMORY STICK

㉕ IC1401 ㊾

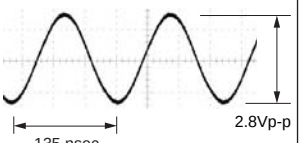

VC-242D BOARD (5/18)
REC/PB

㉖ IC1411 ④

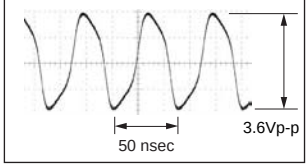

VC-242D BOARD (6/18)
REC/PB

㉗ IC301 ㊺ (L304)

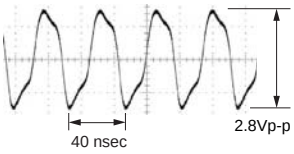

㉘ IC301 ㉓ (L303)

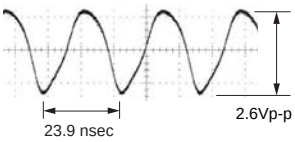

㉙ IC301 ㉘ (C307)

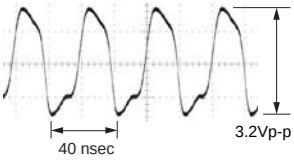

VC-242D BOARD (8/18)

㉚ IC102 ㉗ PB ONLY

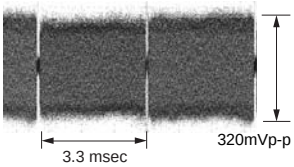

㉛ IC102 ㉛,㉝
REC/PB

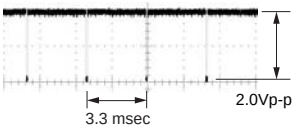

㉜ IC102 ㉟
REC/PB

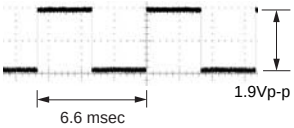

㉝ IC102 ㊵
REC/PB

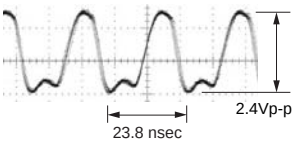

VC-242D BOARD (9/18)
REC/PB

㉞ IC1301 ㊷ (VIDEO IN)

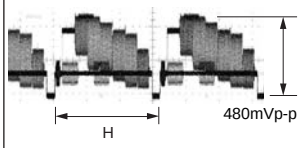

㉟ IC1301 ㊻

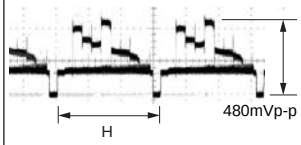

㊱ IC1301 ⑦

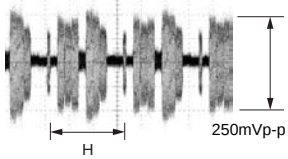

㊲ IC1301 ⑭ (S-VIDEO OUT)

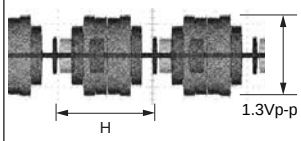

㊳ IC1301 ⑱ (S-VIDEO OUT)

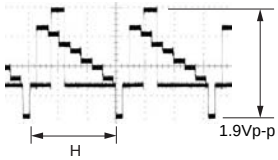

㊴ IC1301 ㉒ (VIDEO OUT)

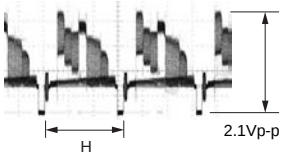

㊵ IC1301 ㉘ (VIDEO IN)

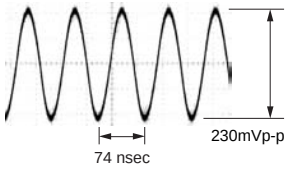

㊶ IC1301 ㊱ (VIDEO IN)

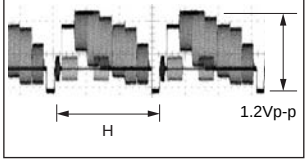

VC-242D BOARD (10/18)

㊷ IC903 ② LINE REC

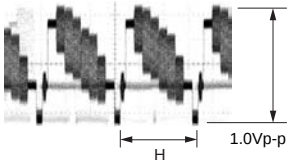

㊸ IC903 ㉕ REC/PB

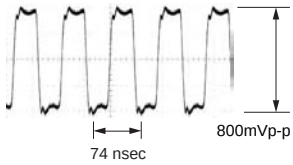

㊹ IC903 ㊽ REC/PB

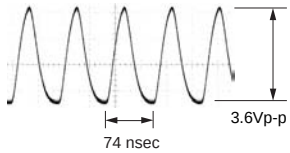

VC-242D BOARD (11/18)
REC/PB

45 IC1802 46 (EVF)

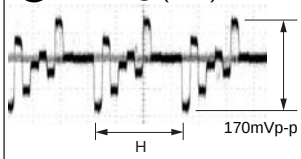

53 IC1803 48 (EVF)

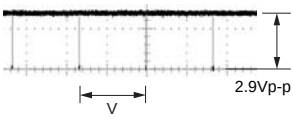

46 IC1802 47 (EVF)

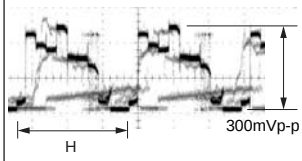

54 IC1803 1 (EVF)

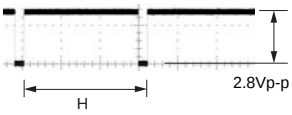

47 IC1802 48 (EVF)

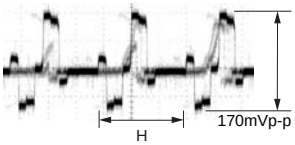

55 IC1803 14 (EVF)

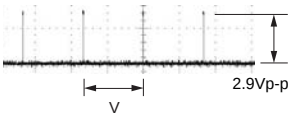

48 IC1802 20 (EVF)

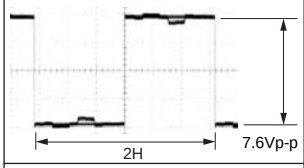

56 IC1803 15 (EVF)

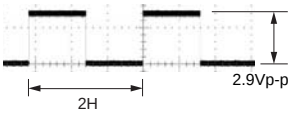

49 IC1802 22 (EVF)

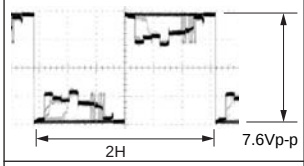

57 IC1803 21 (EVF)

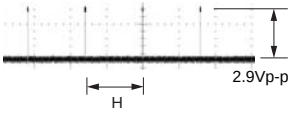

50 IC1802 24 (EVF)

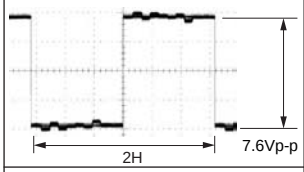

58 IC1803 23 (EVF)

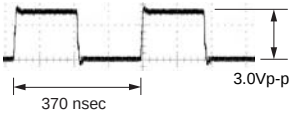

51 IC1803 37 (EVF)

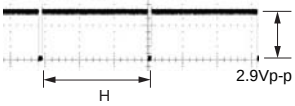

59 IC1803 26 (EVF)

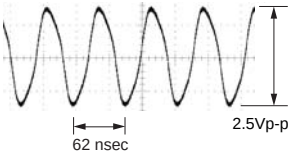

52 IC1803 40 (EVF)

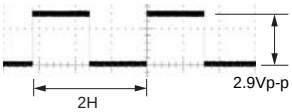

60 IC1803 32,33,35 (EVF)

VC-242D BOARD (12/18)
REC/PB

61 IC802 41 (X801)

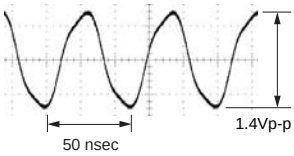

VC-242D BOARD (13/18)
REC/PB

62 IC501 1 (C502)

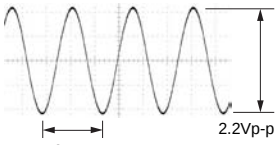

VC-242D BOARD (14/18)
REC/PB

63 IC401 40

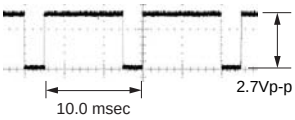

64 IC401 48

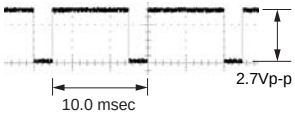

65 IC401 59

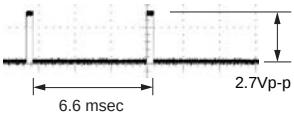

66 IC401 1

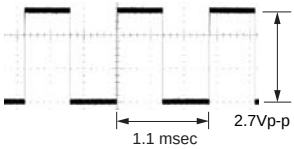

67 IC402 32

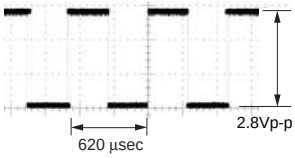

VC-242D BOARD (15/18)
REC/PB

68 IC1104 40 (X1101)

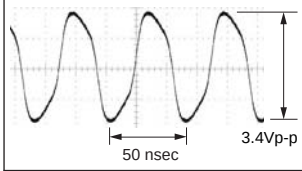

69 IC1104 53 (R1203)

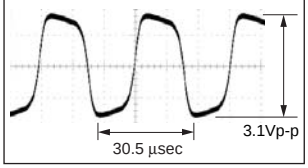

VC-242D BOARD (16/18)
REC/PB

70 IC1002 10

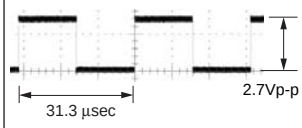

71 IC1002 11

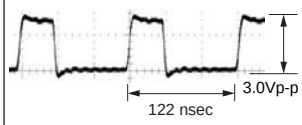

72 IC1002 12

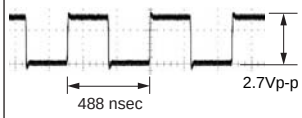

PD-126 BOARD
REC/PB

① IC2101 ㊻

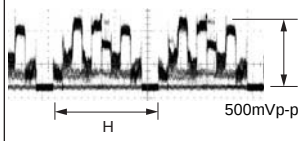

② IC2101 ㊼

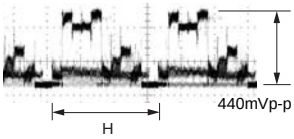

③ IC2101 ㊽

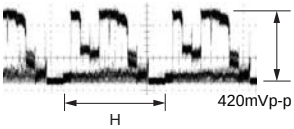

④ IC2101 ⑳

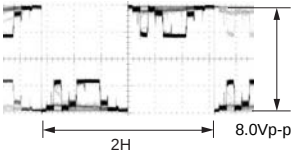

⑤ IC2101 ㉒

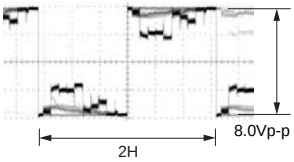

⑥ IC2101 ㉔

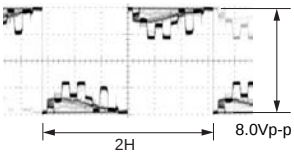

⑦ IC2103 ①

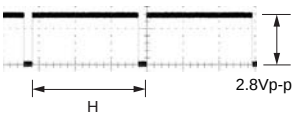

⑧ IC2103 ㉖

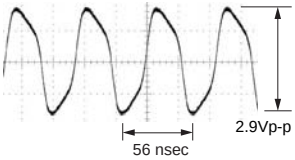

⑨ IC2103 ㊽

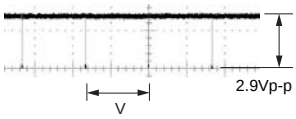

LB-065D BOARD
REC/PB

① IC200 ④

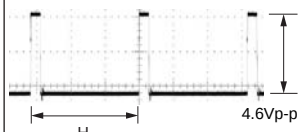

HL-011 BOARD
REC/PB

① IC1701 ②

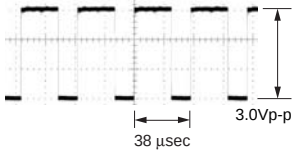

DD-138D BOARD (1/2)

CAMERA REC

① IC300 ㊼

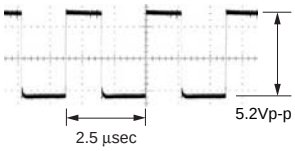

② IC300 ㊿

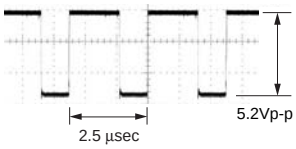

③ IC300 ㊸

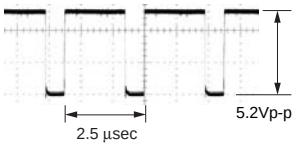

④ IC300 ㊻

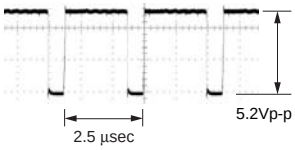

⑤ IC300 ㊽

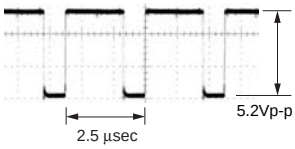

⑥ IC300 ㊶

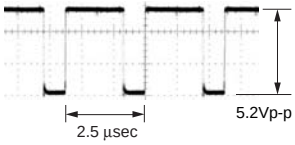

⑦ IC300 ㊹

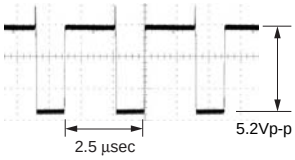

⑧ IC300 ③

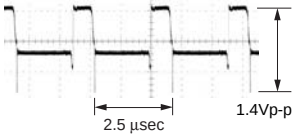

4-4. MOUNTED PARTS LOCATION

CD-254 BOARD (SIDE A)

C100	A-2
C101	D-1
C102	A-1
C103	D-2
C104	A-2
C105	D-2
C108	G-2
C109	G-1
C110	G-1
C111	G-1
C112	A-1
C113	A-1
C114	D-1
C115	D-1
C117	A-1
C118	D-1
C119	G-1
C120	G-1
C130	A-1
C131	A-1
C132	D-1
C133	D-1
C134	G-1
C135	G-1
IC103	A-1
IC104	D-1
IC105	G-2
L100	A-2
L101	D-2
L104	D-1
L105	G-1
L106	A-1
L107	G-1
R100	A-1
R101	A-1
R102	D-1
R103	D-1
R104	G-1
R105	G-1
R106	A-1
R107	D-2
R108	D-2
R109	A-1
R110	G-2
R111	G-2
R112	A-1
R114	G-2

CD-254 BOARD (SIDE B)

CN100	E-6
IC100	G-9
IC101	A-9
IC102	D-9

VC-242D BOARD (SIDE A)

C102	B-3
C103	B-4
C104	B-3
C105	B-4
C106	B-3
C108	B-3
C110	B-3
C111	B-3
C112	B-3
C113	B-3
C114	B-3
C115	B-3
C116	B-3
C117	B-3
C118	B-3
C119	B-3
C401	A-5
C402	B-5
C403	B-6
C404	B-5
C405	B-5
C406	B-5
C407	B-5
C408	B-6
C409	B-6
C410	B-6
C411	B-5
C412	B-6
C413	B-6
C414	B-5
C415	B-5
C416	B-6
C418	B-5
C419	B-6
C420	B-6
C421	B-5
C422	B-5
C423	B-4
C424	B-5
C425	C-5
C426	C-6
C427	C-5
C428	C-5
C429	C-5
C430	C-5
C431	C-5
C432	B-6
C433	B-6
C434	B-6
C435	B-6
C436	B-6
C437	B-6
C438	B-7
C440	B-7
C701	F-5
C702	F-7
C703	G-7
C704	F-6
C705	G-7
C706	E-7
C707	E-6
C708	E-6
C709	E-6
C710	E-6
C711	E-5
C712	E-5
C713	E-6
C714	E-6
C715	E-6
C716	F-6
C717	F-7
C719	E-7
C720	D-7
C721	D-6
C722	D-6
C723	E-7
C724	D-6
C725	E-7
C731	D-7
C732	D-6
C733	D-6
C735	D-7
C736	D-7
C737	D-7
C738	E-6
C739	E-6
C748	D-7
C750	D-7
C751	D-7
C752	D-7
C756	D-6
C757	D-6
C758	C-7
C759	C-6
C760	F-7
C761	F-6
C762	F-7
C763	F-6
C764	F-6
C765	E-6
C766	E-6
C767	E-5
C771	C-6
C772	C-5
C801	E-2
C802	E-2
C803	F-3
C805	F-3
C806	F-3
C807	F-2
C808	F-3
C809	F-2
C810	E-5
C811	E-5
C1002	D-2
C1003	C-2
C1004	C-2
C1005	B-2
C1006	B-2
C1007	B-2
C1008	C-2
C1009	C-2
C1010	C-2
C1011	D-3
C1012	C-2
C1013	C-2
C1014	C-3
C1015	B-3
C1016	C-3
C1017	B-3
C1018	C-3
C1019	C-3
C1020	C-3
C1021	D-3
C1022	C-3
C1023	C-3
C1024	D-3
C1025	E-3
C1026	C-3
C1027	C-3
C1028	E-2
C1029	B-4
C1030	C-4
C1031	C-4
C1034	D-3
C1035	D-3
C1036	C-4
C1037	B-4
C1038	B-4
C1039	D-3
C1040	B-4
C1041	D-2
C1042	C-2
C1043	C-2
C1044	D-2
C1045	D-3
C1046	C-4
C1047	B-4
C1048	B-4
C1049	A-1
C1050	A-1
C1051	A-1
C1052	B-1
C1053	A-1
C1054	A-1
C1055	B-1
C1056	A-1
C1058	A-2
C1059	A-2
C1060	A-2
C1061	A-2
C1062	A-2
C1065	E-4
C1066	E-4
C1067	F-4
C1068	E-5
C1069	F-4
C1070	F-4
C1071	E-4
C1072	E-4
C1073	F-5
C1074	F-4
C1075	D-5
C1076	E-5
C1077	B-4
C1078	B-4
C1079	A-2
C1090	D-5
C1091	E-5
C1301	C-4
C1302	D-3
C1303	D-3
C1304	D-3
C1305	C-3
C1306	D-3
C1307	C-4
C1308	D-3
C1309	D-4
C1310	D-4
C1311	D-4
C1312	D-4
C1313	C-4
C1314	C-4
C1315	C-4
C1316	D-4
C1318	D-4
C1319	D-4
C1320	D-4
C1321	C-4
C1322	C-4
C1323	D-4
C1328	C-5
C1329	C-5
C1330	D-5
C1332	D-5
C1333	D-5
C1337	C-5
C1338	D-5
C1340	C-5
C1341	D-5
C1342	C-5
C1343	C-5
C1420	F-4
C1421	F-4
C1423	F-4
CN007	D-8
CN008	G-3
CN020	A-4
CN021	C-7
CN022	A-5
CN023	G-5
CN024	A-6
CN025	E-6
CN101	A-3
D007	F-2
D702	F-6
FB101	B-3
FB702	F-7
FB703	F-7
FB706	E-6
FB707	C-7
FB771	C-7
FB772	D-5
FB1002	C-4
FB1301	C-5
IC101	B-3
IC401	B-5
IC402	B-6
IC701	F-6
IC702	F-6
IC704	E-7
IC706	D-7
IC771	C-6
IC801	E-4
IC802	E-3
IC803	D-6
IC1001	C-3
IC1002	B-4
IC1003	D-3
IC1004	A-1
IC1005	F-5
IC1006	E-4
IC1007	E-4
IC1008	E-5
IC1009	B-4
IC1010	B-4
IC1012	A-2
IC1301	D-4
IC1411	F-4
L101	B-4
L102	B-4
L401	C-7
L402	C-7
L701	E-6
L702	D-6
L710	F-7
L801	F-2
L802	E-5
L1001	C-3
L1002	B-4
L1003	A-1
L1004	A-2
L1073	C-4
L1301	C-4
L1302	D-4
L1303	D-4
L1304	D-5
Q001	E-2
Q003	E-2
Q004	C-7
Q102	B-4
Q401	C-6
Q402	C-6
Q701	F-7
Q702	F-7
Q801	E-3
Q1001	C-2
Q1002	B-2
Q1003	C-2
Q1004	C-2
Q1005	B-2
Q1006	B-2
Q1007	D-3
Q1008	D-2
Q1009	B-2
Q1010	D-2
Q1011	F-4
Q1014	D-2
Q1015	D-2
Q1016	C-4
Q1024	E-4
Q1025	F-4
Q1301	C-4
Q1302	D-3
Q1303	D-4
Q1304	D-3
Q1305	D-3
R001	E-2
R002	F-2
R003	F-2
R004	F-2
R005	F-2
R006	F-2
R007	C-8
R008	E-2
R009	E-2
R020	B-4
R021	B-4
R022	B-5
R023	B-5
R024	A-6
R103	B-4
R104	B-4
R105	B-3
R106	B-3
R107	B-3
R108	B-3
R109	B-3
R110	B-3
R112	B-3
R127	B-3
R401	B-6
R402	A-5
R403	A-5
R404	B-6
R405	B-6
R406	B-5
R407	B-5
R408	B-5
R409	B-5
R410	B-6
R411	B-6
R412	B-6
R413	B-5
R414	B-5
R415	B-5
R416	B-6
R417	B-6
R418	C-6
R419	B-6
R420	C-6
R421	C-5
R422	C-5
R423	C-5
R424	B-5
R425	A-5
R426	B-7
R427	B-7
R428	B-6
R429	B-7
R430	B-6
R431	B-6
R432	B-6
R433	B-6
R434	B-7
R435	B-6
R436	B-6
R701	F-5
R705	E-7
R707	E-6
R708	E-7
R709	E-6
R710	E-6
R711	D-6
R714	D-6
R715	D-7
R716	D-7
R717	D-7
R718	D-6
R719	D-6
R720	D-6
R721	D-6
R760	E-7
R761	F-7
R762	F-7
R771	C-5
R772	D-6
R773	D-6
R801	E-4
R802	E-4
R803	E-2
R812	E-3
R813	E-4
R814	E-4
R815	E-2
R816	E-2
R818	E-3
R819	E-3
R820	F-3
R822	F-2
R826	F-3
R827	F-3
R828	F-3
R829	F-3
R830	F-3
R831	F-3
R832	F-3
R833	F-3
R835	F-3
R836	F-2
R837	F-3
R838	F-2
R839	F-3
R840	F-3
R841	F-2
R842	F-2
R843	F-2
R850	F-2
R851	F-2
R852	E-2
R853	F-3
R854	F-2
R1001	B-2
R1002	D-3
R1003	B-2
R1004	B-2
R1005	B-2
R1006	D-3
R1007	C-2
R1008	B-2
R1009	B-2
R1010	D-2
R1011	D-3
R1012	B-2
R1013	B-2
R1014	B-2
R1015	F-4
R1016	C-2
R1017	C-2
R1018	D-3
R1019	C-2
R1020	F-4
R1021	C-2
R1022	B-2
R1023	C-2
R1024	C-2
R1025	B-2
R1026	B-2
R1027	B-3
R1028	D-2
R1029	C-4
R1030	C-5
R1031	C-4
R1032	E-3
R1033	D-2
R1034	D-2
R1035	D-3
R1036	D-2
R1037	D-2
R1038	D-2
R1039	E-3
R1040	D-3
R1041	D-3
R1042	C-4
R1043	C-4
R1044	C-4
R1045	C-4
R1046	C-4
R1047	C-4
R1048	B-4
R1049	A-1
R1050	A-1
R1051	B-1
R1052	B-4
R1053	B-4
R1058	B-2
R1059	E-4
R1060	E-4
R1061	E-4
R1062	E-4
R1063	F-5
R1064	F-5
R1065	F-4
R1066	E-4
R1067	E-5
R1068	F-4
R1069	F-4
R1070	D-4
R1071	E-5
R1072	D-5
R1073	E-5
R1074	D-5
R1075	E-5
R1076	B-2
R1077	B-2
R1078	B-4
R1079	D-5
R1080	D-5
R1083	B-3
R1084	B-3
R1090	E-4
R1301	C-4
R1302	C-4
R1304	C-4
R1305	C-3
R1306	D-4
R1307	D-3
R1308	D-3
R1312	C-4
R1313	C-3
R1314	D-4
R1315	D-4
R1316	D-3
R1317	D-3
R1318	D-4
R1319	C-4
R1320	E-4
R1321	E-4
R1322	C-4
R1323	D-4
R1324	D-4
R1325	C-5
R1326	D-5
R1327	C-5
R1328	C-5
R1329	D-5
R1330	C-5
R1333	C-4
R1334	C-4
R1445	F-4
X801	F-4
X1301	D-4
X1401	F-4
X1402	F-4

VC-242D BOARD (SIDE B)

C109	A-14
C120	B-15
C121	B-15
C122	B-15
C123	B-15
C124	B-15
C125	A-15
C126	B-15
C127	B-14
C128	A-14
C301	C-16
C302	C-14
C303	B-15
C304	B-16
C305	D-16
C306	C-16
C307	B-15
C308	B-15
C309	C-16
C310	B-16
C311	D-15
C312	B-16
C313	C-14
C314	C-14
C315	D-14
C316	D-14
C317	B-15
C318	C-14
C319	C-14
C320	B-14
C321	B-14
C322	C-14
C323	C-14
C324	D-14
C325	D-14
C326	D-14
C327	C-14
C328	C-14
C329	A-16
C331	A-16
C332	A-16
C333	A-16
C334	B-16
C335	A-16
C337	A-17
C338	A-17
C339	C-14
C340	C-14
C341	C-14
C342	D-13
C343	D-15
C345	D-15
C346	B-15
C348	B-15
C352	D-16
C353	C-14
C501	B-14
C502	A-14
C503	A-14
C504	B-14
C505	A-13
C506	A-13
C507	C-13
C508	C-13
C509	A-13
C726	E-12
C727	E-12
C728	E-12
C734	E-12
C742	E-11
C745	D-11
C746	D-11
C747	E-11
C749	D-11
C753	D-11
C754	D-12
C901	D-13
C902	D-12
C903	D-13
C904	D-13
C908	E-12
C910	D-12
C911	D-13
C912	D-13
C913	D-13
C914	D-13
C915	D-13
C916	D-13
C917	D-12
C918	D-12
C919	D-12
C920	D-12
C921	D-12
C922	D-13
C926	D-12
C928	D-12
C929	D-12
C930	C-12
C931	C-13
C932	C-13
C933	C-13
C934	C-13
C935	C-13
C936	E-13
C1011	C-11
C1102	C-11
C1103	C-11
C1104	C-12
C1105	C-13
C1106	B-13
C1107	A-12
C1108	A-12
C1109	B-13
C1110	B-13
C1111	B-13
C1112	B-13
C1113	B-13
C1114	B-13
C1115	B-13
C1116	B-13
C1117	B-12
C1118	A-13
C1119	A-13
C1120	B-11
C1121	B-13
C1122	B-10
C1127	A-12
C1128	A-11
C1129	A-11
C1130	A-12
C1131	A-12
C1132	A-12
C1344	E-12
C1401	F-15
C1402	D-11
C1403	C-11
C1404	C-11
C1405	D-11
C1406	D-11
C1407	F-15
C1408	E-15
C1409	D-14
C1410	E-14
C1411	E-14
C1412	E-15
C1413	G-15
C1414	D-15
C1415	E-15
C1416	D-14
C1417	E-15
C1418	F-16
C1419	E-16
C1422	F-13
C1424	E-14
C1425	F-14
C1426	E-14
C1427	D-14
C1428	D-14
C1801	E-12
C1803	F-12
C1804	F-12
C1805	F-12
C1806	F-12
C1807	F-12
C1808	F-12
C1809	E-12
C1810	E-13
C1811	E-13
C1812	F-13
C1813	G-11
C1814	F-13
C1815	G-11
C1816	E-11
C1817	F-13
C1818	F-13
C1819	F-13
C1820	F-12
C1821	F-13
C1822	E-13
C1823	F-13
C1824	F-12
C1825	E-12
C1826	E-12
C1827	F-12
CN002	G-12
CN003	D-11
CN004	G-13
CN006	A-17
CN009	G-15
D001	F-14
D002	F-15
D003	F-15
D004	F-15
D005	F-14
D301	C-14
D302	C-14
D303	D-14
D304	D-14
D701	D-11
D1102	C-10
D1103	C-10
D1104	C-11
D1105	B-11
D1106	C-12
D1110	B-12
D1111	B-13
D1112	A-13
D1113	A-13
D1401	F-14
D1802	G-11
D1803	E-12
D1804	E-11
FB301	D-16
FB302	B-16
FB303	C-14
FB304	A-16
FB305	C-16
FB306	B-15
FB307	D-15
FB501	C-13
FB704	D-11
FB705	D-12
FB901	C-12
FB1101	B-12
FB1401	D-11
FB1402	D-15
FB1403	E-16
FB1404	D-14
FB1405	F-16
FB1406	E-16
FB1407	F-14
FB1408	F-13
FB1409	F-13
FB1801	F-12
IC102	A-15
IC301	C-15
IC302	B-16
IC361	A-16
IC501	B-14
IC502	C-13
IC705	E-12
IC707	D-11
IC903	D-13
IC1101	C-11
IC1102	C-11
IC1103	C-13
IC1104	B-12
IC1105	B-11
IC1401	F-15
IC1402	F-14
IC1403	D-16
IC1404	C-11
IC1405	F-15
IC1406	E-15
IC1407	D-14
IC1408	F-16
IC1409	E-16
IC1410	E-13
IC1412	E-13
IC1802	F-12
IC1803	F-11
L103	B-14
L303	C-15
L304	D-14
L305	B-14
L306	C-14
L307	A-16
L901	C-13
L902	E-12
L1305	E-12
L1801	E-12
L1802	G-11
L1803	F-13
Q301	C-14
Q302	C-14
Q303	C-15
Q304	C-15
Q305	C-14
Q306	C-14
Q307	C-14
Q308	C-15
Q902	E-12
Q903	E-13
Q904	D-13
Q905	D-13
Q906	E-13
Q1101	C-11
Q1102	C-12
Q1103	C-12
Q1104	B-11
Q1105	C-12
Q1106	C-12
Q1107	A-13
Q1108	A-12
Q1109	A-13
Q1110	D-12
Q1111	C-12
Q1112	A-13
Q1113	B-11
Q1114	B-12
Q1115	C-12
Q1116	A-13
Q1401	F-14
Q1402	E-14
Q1403	E-14
Q1404	F-14
Q1405	F-14
Q1801	F-12
R010	D-11
R113	A-15
R114	A-15
R115	B-15
R116	A-15
R117	A-15
R118	A-15
R119	A-15
R120	A-15
R121	A-15
R122	A-15
R123	A-15
R124	A-15
R125	A-14
R126	B-14
R305	C-16
R306	C-15
R307	B-15
R310	C-14
R311	C-14
R312	C-14
R313	C-15
R314	C-14
R315	C-14
R316	C-14
R317	C-14
R318	D-14
R319	D-14
R320	C-14
R321	C-13
R322	C-14
R323	D-14
R324	D-14
R325	D-14
R326	D-15
R327	C-14
R328	C-14
R329	C-14
R331	C-14
R332	C-14
R334	C-14
R335	C-14
R336	C-14
R338	C-14
R340	C-14
R341	C-14
R343	C-14
R351	C-14
R356	C-14
R358	C-14
R360	C-15
R361	A-17
R364	A-17
R367	A-17
R368	A-17
R369	A-17
R370	A-17
R371	A-17
R372	A-17
R377	B-15
R378	D-15
R379	D-15
R380	B-15
R381	B-15
R382	D-15
R383	B-15
R384	E-12
R385	E-12
R501	B-14
R502	B-14
R503	B-14
R504	B-14
R505	B-14
R506	A-14
R507	B-14
R508	B-14
R509	B-14
R510	B-14
R511	B-14
R512	B-14
R513	B-14
R514	B-13
R515	B-13
R516	B-13
R517	B-13
R518	B-13
R519	B-13
R520	B-13
R521	B-13
R522	C-13
R523	C-13
R524	B-13
R525	B-13
R526	B-13
R527	B-13
R528	C-13
R528	B-13
R531	B-13
R532	B-13
R712	E-11
R713	E-11
R722	E-11
R723	E-11
R724	E-11
R725	E-11
R728	D-12
R729	D-11
R730	D-11
R731	D-12
R733	D-11
R734	D-11
R735	E-11
R736	E-11
R737	E-11
R738	E-11
R739	E-11
R740	E-11
R763	D-12
R764	D-11
R904	C-13
R907	E-13
R908	E-13
R909	D-13
R911	D-13
R912	D-13
R916	D-12
R924	D-12
R930	D-13
R932	D-12
R936	D-12
R949	C-12
R953	D-12
R954	C-13
R955	D-13
R956	E-13
R957	E-13
R958	E-13
R1103	C-11
R1104	C-12
R1105	C-12
R1106	B-11
R1107	A-12
R1108	A-12
R1109	C-10
R1110	C-11
R1111	C-12
R1112	B-11
R1113	C-11
R1114	C-12
R1115	B-11
R1116	C-11
R1117	C-12
R1118	C-12
R1119	C-12
R1120	C-12
R1121	C-12
R1122	C-12
R1123	C-11
R1124	C-12
R1125	C-12
R1126	C-12
R1127	C-12
R1128	C-12
R1129	C-12
R1130	C-12
R1131	C-12
R1132	C-12
R1133	C-12
R1134	C-11
R1135	B-12
R1136	B-12
R1137	C-13
R1138	B-11
R1139	B-11
R1140	A-13
R1141	A-13
R1142	A-13
R1143	A-13
R1144	B-11
R1145	B-11
R1146	B-11
R1147	B-11
R1148	B-13
R1149	B-13
R1150	B-13
R1151	B-13
R1152	B-13
R1153	B-11
R1154	B-13
R1155	B-13
R1156	B-13
R1157	B-13
R1158	B-12
R1159	B-12
R1160	B-13
R1161	B-13
R1162	B-13
R1163	B-13
R1164	B-13
R1165	B-13
R1166	B-13
R1167	B-13
R1176	B-12
R1177	B-13
R1178	B-12
R1179	B-11
R1180	B-11
R1181	B-11
R1188	B-12
R1189	B-12
R1191	C-11
R1192	C-11
R1193	C-11
R1194	B-11
R1195	B-11
R1196	A-13
R1197	A-13
R1198	A-12
R1199	A-12
R1200	A-12
R1201	A-12
R1202	A-12
R1203	A-12
R1204	B-12
R1205	A-12
R1206	A-13
R1207	A-12
R1208	A-12
R1209	A-12
R1210	A-12
R1211	A-12
R1212	A-13
R1213	A-13
R1214	A-12
R1215	A-13
R1216	A-12
R1217	A-12
R1218	A-11
R1219	B-12
R1220	A-12
R1221	C-12
R1222	A-12
R1223	A-12
R1224	A-12
R1225	A-12
R1226	A-12
R1227	B-12
R1228	B-13
R1229	B-12
R1230	B-12
R1231	A-13
R1331	E-13
R1332	E-13
R1401	F-15
R1402	F-14
R1403	F-14
R1404	E-14
R1405	E-14
R1406	E-14
R1407	E-14
R1408	E-14
R1409	E-14
R1410	E-14
R1411	F-14
R1412	E-14
R1413	E-14
R1414	F-14
R1415	F-14
R1416	F-14
R1417	E-14
R1418	E-14
R1419	E-14
R1420	E-14
R1421	E-14
R1422	E-13
R1423	E-13
R1424	E-13
R1425	E-13
R1426	E-13
R1427	E-13
R1428	E-13
R1429	E-13
R1430	E-13
R1431	E-13
R1432	E-13
R1433	F-15
R1434	F-15
R1435	F-15
R1436	F-15
R1437	E-15
R1438	E-15
R1439	E-16
R1440	E-16
R1441	E-15
R1442	E-16
R1443	E-13
R1444	E-14
R1446	E-14
R1447	E-13
R1448	F-14
R1449	F-13
R1450	E-13
R1451	F-14
R1452	F-13
R1453	F-14
R1454	F-14
R1455	D-13
R1456	F-14
R1457	F-13
R1801	F-12
R1802	F-12
R1803	F-12
R1804	F-12
R1805	F-12
R1806	E-12
R1807	F-12
R1808	E-12
R1809	E-12
R1810	E-12
R1811	E-12
R1812	E-12
R1814	E-13
R1815	E-13
R1816	G-11
R1818	E-11
R1819	E-13
R1820	F-13
R1821	F-13
R1822	F-13
R1823	F-13
R1824	E-12
R1825	F-12
R1826	E-12
R1827	F-13
R1828	F-13
R1830	E-12
R1831	E-12
R1832	F-12
R1833	E-12
X301	B-15
X501	A-14
X701	D-11
X1102	A-11

JK-190 BOARD (SIDE A)

CN300	A-4	J300	D-4
		J301	F-4
D301	E-4	J302	F-1
D303	E-3	J303	D-1
D306	E-4		
		R300	E-3
FB300	E-4	R321	A-3
FB301	E-4		

JK-190 BOARD (SIDE B)

C301	B-7	R301	C-7
C302	B-7	R302	C-7
C303	B-7	R303	C-7
C304	B-7	R304	B-7
		R305	A-7
CN301	A-9	R306	B-7
		R307	B-7
D300	A-7	R308	B-7
D302	B-7	R309	C-7
D304	C-7	R310	C-9
D305	A-7	R311	E-8
D307	B-7	R312	E-9
D308	C-7	R313	E-8
D309	D-9	R314	E-9
D310	D-8	R315	D-9
D311	C-9	R316	D-8
D312	E-9	R317	D-9
D313	E-9	R318	D-9
D314	E-8	R319	D-9
		R320	E-9
L301	B-7	R322	B-7
L302	B-7	R323	C-7

CK-093 BOARD (SIDE A)

BT250	C-3	D253	A-2
		D254	A-2
CN250	E-3	D255	A-2
CN252	A-5		
CN253	D-4	R250	F-4
CN254	A-2	R251	C-1
CN255	F-1	R252	F-4
CN256	F-2	R253	F-3
		R254	F-4

CK-093 BOARD (SIDE B)

CN251	B-6	R267	E-8
		R268	E-9
D250	F-9	R269	B-10
D251	F-8		
D252	B-10	S250	D-7
		S251	E-7
R255	F-7	S252	E-9
R256	E-9	S253	C-7
R257	D-8	S254	E-9
R258	C-8	S255	D-8
R259	E-10	S256	B-10
R260	D-9	S257	E-8
R261	C-8	S258	D-9
R262	E-10	S259	E-10
R263	D-10	S260	E-10
R264	C-8	S261	E-7
R265	E-9	S262	E-8
R266	B-10	S263	B-9

PD-126 BOARD (SIDE A)

C2101	C-1	Q2108	B-1
C2102	D-1	Q2109	B-3
C2103	D-1	Q2111	C-2
C2104	C-1	Q2112	B-3
C2105	C-1	Q2181	C-3
C2106	D-1	Q2182	D-3
C2107	C-1	Q2183	B-3
C2108	D-1		
C2109	D-1	R2109	D-1
C2110	C-1	R2110	D-1
C2111	C-2	R2111	D-1
C2112	D-2	R2112	C-1
C2113	C-2	R2113	B-1
C2114	D-2	R2114	D-2
C2115	D-3	R2115	C-2
C2116	C-2	R2116	C-2
C2117	C-2	R2117	C-2
C2118	D-2	R2118	C-2
C2119	D-3	R2119	C-2
C2120	D-2	R2122	C-2
C2121	C-2	R2123	C-3
C2122	C-2	R2124	C-2
C2123	C-3	R2125	C-2
C2124	C-3	R2126	C-3
C2125	C-3	R2127	D-3
C2126	B-3	R2128	C-3
C2127	C-3	R2129	C-2
C2128	B-3	R2134	C-3
C2129	B-2	R2135	C-2
C2130	D-1	R2136	C-2
C2131	C-2	R2137	C-3
C2132	C-1	R2138	C-3
C2133	B-2	R2139	B-2
C2134	D-1	R2140	B-2
C2135	D-1	R2141	B-2
C2136	C-1	R2142	B-2
C2137	D-2	R2144	C-3
C2138	C-3	R2145	C-3
C2181	C-3	R2146	B-1
C2182	B-3	R2147	C-3
C2183	C-3	R2148	C-3
C2184	C-3	R2149	B-2
C2185	C-3	R2150	B-3
C2186	D-3	R2151	C-2
		R2152	B-3
CN2100	C-1	R2153	B-3
CN2101	B-1	R2154	B-3
CN2103	B-3	R2155	A-3
CN2104	B-2	R2157	B-3
CN2105	D-3	R2158	C-3
		R2159	B-3
D2101	C-1	R2160	B-3
D2102	C-2	R2161	B-3
D2103	B-2	R2162	B-2
D2104	B-2	R2163	C-2
D2105	B-3	R2165	B-3
D2181	A-3	R2166	B-3
		R2168	D-1
IC2101	D-2	R2169	D-1
IC2103	B-2	R2170	C-2
		R2171	D-3
L2101	C-1	R2172	B-3
L2102	C-1	R2173	D-1
L2103	D-2	R2174	D-1
L2104	C-2	R2175	C-1
L2105	B-1	R2176	C-2
L2181	C-3	R2177	B-3
L2182	C-3	R2178	C-2
		R2179	C-2
Q2101	D-3	R2180	C-2
Q2102	C-3	R2181	D-3
Q2103	C-3	R2182	D-3
Q2104	C-3	R2183	A-4
Q2105	C-2	R2184	B-2
Q2106	B-2	R2185	D-2
Q2107	B-1	R2186	D-3

LA-026 BOARD (SIDE A)

C095	D-4
C140	C-2
C141	A-3
C142	B-3
C143	A-3
C144	B-3
C145	C-4
C146	C-3
C147	C-3
C148	C-2
C149	C-3
C150	C-4
C151	C-4
C152	B-1
C153	C-3
C154	B-1
C155	B-3
C156	C-3
C157	B-3
C158	C-3
C159	C-2
C160	B-3
C161	B-4
C162	A-3
C163	A-2
C164	B-3
C165	A-3
C166	C-3
C167	B-4
C168	A-4
C170	C-3
CN050	A-1
CN052	A-2
CN053	E-4
CN054	A-4
CN055	D-2
CN056	B-5
D140	B-3
FB140	A-3
IC140	B-1
IC141	C-3
IC142	C-2
IC143	B-2
IC144	B-4
L072	D-5
L140	B-1
L141	B-2
L142	C-3
L143	C-3
Q050	B-4
Q072	D-4
Q075	D-5
Q077	C-5
Q140	D-3
Q141	D-3
Q142	B-3
Q143	C-3
R050	D-3
R051	D-3
R052	D-3
R053	D-3
R054	D-3
R055	D-3
R060	A-1
R065	C-5
R066	E-5
R067	D-5
R112	D-4
R114	D-5
R118	C-5
R120	C-5
R140	D-3
R141	C-3
R147	B-3
R148	A-3
R149	B-3
R150	B-3
R151	C-3
R152	C-4
R153	C-3
R154	C-3
R155	C-3
R156	C-3
R157	C-3
R158	C-3
R159	C-4
R160	C-3
R161	C-3
R162	C-3
R163	C-3
R164	C-4
R165	C-3
R166	C-3
R167	C-4
R168	C-2
R169	C-2
R170	C-2
R171	A-3
R172	A-3
R173	A-3
R174	A-3
R177	B-3
R178	A-2
R179	A-4
R180	A-4
R181	A-4
R182	A-4
R185	B-4
R186	A-3
R187	B-3

LA-026 BOARD (SIDE B)

C070	A-8
C071	B-9
C072	B-8
C073	B-9
C074	B-8
C075	B-9
C076	B-7
C077	B-8
C078	C-7
C079	C-7
C080	B-8
C081	C-9
C082	C-8
C083	C-9
C084	C-8
C085	C-8
C086	C-9
C087	C-9
C088	C-8
C089	C-9
C090	C-9
C091	C-8
C092	C-8
C093	C-8
C094	C-8
C096	C-8
C097	C-8
C098	B-8
C099	B-8
C100	C-8
C200	B-10
C201	B-10
C202	B-10
C203	B-9
C204	B-10
C205	B-9
C206	C-10
C207	C-9
C208	C-10
C209	C-9
C210	C-10
C211	C-9
C212	C-10
C213	C-9
C214	C-10
C215	C-10
CN051	E-7
D070	B-8
IC070	B-9
IC071	B-8
IC072	B-7
IC073	B-8
IC074	C-8
IC075	C-8
IC076	C-8
IC200	C-10
L070	C-7
L071	C-8
L073	C-8
L200	C-10
Q070	B-7
Q071	B-7
Q073	D-8
Q074	D-8
Q076	C-7
Q078	C-7
Q200	C-10
Q201	C-9
R056	E-8
R057	E-8
R058	E-8
R061	D-6
R062	D-6
R063	D-6
R064	D-6
R070	B-9
R071	B-9
R072	B-8
R073	B-8
R074	B-8
R075	B-8
R076	B-7
R077	B-9
R078	B-9
R079	B-7
R080	B-8
R081	B-9
R082	B-8
R083	B-8
R084	B-7
R085	B-7
R086	C-7
R087	C-7
R088	B-8
R089	B-8
R090	C-8
R091	C-9
R092	C-8
R093	C-9
R094	C-9
R095	C-8
R096	C-8
R097	C-9
R098	C-8
R099	C-9
R100	C-8
R101	C-8
R102	C-8
R103	C-9
R104	C-9
R105	C-8
R106	B-8
R107	B-8
R108	B-8
R109	B-8
R110	D-8
R111	D-8
R113	C-7
R115	C-7
R116	C-7
R117	C-7
R119	C-7
R142	A-10
R143	A-10
R144	A-9
R145	A-10
R146	A-10
R200	B-10
R201	B-9
R202	B-9
R203	B-10
R204	C-10
R205	C-9
R206	C-10
R207	C-10
R208	C-9
R209	C-9
R210	C-9
R211	C-10

SE-108 BOARD (SIDE A)

SE600	B-3
SE601	B-2
SE602	B-2
SE603	B-3

SE-108 BOARD (SIDE B)

C600	B-5
C601	B-5
CN600	B-5
L600	B-5

MS-049 BOARD (SIDE A)

CN775	C-3
R1001	C-3
R1002	C-3
R1003	C-3
R1004	C-3

MS-049 BOARD (SIDE B)

CN776	B-7

KP-010 BOARD (SIDE A)

D550	A-2
S550	A-3

KP-010 BOARD (SIDE B)

CN550	B-6

MK-014 BOARD (SIDE A)

CN001	B-1
D004	B-1
R001	C-1
R007	B-1
S005	C-2

MK-014 BOARD (SIDE B)

D003	B-4
R002	A-3
R003	B-3
R004	C-3
R005	C-3
R006	C-3
S001	A-3
S002	B-3
S003	C-3
S004	C-3

FK-076 BOARD (SIDE A)

CN500	D-1
CN501	D-2
D512	D-6
R500	D-6
R501	D-6
R502	E-5
R503	E-6
R504	E-2
R505	E-4
R506	E-4
R507	E-2
R508	E-4
R509	E-4
R510	E-5
R511	E-4
R512	D-4
R513	C-5
R514	E-3
R515	C-2
R516	E-2
R517	D-6

FK-076 BOARD (SIDE B)

D500	B-5
D501	A-5
D502	B-4
D503	A-4
D504	B-4
D505	A-3
D506	B-3
D507	A-3
D508	B-3
D509	B-3
D510	A-2
D511	B-2
S500	A-5
S501	A-2
S502	A-4
S503	A-3
S504	A-3
S505	A-5
S506	A-4
S507	A-3
S508	A-2
S509	B-3
S510	B-4
S511	B-2

XD-001 BOARD (SIDE A)

C406	A-2
C407	A-2
C408	B-2
C409	B-3
C411	B-2
C412	B-2
CN401	A-1
D401	A-2
D402	B-2
IC400	A-2
Q401	A-2
Q405	A-3
Q406	A-3
Q407	A-3
Q408	A-2
Q409	B-2
Q410	B-3
R401	A-2
R408	A-2
R410	A-2
R411	A-3
R412	A-3
R413	A-3
R414	A-2
R415	A-2
R416	A-2
R417	B-2
R418	B-3
R420	B-2
R421	B-3
R422	B-3
R423	B-3
R425	A-1

XD-001 BOARD (SIDE B)

C400	A-4
C401	A-4
C402	A-4
C403	B-4
C404	B-4
C405	B-4
C410	B-5
C413	B-5
C414	B-6
C415	B-6
C416	B-6
C417	A-6
C418	A-6
C419	A-5
C420	A-5
IC401	B-4
L400	B-5
L401	B-5
L402	B-6
Q402	B-6
Q403	A-6
Q404	A-4
Q411	B-5
R402	B-6
R404	B-4
R405	B-4
R406	B-4
R407	B-4
R409	A-4
R419	B-5

XS-001 BOARD (SIDE A)

CN101	D-3
CN102	D-2
S100	E-3
S102	E-2
S103	D-2
S104	D-4
S105	E-5

XS-001 BOARD (SIDE B)

CN100	B-1
CN103	A-3

XM-001 BOARD (SIDE A)

C208	C-1
C209	C-1
C210	D-1
C211	C-1
C212	D-1
C226	C-1
C228	C-1
C308	A-1
C309	A-1
C310	B-1
C311	A-1
C312	B-1
C326	A-1
C328	A-1
CN201	D-1
CN301	B-1
L203	C-1
L303	A-1
R211	C-1
R239	C-1
R240	D-1
R311	A-1
R339	B-1
R340	B-1

XM-001 BOARD (SIDE B)

C200	D-6
C201	D-6
C202	D-7
C203	D-7
C204	D-6
C205	D-6
C206	D-7
C207	C-7
C214	C-5
C216	C-5
C217	C-5
C218	C-6
C219	C-6
C220	C-5
C221	C-6
C222	C-6
C223	C-6
C224	C-7
C225	C-7
C230	C-7
C231	C-7
C232	C-7
C300	B-6
C301	B-6
C302	B-7
C303	B-7
C304	B-6
C305	B-6
C306	B-7
C307	A-7
C313	B-6
C314	B-5
C315	B-5
C316	A-5
C317	A-5
C318	A-6
C319	A-6
C320	A-5
C321	A-5
C322	A-6
C323	A-6
C329	A-7
C330	A-7
C331	A-7
C332	A-7
C334	A-7
CN200	B-5
CN300	C-5
D001	B-6
D002	B-6
D003	B-6
D004	B-6
D200	D-6
D201	D-6
D202	D-6
D203	D-6
IC201	C-6
IC202	C-7
IC203	C-7
IC300	B-5
IC301	A-6
IC302	A-7
IC303	A-7
L200	D-6
L201	D-7
L202	D-7
L300	B-6
L301	B-7
L302	B-7
Q201	C-7
Q303	A-7
R200	D-7
R201	C-7
R202	D-7
R203	D-7
R204	D-7
R205	D-7
R206	D-7
R207	D-7
R208	D-7
R209	D-7
R210	D-7
R212	C-6
R213	C-6
R215	C-5
R216	C-5
R217	D-6
R218	D-6
R219	D-6
R220	D-6
R221	C-6
R222	C-6
R223	C-6
R224	C-5
R225	C-5
R226	C-6
R227	C-5
R229	C-7
R230	C-7
R231	C-7
R232	C-7
R233	C-7
R234	C-7
R235	D-6
R236	D-7
R237	C-7
R241	C-7
R242	C-7
R300	B-7
R301	B-7
R302	B-7
R303	B-7
R304	B-7
R305	B-7
R306	B-7
R307	B-7
R308	B-7
R309	B-7
R310	B-7
R312	A-6
R313	A-6
R314	B-6
R315	A-5
R316	A-5
R317	B-6
R318	B-6
R319	B-6
R320	B-6
R321	A-6
R322	A-6
R323	A-6
R324	A-5
R325	A-5
R326	A-6
R327	A-5
R328	A-7
R329	A-7
R330	A-7
R331	A-7
R332	A-7
R333	B-6
R334	A-7
R335	A-7
R336	A-7
R337	A-7
R338	B-7

LB-065D BOARD (SIDE A)

C201	A-2
C202	A-1
C203	A-1
CN201	A-1
R202	A-1
R203	A-1
R206	A-1
R208	A-1
T200	C-1

LB-065D BOARD (SIDE B)

C200	A-4
CN200	A-4
D200	B-4
D201	C-4
IC200	A-4
L200	A-3
L201	A-3
ND200	C-4
Q200	A-4
R200	A-4
R201	A-3
R204	A-4
R205	A-3
R207	A-3

HL-011 BOARD (SIDE A)

C1701	A-1
CN1701	A-2
CN1702	B-1
CN1703	B-3
D1701	B-1
IC1701	A-1
R1701	B-1
R1702	B-1
R1703	B-1
R1704	A-1

MA-386D BOARD (SIDE A)

C1109	D-10
CN100	D-1
CN1102	D-2
CN1103	D-10
CN1106	D-4
D1104	D-5
D1105	D-8
D1106	D-9
D1107	D-10
D1108	D-10
D1109	D-10
D1110	D-10
IC1102	D-8
Q1104	D-10
R1121	D-9
R1122	D-10
R1123	D-10
R1124	D-10
R1125	D-10
R1126	D-10
R1127	C-10
R1128	D-10
R1129	D-10
R1130	D-10
R1136	D-9
R1156	C-1
R1157	C-1
R1163	C-2
R1166	C-2
S1100	D-9

MA-386D BOARD (SIDE B)

C1106	B-1
C1107	B-1
C1150	A-3
C1151	B-2
C1152	B-2
C1153	A-3
C1154	A-3
C1155	B-3
C1156	A-3
C1157	A-2
C1158	A-3
C1159	B-3
C1160	B-2
C1161	A-3
C1162	A-3
C1163	B-3
C1164	B-3
C1165	A-3
C1166	B-3
C1167	A-3
C1168	A-2
C1169	B-3
C1170	A-2
C1171	A-3
C1172	B-3
C1173	B-4
C1174	B-3
C1175	A-3
C1176	A-4
C1177	A-4
C1178	B-3
C1179	A-3
C1180	B-3
C1181	A-4
C1182	A-4
C1183	A-3
C1184	A-4
C1185	A-2
C1186	A-2
C1187	B-4
C1188	A-4
CN1101	A-1
D1111	A-2
D1112	B-2
D1116	A-2
IC1150	A-3
L1150	A-4
R1101	A-1
R1102	B-2
R1103	B-1
R1104	B-1
R1105	B-2
R1131	B-1
R1152	A-2
R1153	A-2
R1154	A-3
R1155	A-2
R1158	B-2
R1159	A-3
R1160	A-3
R1161	B-3
R1162	A-2
R1164	A-2
R1165	B-3
R1167	A-3
R1168	B-4
R1169	A-2
R1170	A-3
R1171	A-4
R1172	B-3
R1173	A-4
R1174	A-3
R1175	A-3
R1176	A-4
R1177	B-4
R1178	A-4
R1179	A-4
R1180	B-3
R1181	B-3
R1182	A-3

DD-138D BOARD (SIDE A)

C300	A-4
C306	A-4
C308	A-2
C310	A-2
C313	A-3
C314	A-3
C316	A-3
C322	B-1
C323	A-2
C324	B-2
C326	A-1
C339	A-1
C346	B-2
C347	C-2
C349	B-2
C350	B-1
C351	C-4
C352	C-4
C354	C-4
C356	C-4
C357	B-4
C358	B-4
C359	C-4
C361	C-5
C364	E-4
C365	D-4
C369	D-4
C370	D-4
C375	B-1
C376	B-3
CN300	A-4
CN301	A-4
D300	A-3
D301	B-4
D302	A-3
D303	A-3
D304	A-3
D305	A-1
D306	A-2
D307	B-1
D308	A-2
D309	B-2
D311	B-2
D312	B-2
D313	B-1
F300	A-3
F301	A-3
F302	A-2
F303	A-2
F304	A-3
F305	A-3
L300	B-3
L301	C-3
L302	C-2
L303	C-3
L304	C-3
L305	C-3
L306	C-4
L307	C-4
L308	C-4
L309	D-4
L312	D-4
L314	D-4
L315	D-4
L317	D-4
L318	D-4
L319	B-4
L451	B-4
L452	B-3
L453	B-4
LF300	B-4
Q300	B-3
Q301	A-3
Q302	A-2
Q303	A-2
Q304	A-3
Q305	B-1
Q306	A-2
Q307	A-2
Q308	B-2
Q316	A-2
Q326	E-4
Q327	D-4
Q328	E-4
Q331	D-4
Q332	D-4
Q336	E-4
Q337	D-4
R300	B-4
R301	B-4
R302	B-4
R303	A-3
R304	A-4
R306	A-3
R310	B-2
R311	B-2
R346	B-2
R347	B-2
R358	E-4
R359	D-4
R361	E-4
R362	D-4
R366	E-4
R367	E-4
R368	E-4
R369	D-4
R370	D-4
R371	D-4
R380	D-4
R395	B-2
R396	B-2
R398	B-2
R400	B-2
T300	A-1
T301	B-2

DD-138D BOARD (SIDE B)

C301	A-8
C302	A-8
C303	A-8
C304	A-8
C305	A-8
C307	A-9
C309	A-9
C311	A-8
C312	A-9
C315	A-8
C317	B-9
C318	B-9
C319	B-8
C320	B-9
C321	B-8
C325	B-9
C327	B-9
C328	B-8
C329	B-8
C330	B-8
C331	B-8
C332	B-7
C333	C-8
C334	B-7
C335	C-7
C336	C-7
C337	C-7
C338	A-7
C340	B-7
C341	B-8
C342	C-7
C343	C-7
C344	C-8
C345	C-8
C348	A-7
C353	C-6
C355	C-6
C360	C-6
C362	A-6
C363	C-6
C366	D-6
C367	D-6
C368	A-7
C371	D-5
C372	D-6
C373	C-5
C450	B-6
C451	A-7
C452	A-7
C453	A-6
C454	B-7
C455	A-9
C456	A-6
C457	B-6
C458	A-6
CN450	C-6
D314	A-6
D315	C-6
D316	A-6
IC300	A-8
IC301	A-7
IC450	A-7
L310	D-6
L311	D-6
L313	D-6
L316	D-6
Q309	C-8
Q310	B-7
Q311	C-7
Q312	C-7
Q313	C-7
Q314	C-7
Q315	A-9
Q317	A-9
Q318	C-8
Q319	B-7
Q320	C-7
Q321	C-7
Q322	C-7
Q323	C-7
Q324	A-9
Q325	D-6
Q329	A-6
Q333	E-6
Q334	D-6
Q335	E-6
Q338	D-6
Q339	A-6
Q340	A-7
Q341	A-7
Q344	D-6
Q345	D-6
Q348	D-6
Q349	D-6
Q351	D-6
Q450	B-7
R305	A-8
R307	A-8
R308	A-8
R309	A-8
R312	A-8
R313	A-8
R314	A-8
R315	A-8
R316	A-8
R317	A-9
R318	A-7
R319	A-8
R320	A-9
R321	A-9
R322	A-9
R323	A-9
R324	A-9
R325	A-9
R326	B-9
R327	B-9
R328	A-7
R329	B-7
R330	B-9
R331	B-9
R332	A-7
R333	B-9
R334	B-9
R335	B-9
R336	A-9
R337	B-9
R338	B-9
R339	B-9
R340	B-9
R341	A-9
R342	B-8
R343	B-8
R344	B-8
R345	B-8
R348	B-8
R349	B-8
R350	A-9
R351	A-9
R352	A-8
R353	A-8
R354	A-8
R355	D-6
R356	D-6
R357	B-8
R360	E-6
R363	A-6
R364	A-6
R365	D-6
R372	D-6
R373	D-6
R374	D-6
R375	B-8
R376	D-6
R377	B-8
R378	D-6
R379	C-6
R381	D-6
R382	A-7
R383	A-7
R384	A-7
R385	A-7
R386	A-7
R387	B-8
R388	D-6
R389	D-6
R390	D-6
R391	D-5
R392	D-6
R393	B-6
R394	B-6
R397	A-8
R399	B-6
R401	A-6
R450	A-7
R451	A-6
R452	B-6
R453	A-6
R454	A-6
R455	A-6
R456	B-6
R457	B-7

SECTION 5
ADJUSTMENTS

1. Before starting adjustment

EVR Data Re-writing Procedure When Replacing Board

The data that is stored in the repair board, is not necessarily correct.
Perform either procedure 1 or procedure 2 or procedure 3 when replacing board.

Procedure 1

Save the EVR data of the machine in which a board is going to be replaced. Download the saved data after a board is replaced.

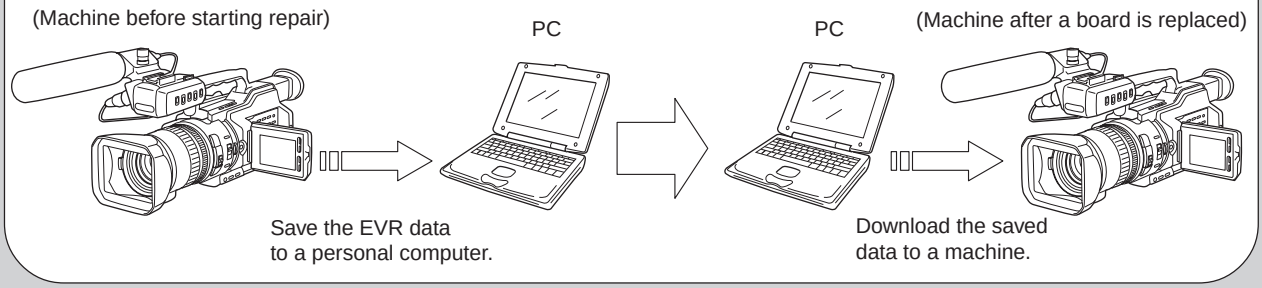

Procedure 2

Remove the EEPROM from the board of the machine that is going to be repaired. Install the removed EEPROM to the replaced board.

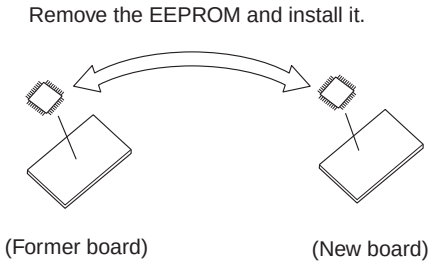

Procedure 3

When the data cannot be saved due to defective EEPROM, or when the EEPROM cannot be removed or installed, save the data from the same model of the same destination, and download it.

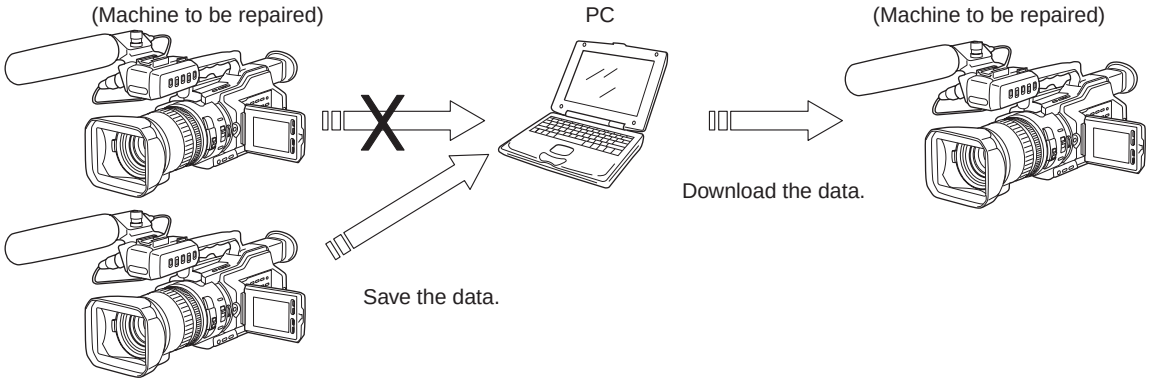

After the EVR data is saved and downloaded, check the respective items of the EVR data.
(Refer to page 5-3 for the items to be checked.)

1-1. Adjusting items when replacing main parts and boards.

• Adjusting items when replacing main parts

When replacing main parts, adjust the items indicated by ● in the following table.

Adjustment Section	Adjustment	Replaced parts																										
		Block replacement											Parts replacement															
		Lens device	Prism assy (Including 3 CCD imagers)	VAP unit	Mechanism deck (Note 1)	EVF block LCD902 (LCD panel)	LCD block LCD901 (LCD panel)	LCD block ND901 (Fluorescent tube)	LCD block Inverter unit	Control switch (CF-4980)	Mechanism deck M901 (Drum motor) (Note 1)	Mechanism deck M902 (Capstan motor) (Note 1)	FP-594 board H902 (T reel FG sensor)	SE-108 board SE600 to 603 (PITCH/YAW sensor)	PD-126 board IC2101 (RGB driver (LCD))	PD-126 board IC2103 (Timing generator (LCD))	LB-065D board ND200 (Fluorescent tube (EVF))	VC-242D boardIC1802 (RGB driver (EVF))	VC-242D boardIC1803 (Timing generator (EVF))	VC-242D boardIC705, X701 (Timing generator)	VC-242D boardIC704 (S/H, AGC)	VC-242D boardIC706 (A/D converter)	VC-242D boardIC802 (Camera micro processor)	VC-242D boardIC1301 (LINE IN/OUT amp)	VC-242D boardIC301 (DV signal process)	VC-242D boardIC101 (EQ, A/D CONV., PLL)	VC-242D boardIC102 (REC/PB amp)	VC-242D boardIC803 (EVR)
Initialization of A, B, C, D, E, F, 8 page data	Initialization of C, D, 8 page data																											
	Initialization of A page data																											
	Initialization of B page data																											
	Initialization of E, F page data																											
	Modification of E page data																						●					
Camera	27MHz origin oscillation adj.																			●								●
	Zoom key center adj.									●																		
	HALL adj.	●	●																									●
	Offset adj.		●																		●	●						●
	Flange back adj.	●	●																									
	Pre-white balance data input	●	●																		●	●						●
	AWB standard data input	●	●																		●	●						
	MAX GAIN adj.	●	●																		●	●						●
	LV standard data input	●	●																		●	●						
	White balance ND filter 1 compensation	●	●																		●	●						
	White balance ND filter 2 compensation	●	●																		●	●						
	Auto white balance adj.	●	●																		●	●						
	Color reproduction adj. (ND filter OFF)	●	●																		●	●						
	Color reproduction adj. (ND filter 1)	●	●																		●	●						
	Color reproduction adj. (ND filter 2)	●	●																		●	●						
	Steady shot adj.			●										●														
EVF	VCO adj.																		●									
	Bright adj.																	●										
	Contrast adj.																	●							●			
	Backlight consumption current adj.																●											
LCD	VCO adj.															●												
	Bright adj.														●													
	Black limit adj.														●													
	Contrast adj.														●										●			
	Center level adj.														●													
	V COM adj.						●								●													
	White balance adj.						●	●	●						●													
System control	Serial No. input																											
	Battery end adj.																											
Servo, RF	CAP FG duty adj.				●							●																
	T reel FG duty adj.				●								●															
	Switching position adj.				●						●																	
	AGC center level adj.				●						●															●	●	
	APC & AEQ adj.				●						●															●	●	
	PLL f_0 & LPF f_0 adj.				●						●															●	●	
Video	Chroma BPF f_0 adj.																							●				
	S VIDEO OUT Y level adj.																							●	●			
	S VIDEO OUT Cr, Cb level adj.																							●	●			
Mechanism	Tape path adj.				●						●	●	●															

Table. 5-1-1(1).

• Adjusting items when replacing a board or EEPROM

When replacing a board or EEPROM, adjust the items indicated by ● in the following table.

Adjustment Section	Adjustment	Board replacement									
		CD-252 board (COMPLETE)	FP-594 board (COMPLETE)	VC-242D board (COMPLETE)	SE-108 board (COMPLETE)	PD-126 board (COMPLETE)	LB-065D board (COMPLETE)	VC-242D board IC801 (EEPROM)	VC-242D board IC502 (EEPROM)	VC-242D board IC1406 (EEPROM)	VC-242D board IC1105 (EEPROM) (Note 2)
Initialization of A, B, C, D, E, F, 8 page data	Initialization of C, D, 8 page data			●					●		
	Initialization of A page data			●							●
	Initialization of B page data			●						●	
	Initialization of E, F page data			●				●			
	Modification of E page data			●				●			
Camera	27MHz origin oscillation adj.			●				●			
	Zoom key center adj.			●				●			
	HALL adj.			●				●			
	Offset adj.	●		●				●			
	Flange back adj.	●		●				●			
	Pre-white balance data input	●		●				●			
	AWB standard data input	●		●				●			
	MAX GAIN adj.	●		●				●			
	LV standard data input	●		●				●			
	White balance ND filter 1 compensation	●		●				●			
	White balance ND filter 2 compensation	●		●				●			
	Auto white balance adj.	●		●				●			
	Color reproduction adj. (ND filter OFF)	●		●				●			
	Color reproduction adj. (ND filter 1)	●		●				●			
	Color reproduction adj. (ND filter 2)	●		●				●			
	Steady shot adj.			●	●			●			
EVF	VCO adj.			●					●		
	Bright adj.			●					●		
	Contrast adj.			●					●		
	Backlight consumption current adj.			●			●		●		
LCD	VCO adj.			●		●			●		
	Bright adj.			●		●			●		
	Black limit adj.			●		●			●		
	Contrast adj.			●		●			●		
	Center level adj.			●		●			●		
	V COM adj.			●		●			●		
	White balance adj.			●		●			●		
System control	Serial No. input			●					●		
	Battery end adj.			●					●		
Servo, RF	CAP FG duty adj.			●					●		
	T reel FG duty adj.		●	●					●		
	Switching position adj.			●					●		
	AGC center level adj.			●					●		
	APC & AEQ adj.			●					●		
	PLL f_0 & LPF f_0 adj.			●					●		
Video	Chroma BPF f_0 adj.			●					●		
	S VIDEO OUT Y level adj.			●					●		
	S VIDEO OUT Cr, Cb level adj.			●					●		
Mechanism	Tape path adj.		●								

Table. 5-1-1(2).

Note1: When replacing the following parts, reset the HRS METER data (page: A, address: 00 to 13) to “00”.
(Refer to “HRS METER (Hours meter)” of “5-4. SERVICE MODE”)
- Mechanism deck
- Drum assembly
- Capstan motor

And when replacing the following parts, reset the data of page: 2, address: A2 to A4 to “00”. (Refer to “Record of Use check” of “5-4. SERVICE MODE”)
- Mechanism deck
- Drum assembly

Note2: When replacing the IC1105 by a user’s having forgotten a password, copy the HRS METER data.
(Refer to “HRS METER (Hours meter)” of “5-4. SERVICE MODE”)

5-1. CAMERA SECTION ADJUSTMENT

1-1. PREPARATIONS BEFORE ADJUSTMENT (CAMERA SECTION)

1-1-1. List of Service Tools

• Oscilloscope • Color monitor • Vectorscope
• Regulated power supply • Digital voltmeter

Ref. No.	Name	Parts Code	Usage
J-1	Filter for color temperature correction (C14)	J-6080-058-A	Auto white balance adjustment/check White balance adjustment/check
J-2	ND filter 1.0	J-6080-808-A	White balance check
	ND filter 0.3	J-6080-818-A	White balance check (2 sheets used)
J-3	Pattern box PTB-450	J-6082-200-A	
J-4	Color chart for pattern box	J-6020-250-A	
J-5	Adjustment remote commander (RM-95 upgraded) (Note1)	J-6082-053-B	
J-6	Siemens star chart	J-6080-875-A	For checking the flange back
J-7	Clear chart for pattern box	J-6080-621-A	
J-8	CPC-13 jig	J-6082-443-A	For adjusting the video section For adjusting the viewfinder
J-9	Extension cable (50P, 0.5mm)	J-6082-496-A	For extension between the CD-254 board (CN100) and the VC-242D board (CN025)
J-10	Mini pattern box	J-6082-353-B	For adjusting the flange back
J-11	Camera table	J-6082-384-A	For adjusting the flange back
J-12	Cleaning fluid	Y-2031-001-0	
J-13	Wiping cloth	7-741-900-53	
J-14	Super fine applicator (made by NIPPON APPLICATOR (P752D))	—	
J-15	Mirror (Small oval type)	J-6080-840-A	
J-16	Screwdriver for tape path	J-6082-026-A	Tape path for adjusting tape guide
J-17	Torque driver	J-9049-330-A	
J-18	TG1 adjustment jig	J-6082-420-A	FWD position adjustment
J-19	Mode selector conversion board (C)	J-6082-417-A	
J-20	Tracking tape (XH2-1A1)(NTSC/PAL)	8-967-999-03	
J-21	Mini DV torque cassette	J-6082-360-A	For FWD torque, REV torque and FWD back tension
J-22	Mode Selector Ⅱ	J-6082-282-A	For all operating
J-23	Mode Selector Ⅱ ROM	J-6082-314-D	Corresponds to C mechanism (Note 2)
J-24	Bending stick	J-6082-419-A	

Note1: If the micro processor IC in the adjustment remote commander is not the new micro processor (UPD7503G-C56-12), the pages cannot be switched. In this case, replace with the new micro processor (8-759-148-35).

Note 2: ROM for version upgrading to allow use of the mode selector II with the C mechanism.

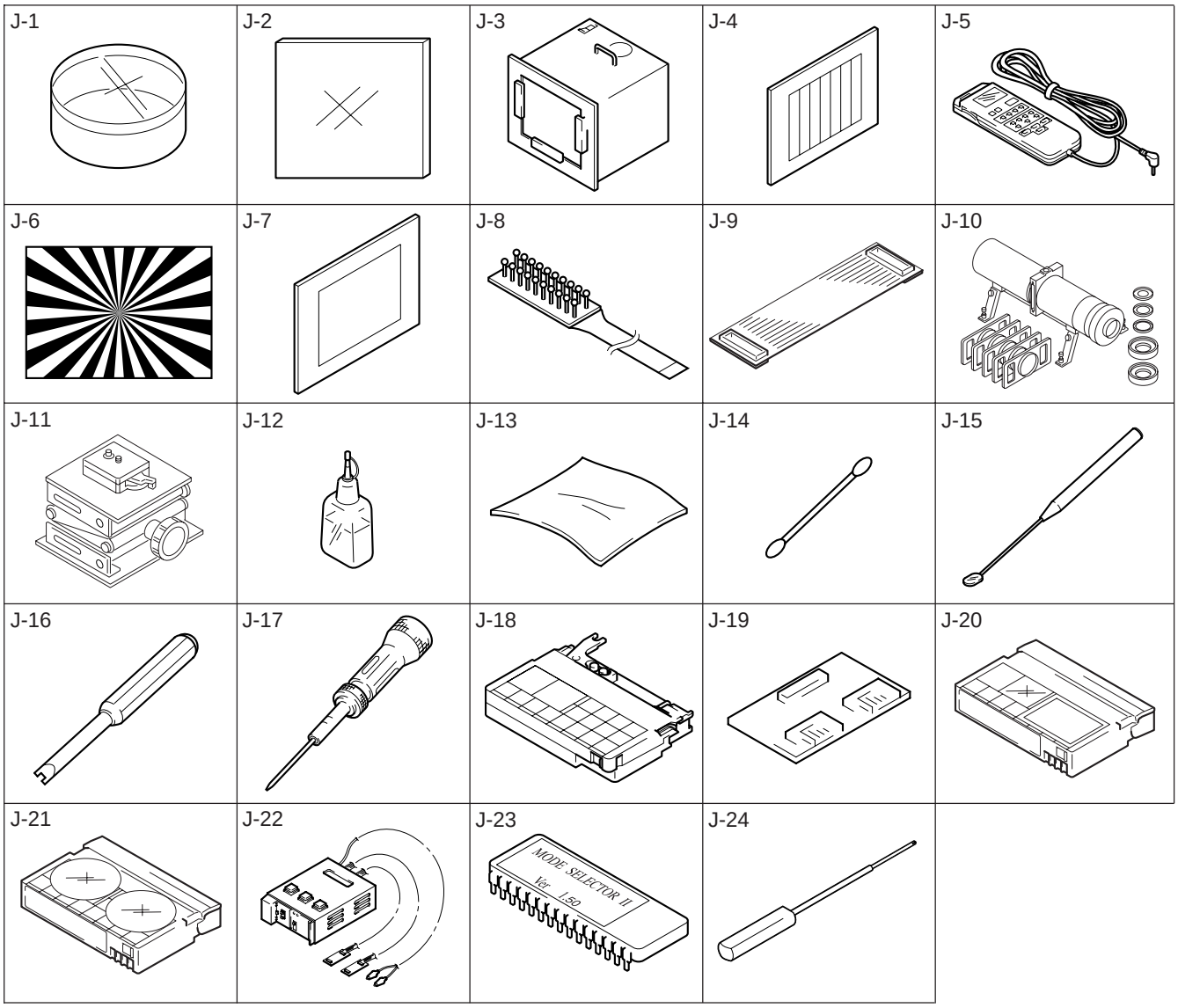
J-1
J-2
J-3
J-4
J-5
J-6
J-7
J-8
J-9
J-10
J-11
J-12
J-13
J-14
J-15
J-16
J-17
J-18
J-19
J-20
J-21
J-22
J-23
MODE SELECTOR II
Ver. 1.50
J-24

Fig. 5-1-1.

1-1-2. Preparations

Note 1: For details of how remove the cabinet and boards, refer to “2. DISASSEMBLY”.

Note 2: When performing only the adjustments, the lens block and boards need not be disassembled.

1) Connect the equipment for adjustments according to Fig. 5-1-3.

Note 3: As removing the cabinet (R) (removing the VC-242D board CN008) means removing the lithium 3V power supply (CK-093 board BT250), data such as date, time, user-set menus will be lost. After completing adjustments, reset these data. If the cabinet (R) has been removed, the self-diagnosis data, data on history of use (total drum rotation time etc.) will be lost. Before removing, note down the self-diagnosis data and the data on history use (data of page: 2, address: A2 to AA). (Refer to “SELF-DIAGNOSIS FUNCTION” for the self-diagnosis data, and to “5-4.Service Mode” for the data on the history use.)

Note 4: Setting the “Forced Camera Power ON” Mode
1) Select page: 0, address: 01, and set data: 01.
2) Select page: D, address: 10, set data: 01, and press the PAUSE button of the adjustment remote commander.
The above procedure will enable the camera power to be turned on with the control switch block (CF-4980) removed. After completing adjustments, be sure to exit the “Forced Camera Power ON Mode”.

Note 5: Exiting the “Forced Camera Power ON” Mode
1) Select page: 0, address: 01, and set data: 01.
2) Select page: D, address: 10, set data: 00, and press the PAUSE button of the adjustment remote commander.
3) Select page: 0, address: 01, and set data: 00.

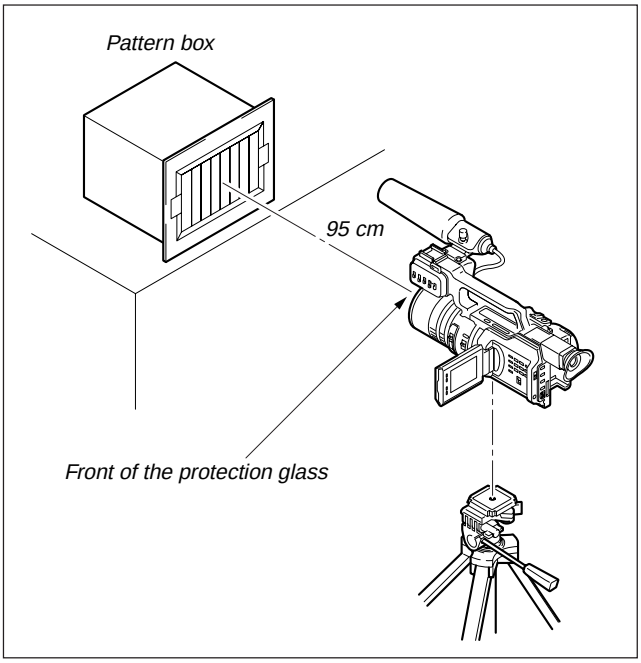

Fig. 5-1-2.

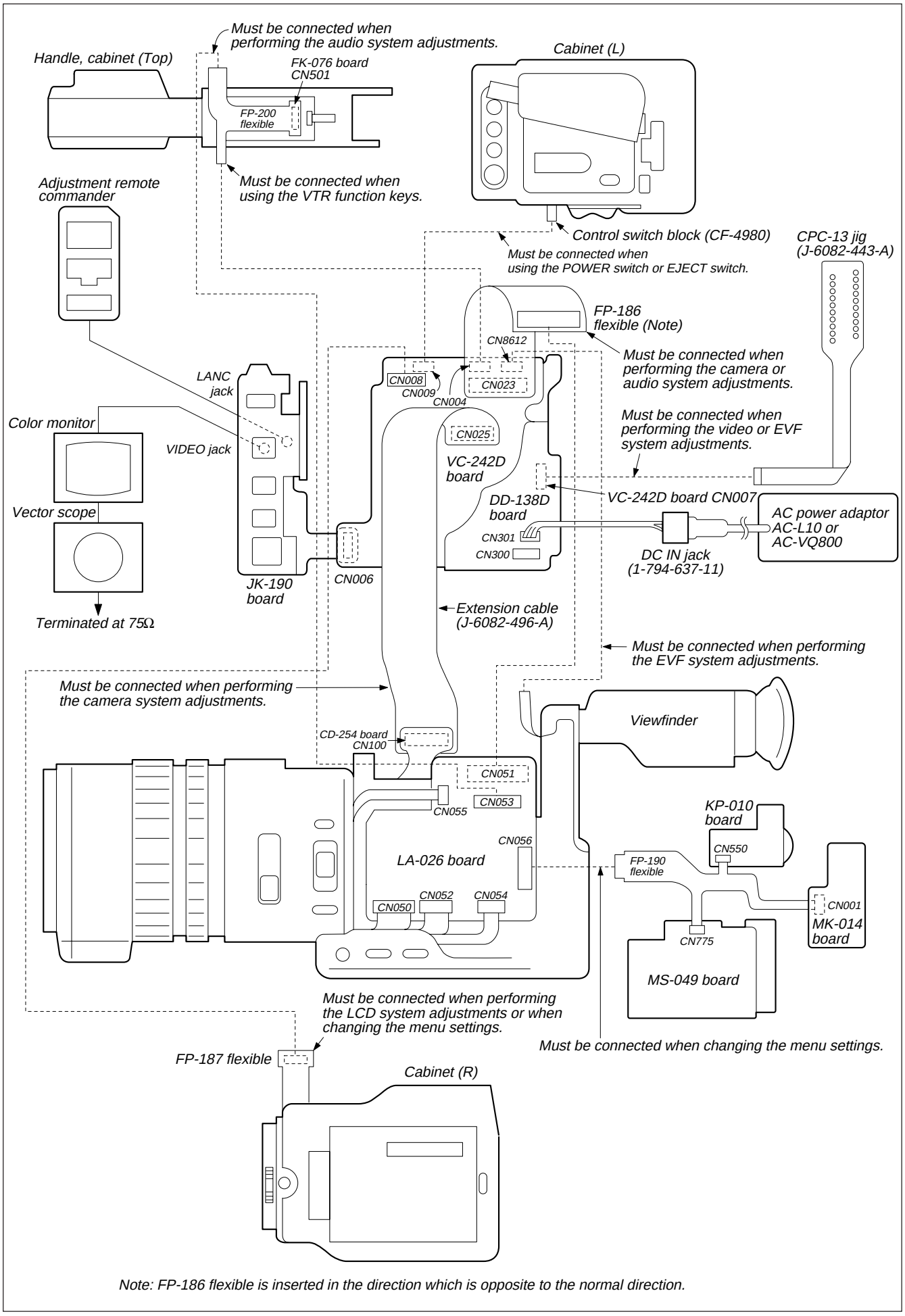

Note: FP-186 flexible is inserted in the direction which is opposite to the normal direction.

Fig. 5-1-3.

1-1-3. Precaution

1. Setting the Switch

Unless otherwise specified, set the switches as follows and perform adjustments without loading cassette.

1. POWER switch (CF-4980 block) ..... CAMERA
2. DEMO MODE (Menu display) ..... OFF
3. DIGITAL ZOOM (Menu display) ..... OFF
4. STEADY SHOT (Menu display) ..... OFF
5. DISPLAY (Menu display) ..... V-OUT/LCD
6. DISPLAY (CK-093 board) ..... ON
7. AUTO LOCK (MK-014 board) ..... AUTO
8. ND FILTER (Lens block) ..... OFF
9. FOCUS switch (FP-188 flexible) ..... MANUAL
10. BACK LIGHT (FP-189 flexible) ..... OFF
11. SPOT LIGHT (FP-189 flexible) ..... OFF
12. AE SHIFT (MK-014 board) ..... OFF
13. DIGITAL EFFECT (CK-093 board) ..... OFF
14. ZEBRA (CK-093 board) ..... OFF
15. 16 : 9 WIDE (Menu display) ..... OFF
16. AUTO SHUTTER (Menu display) ..... OFF
17. PROG.SCAN (Menu display) ..... OFF
18. SET UP 0%

2. Order of Adjustments

Basically carry out adjustments in the order given.

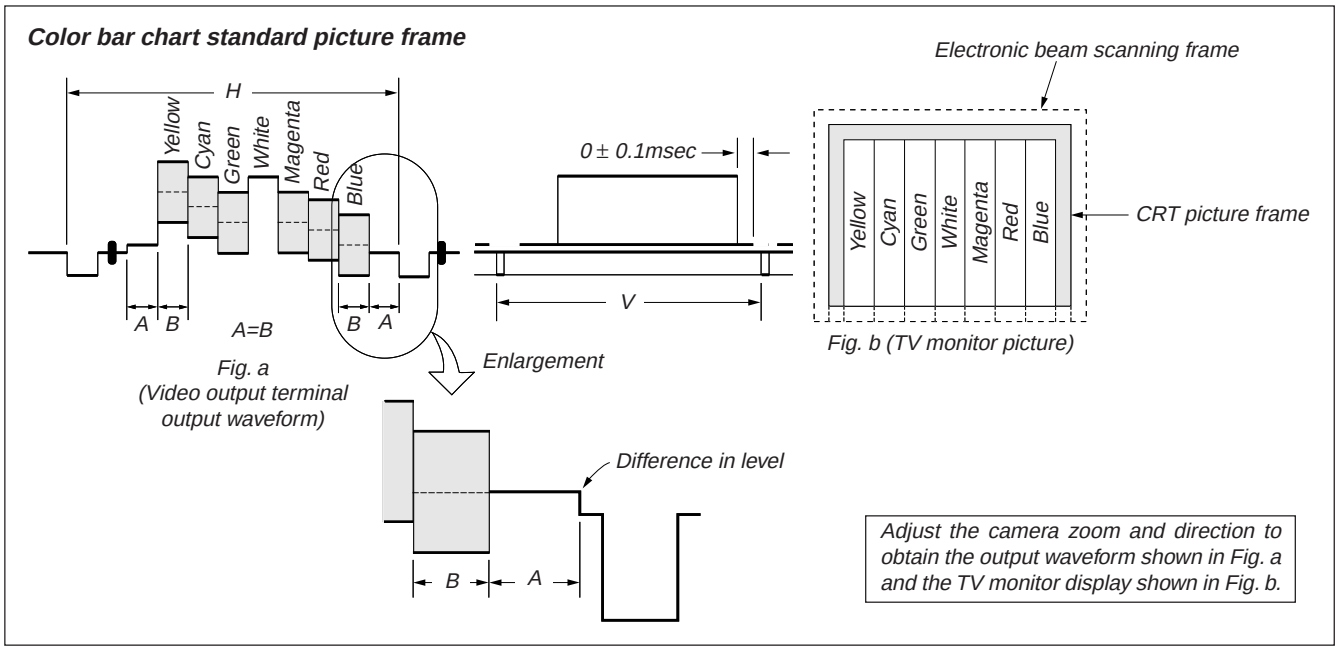

Fig. 5-1-4

3. Subjects

1) Color bar chart (Standard picture frame).
   When performing adjustments using the color bar chart, adjust the picture frame as shown in Fig. 5-1-4. (Standard picture frame)
2) Clear chart (Standard picture frame)
   Remove the color bar chart from the pattern box and insert a clear chart in its place. (Do not perform zoom operations during this time.)
3) Flange back adjustment chart
   Make the chart shown in Fig. 5-1-5 using A0 size (1189 mm × 841 mm) black and white vellum paper.

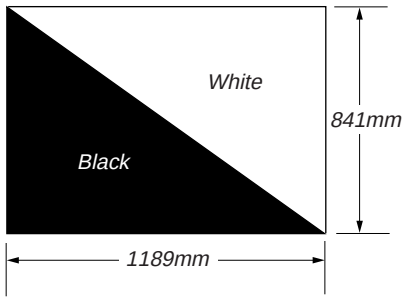

Fig. 5-1-5

Note: Use matte vellum paper bigger than A0, and make sure the edges of the black and white paper joined together are not rough.

1-2. INITIALIZATION OF A, B, C, D, E, F, 8 PAGE DATA

1-2-1. INITIALIZATION OF A, C, D, 8 PAGE DATA

Adjustment Page	C
Adjustment Address	10 to FF
Adjustment Page	D
Adjustment Address	10 to FF
Adjustment Page	8
Adjustment Address	00 to FF
Adjustment Page	A
Adjustment Address	00 to FF

1. Initializing the C, D, 8 Page Data

Note1: If "Initializing the C, D, 8 Page Data" is performed, all data of the C page, D page and 8 page will be initialized. (It is impossible to initialize a single page.)

Note2: If the C, D, 8 page data has been initialized, the following adjustments need to be performed again.
1) Modification of C, D, 8 page data
2) Serial No. input
3) Servo and RF system adjustments
4) Video system adjustments
5) Viewfinder system adjustments
6) LCD system Adjustments

Initializing Method:

Order	Page	Address	Data	Procedure
1	0	01	01	Set the data
2	3	81		Check that the data is "00".
3	3	80	0A	Set the data, and press the PAUSE button.
4	3	80		Check that the data changes to "1A"
5				Perform "Modification of C, D, 8 Page Data".

2. Modification of C, D, 8 Page Data

If the C, D, 8 page data has been initialized, change the data of the "Fixed data-2" address shown in the following tables by manual input.

Modifying Method:

1) Before changing the data, select page: 0, address: 01, and set data: 01.
2) New data for changing are not shown in the tables because they are different in destination. When changing the data, copy the data built in the same model.
   Note: If copy the data built in the different model, the camcorder may not operate.
3) When changing the data, press the PAUSE button of the adjustment remote commander each time when setting new data to write the data in the non-volatile memory.
4) Check that the data of adjustment addresses is the initial value. If not, change the data to the initial value.

Processing after Completing Modification of C, D, 8 Page data

Order	Page	Address	Data	Procedure
1	2	00	29	Set the data
2	2	01	29	Set the data, and press the PAUSE button.

Note: If the following symptoms occur after completing of the "Modification of C, D, 8 page data", check that the data of the "Fixed data-2" addresses of D page are same as those of the same model of the same destination.
1) The battery end mark on the LCD or viewfinder screen is flashing.
2) The power is shut off so that unit cannot operate.

3. C Page Table

Note: Fixed data-1: Initialized data. (Refer to "1. Initializing the C, D, 8 Page Data".)
Fixed data-2: Modified data. (Refer to "2. Modification of C, D, 8 Page Data".)

Address	Initial value	Remark
00 to 0F		
10	EE	Switching position adj.
11	00	
12	00	
13	00	
14 to 15		Fixed data-1
16	E0	Cap FG duty adj.
17	E0	Treel FG duty adj.
18	2A	AEQ adj.
19	2A	
1A		Fixed data-1
1B	32	AEQ adj.
1C	32	
1D		Fixed data-1
1E	25	AGC center level adj.
1F	3E	PLL f_0 adj.
20	3E	
21	DC	APC adj.
22	99	LPF f_0 adj.

Address	Initial value	Remark
23 to 24		Fixed data-1
25	88	S VIDEO out Y level adj.
26	E3	S VIDEO out Cr level adj.
27	22	S VIDEO out Cb level adj.
28	04	Chroma BPF f_0 adj.
29	20	PLL f_0 fine adj.
2A		Fixed data-1
2B		Fixed data-2
2C	03	APC adj.
2D to 41		Fixed data-1
42		Fixed data-2
43 to 46		Fixed data-1
47		Fixed data-2
48 to 81		Fixed data-1
82		Fixed data-2
83 to 85		Fixed data-1
86		Fixed data-2
87		
88		
89		
8A to 99		Fixed data-1
9A		Fixed data-2
9B		
9C		Fixed data-1
9D		Fixed data-2
9E		
9F		
A0		
A1 to A2		Fixed data-1
A3		Fixed data-2
A4		
A5		
A6		
A7		
A8		
A9 to AA		Fixed data-1
AB		Fixed data-2
AC		Fixed data-1
AD		Fixed data-2
AE		Fixed data-1
AF		Fixed data-2
B0		
B1		Fixed data-1
B2		Fixed data-2
B3		
B4		
B5		
B6		
B7		
B8		
B9		
BA to BF		Fixed data-1
C0		Fixed data-2
C1		Fixed data-1
C2		Fixed data-2
C3		

Address	Initial value	Remark
C4		Fixed data-2
C5		
C6		
C7		Fixed data-1
C8		Fixed data-2
C9		
CA to E7		Fixed data-1
E8	08	Serial No. input
E9	00	
EA	46	
EB	01	
EC	01	
ED	00	
EE	00	
EF	00	
F0 to F3		Fixed data-1
F4	00	Emergency memory address
F5	00	
F6	00	
F7	00	
F8	00	
F9	00	
FA	00	
FB	00	
FC	00	
FD	00	
FE	00	
FF	00	

Table. 5-1-2.

4. D Page Table

Note: Fixed data-1: Initialized data. (Refer to “1. Initializing the C, D, 8 Page Data”.)
Fixed data-2: Modified data. (Refer to “2. Modification of C, D, 8 Page Data”.)

Address	Initial value	Remark
00 to 0F		
10	00	Test mode
11 to 12		Fixed data-1
13		Fixed data-2
14		
15		Fixed data-1
16		Fixed data-2
17		
18		
19		Fixed data-1
1A		Fixed data-2
1B		
1C		
1D		Fixed data-1
1E		Fixed data-2
1F		
20		
21		
22		
23		
24		Fixed data-1
25		Fixed data-2
26		
27		
28		
29		
2A		Fixed data-1
2B		Fixed data-2
2C		
2D		Fixed data-1
2E		Fixed data-2
2F		
30		
31 to 32		Fixed data-1
33		Fixed data-2
34		
35		
36		
37		
38 to 43		Fixed data-1
44		Fixed data-2
45		
46		Fixed data-1
47		Fixed data-2
48	91	Battery end adj.
49	97	
4A	A8	
4B	BD	
4C	C8	
4D to 4E		Fixed data-1
50		Fixed data-2
51		Fixed data-2
52		
53		
54		
55 to 57		Fixed data-1
58		Fixed data-2
59		
5A		
5B		
5C		
5D to 63		Fixed data-1
64		Fixed data-2
65		
66		
67		Fixed data-1
68		Fixed data-2
69		Fixed data-1
6A		Fixed data-2
6B to 7A		Fixed data-1
7B		Fixed data-2
7C to 8F		Fixed data-1
90		Fixed data-2
91		
92	60	VCO adj. (EVF)
93	60	
94		Fixed data-2
95	AC	Bright adj. (EVF)
96		Fixed data-2
97	90	Bright adj. (EVF)
98	80	
99	30	Contrast adj. (EVF)
9A		Fixed data-1
9B		Fixed data-2
9C	F0	Backlight consumption current adj. (EVF)
9D	F0	
9E	11	
9F	1C	
A0		Fixed data-2
A1		
A2	71	VCO adj. (LCD)
A3	71	
A4	9F	V-COM adj. (LCD)
A5	AA	Bright adj.(LCD)
A6	0A	Black limit adj.(LCD)
A7		Fixed data-2
A8	85	White balance adj. (LCD)
A9	75	
AA	40	Contrast adj. (LCD)
AB	30	Center level adj.(LCD)
AC		Fixed data-2
AD		
AE		
AF		
B0		
B1 to B8		Fixed data-1
B9		Fixed data-2

Address	Initial value	Remark
BA	Fixed data-2	
BB to C3	Fixed data-1	
C4	Fixed data-2	
C5	Fixed data-1	
C6	Fixed data-2	
C7 to CF	Fixed data-1	
D0	Fixed data-2	
D1		
D2 to D5	Fixed data-1	
D6	Fixed data-2	
D7		
D8 to DA	Fixed data-1	
DB	Fixed data-2	
DC to FF	Fixed data-1	

Table. 5-1-3.

5. 8 Page Table

Note: Fixed data-1: Initialized data. (Refer to "1. Initializing the C, D, 8 Page Data".)
Fixed data-2: Modified data. (Refer to "2. Modification of C, D, 8 Page Data".)

Address	Remark
00 to 0A	Fixed data-1
0B	Fixed data-2
0C to 0F	Fixed data-1
10	Fixed data-2
11 to 98	Fixed data-1
99	Fixed data-2
9A to FF	Fixed data-1

Table. 5-1-4.

6. Initializing the A Page Data

Note1: The HRS METER data of the menu are memorized in addresses 00 to 13.
Perform "Initializing the A Page Data" only when you don't know original values of addresses 00 to 13.
If you know original values, perform "HRS METER data re-writing procedure".
(Refer to "HRS METER" of "5-4. SERVICE MODE")

Initializing Method:

1) Before changing the data, select page: 0, address: 01, and set data: 01.
2) Input the initial value shown in the A page table to each address.
3) When inputting the data, press the PAUSE button of the adjustment remote commander each time when setting new data to write the data in the non-volatile memory.
4) After completing data inputting, select page: 0, address: 01, and set data: 00.

A Page Table

Address	Initial value	Remark
00	00	OPERATION (L)
01	00	OPERATION (H)
02	00	DRUM RUN (L)
03	00	DRUM RUN (H)
04	00	TAPE RUN (L)
05	00	TAPE RUN (H)
06	00	THREADING (L)
07	00	THREADING (H)
08	00	CHECK SUM (L)
09	00	CHECK SUM (H)
0A	00	OPERATION (L)
0B	00	OPERATION (H)
0C	00	DRUM RUN (L)
0D	00	DRUM RUN (H)
0E	00	TAPE RUN (L)
0F	00	TAPE RUN (H)
10	00	THREADING (L)
11	00	THREADING (H)
12	00	CHECK SUM (L)
13	00	CHECK SUM (H)
14 to FF	Fixed-1	

Table. 5-1-5.

1-2-2. INITIALIZATION OF B PAGE DATA

Note: When reading the B page data, insert a "Memory Stick" into the "Memory Stick" slot.

Switch setting:

POWER ..... MEMORY

1. Initializing the B Page Data

Note: If the B page data has been initialized, the following adjustments need to be performed again.
1) Modification of B page data

Adjustment Page	B
Adjustment Address	00 to FF

Initializing Method

Order	Page	Address	Data	Procedure
1	0	01	01	Set the data.
2	5	01	F3	Set the data, and press PAUSE button.
3	5	00	01	Set the data, and press PAUSE button.
4	5	01		Wait for three seconds.
5	5	00		Check that the data is "00".
6	5	02		Check that the data is "00".
7				Perform "Modification of B Page Data".

2. Modification of B Page Data

If the B page data has been initialized, change the data of the "Fixed data-2" address shown in the following tables by manual input.

Preparations:

Order	Page	Address	Data	Procedure
1	2	8F	00	Set the data, and press PAUSE button.
2	2	8F	03	Set the data, and press PAUSE button.
3	2	8F	00	Set the data, and press PAUSE button.

Modifying Method:

1) Before changing the data, select page: 0, address: 01, and set data: 01.
2) New data for changing are not shown in the tables because they are different in destination. When changing the data, copy the data built in the same model.
   Note: If copy the data built in the different model, the camcorder may not operate.
3) When changing the data, press the PAUSE button of the adjustment remote commander each time when setting new data to write the data in the non-volatile memory.

Processing after Completing Modification of B Page data:

Order	Page	Address	Data	Procedure
1	2	00	29	Set the data.
2	2	01	29	Set the data, and press PAUSE button.

3. B Page Table

Note: Fixed data-1: Initialized data. (Refer to "1. or 3. Initializing the B Page Data".)
Fixed data-2: Modified data. (Refer to "2. or 4. Modification of B Page Data".)

Address	Remark
00 to 34	Fixed data-1
35	Fixed data-2
36,37	Fixed data-1
38 to 3B	Fixed data-2
3C	Fixed data-1
3D	Fixed data-2
3E to 5F	Fixed data-1
60	Fixed data-2
61 to FF	Fixed data-1

Table. 5-1-6.

1-2-3. INITIALIZATION OF E, F PAGE DATA

1. Initializing the E, F Page Data

Note1: If "Initializing the E, F Page Data" is performed, all data of the E page and F page will be initialized. (It is impossible to initialize a single page.)
Note2: If the E, F page data has been initialized, following adjustments need to be performed again.
1) Modification of E, F page data
2) Camera system adjustments

Adjustment Page	F
Adjustment Address	10 to FF
Adjustment Page	E
Adjustment Address	00 to F4 (Note3) 00 to F6 (Note4) 00 to F7 (Note5)

Note3: Camera microprocessor ver. 1.0
Note4: Camera microprocessor ver. 2.0
Note5: Camera microprocessor ver. 3.0

Switch setting:
POWER ..... CAMERA

Initializing Method:

Order	Page	Address	Data	Procedure
1	0	01	01	Set the data.
2	6	01		Set the following data, and press PAUSE button. 2D: DSR-PD150 (NTSC) 2F : DSR-PD150P (PAL)
3	6	03	01	Set the data, and press PAUSE button.
4	6	02		Check that the data changes to "01".
5				Perform "Modification of E, F Page Data".

2. Modification of E, F Page Data

If the E, F page data has been initialized, change the data of the "Fixed data-2" address shown in the following table by manual input.

Modifying Method:
1) Before changing the data, select page: 0, address: 01, and set data: 01.
2) New data for changing are not shown in the tables because they are different in destination. When changing the data, copy the data built in the same model.
   Note: If copy the data built in the different model, the camcorder may not operate.
3) When changing the data, press the PAUSE button of the adjustment remote commander each time when setting new data to write the data in the non-volatile memory.
4) Check that the data of adjustment addresses is the initial value. If not, change the data to the initial value.

Processing after Completing Modification of E, F Page data
1) Select page: 0, address: 01, and set data: 00.
2) Turn off the power and turn on again.

3. Modification of E Page Data

When replacing the camera microprocessor (VC-242D board IC802), change the data shown in the following table by manual input.

Version check of the camera microprocessor:

Order	Page	Address	Data	Procedure
1	6	FF		The data shows the version of the camera microprocessor. 01: Ver. 1.0 02: Ver. 2.0 03: Ver. 3.0

Modifying Method:
• When replaced with the camera microprocessor ver. 2.0.

Order	Page	Address	Data	Procedure
1	0	01	01	Set the data.
2	E	F5	8B	Set the data, and press PAUSE button.
3	E	F6	D0	Set the data, and press PAUSE button.
4	0	01	00	Set the data.
5				Turn off the power and turn on again.

• When replaced with the camera microprocessor ver. 3.0.

Order	Page	Address	Data	Procedure
1	0	01	01	Set the data.
2	E	F5	8B	Set the data, and press PAUSE button.
3	E	F6	D0	Set the data, and press PAUSE button.
4	E	F7	25	Set the data, and press PAUSE button.
5	0	01	00	Set the data.
6				Turn off the power and turn on again.

4. F Page Table

Note1: Fixed data-1: Initialized data. (Refer to “1. Initializing the E, F Page Data”.)
Fixed data-2: Modified data. (Refer to “2. Modification of E, F Page Data”.)

Address	Initial value		Remark
	NTSC	PAL	
00 to 0F			
10 to 14			Fixed data-1
15			Fixed data-2
16 to 1B			Fixed data-1
1C	80	80	27MHz origin osc. adj.
1D			Fixed data-1
1E	60	60	HALL adj.
1F	40	60	
20	00	00	AWB standard data input
21	15	15	
22	00	00	
23	2E	2E	
24	AE	AE	Flange back adj.
25	2B	2B	
26	44	44	
27	43	43	
28	B2	B2	
29	16	16	
2A	00	00	
2B	00	00	
2C	8B	8B	MAX GAIN adj.
2D to 33			Fixed data-1
34	88	90	Auto white balance adj.
35	6C	8F	
36	D6	D6	Flange back adj.
37	E6	E6	
38	46	46	
39	45	00	
3A	3F	19	
3B	3F	00	
3C	16	27	
3D	A8	A8	
3E	38	38	LV standard data input
3F	76	76	
40			Fixed data-1
41	50	50	Steady shot adj.
42	50	50	
43			Fixed data-1
44	EB	EB	Color reproduction adj.
45	D5	D5	(ND filter OFF)
46	20	20	
47	20	20	
48 to 49			Fixed data-1
4A	00	00	WB ND filter 1 compensation
4B	00	00	
4C to 52			Fixed data-1
53			Fixed data-2
54 to 5C			Fixed data-1
5D	80	80	Zoom key center adj.
5E to 5F			Fixed data-1

Address	Initial value		Remark
	NTSC	PAL	
60			Fixed data-2
61 to 6A			Fixed data-1
6B			Fixed data-2
6C			
6D			
6E			
6F			Fixed data-1
70	89	89	HALL adj.
71 to 7B			Fixed data-1
7C			Fixed data-2
7D			
7E to 80			Fixed data-1
81			Fixed data-2
82			Fixed data-1
83			Fixed data-2
84 to 8D			Fixed data-1
8E			Fixed data-2
8F to 9E			Fixed data-1
9F			Fixed data-2
A0 to A5			Fixed data-1
A6			Fixed data-2
A7			
A8 to B1			Fixed data-1
B2			Fixed data-2
B3 to B9			Fixed data-1
BA			Fixed data-2
BB to C5			Fixed data-1
C6			Fixed data-2
C7			Fixed data-1
C8			Fixed data-2
C9 to CA			Fixed data-1
CB			Fixed data-2
CC			
CD			
CE			
CF			
D0			
D1			
D2			
D3			
D4			
D5			
D6 to DF			Fixed data-1
E0			Fixed data-2
E1 to EC			Fixed data-1
ED			Fixed data-2
EE to F4			Fixed data-1
F5			Fixed data-2
F6			
F7			
F8			Fixed data-1
F9			Fixed data-2
FA to FC			Fixed data-1
FD			Fixed data-2
FE to FF			Fixed data-1

Table. 5-1-7.

5. E Page Table

Note1: Fixed data-1: Initialized data. (Refer to “1. Initializing the E, F Page Data”.)
Fixed data-2: Modified data. (Refer to “2. Modification of E, F Page Data”.)

Note2: Refer to “2. Modification of E, F Page Data” for the camera microprocessor version.

Address	Initial value		Remark
	NTSC	PAL	
00 to 05			Fixed data-1
06			Fixed data-2
07			
08 to 10			Fixed data-1
11			Fixed data-2
12 to 13			Fixed data-1
14			Fixed data-2
15 to 29			Fixed data-1
2A	10	10	Pre-white balance data input
2B	10	10	
2C			Fixed data-1
2D	80	80	Offset adj.
2E	80	80	
2F	80	80	
30 to 47			Fixed data-1
48			Fixed data-2
49			
4A to 51			Fixed data-1
52			Fixed data-2
53			Fixed data-1
54			Fixed data-2
55			Fixed data-1
56			Fixed data-2
57			Fixed data-1
58			Fixed data-2
59			Fixed data-1
5A			Fixed data-2
5B			
5C			Fixed data-1
5D			Fixed data-2
5E			
5F			
60 to 61			Fixed data-1
62	EB	EB	Color reproduction adj. (ND filter 1)
63	D5	D5	
64	20	20	
65	20	20	
66 to 74			Fixed data-1
75			Fixed data-2
76 to 8B			Fixed data-1
8C			Fixed data-2
8D			
8E	00	00	WB ND filter 2 compensation
8F	00	00	
90	EB	EB	Color reproduction adj. (ND filter 2)
91	D5	D5	
92	20	20	
93	20	20	
94			Fixed data-2
95 to A0			Fixed data-1
A1			Fixed data-2
A2			
A3 to A7			Fixed data-1
A8			Fixed data-2
A9 to AB			Fixed data-1
AC			Fixed data-2
AD			
AE to B0			Fixed data-1
B1			Fixed data-2
B2			Fixed data-1
B3			Fixed data-2
B4 to B9			Fixed data-1
BA			Fixed data-2
BB to C3			Fixed data-1
C4			Fixed data-2
C5 to CB			Fixed data-1
CC			Fixed data-2
CD			
CE			
CF to D9			Fixed data-1
DA			Fixed data-2
DB			
DC to EB			Fixed data-1
EC			Fixed data-2
ED to F2			Fixed data-1
F3			Fixed data-2
F4			Fixed data-1
F5 (*1)	8B	8B	Refer to “3. Modification of E Page Data”.
F6 (*1)	D0	D0	
F7 (*2)	25	25	

*1: Only for the camera microprocessor ver. 2.0 or ver. 3.0
*2: Only for the camera microprocessor ver. 3.0

Table. 5-1-8.

1-3. CAMERA SYSTEM ADJUSTMENTS

Before perform the camera system adjustments, check that the specified values of "VIDEO SYSTEM ADJUSTMENT" are satisfied.

1. 27MHz Origin Oscillation Adjustment (VC-242D board)

Set the frequency of the clock for synchronization.
If deviated, the synchronization will be disrupted and the color will become inconsistent.

Subject	Not required
Measurement Point	Pin ㊼ of IC771 or pin ⑭ of IC706
Measuring Instrument	Frequency counter
Adjustment Page	F
Adjustment Address	1C
Specified Value	f=13500000 ± 68Hz

Adjusting method:

Order	Page	Address	Data	Procedure
1	0	01	01	Set the data.
2	F	1C		Change the data and set the frequency (f) to the specified value.
3	F	1C		Press PAUSE button.
4	0	01	00	Set the data.

2. Zoom Key Center Adjustment

Set the A/D value center of the microprocessor to the center voltage of the zoom key.
If deviated, the zoom lens operates of itself ,even if the zoom key is the center position.

Subject	Not required
Measurement Point	Display data of page: 6, address: 50
Measuring Instrument	Adjustment remote commander
Adjustment Page	F
Adjustment Address	5D

Note: Don't touch the zoom switch during adjustment.

Adjusting method:

Order	Page	Address	Data	Procedure
1	0	01	01	Set the data.
2	6	50		Read the data, and this data is named D_{50}.
3	F	5D	D_{50}	Set the data, and press PAUSE button.
4	0	01	00	Set the data.

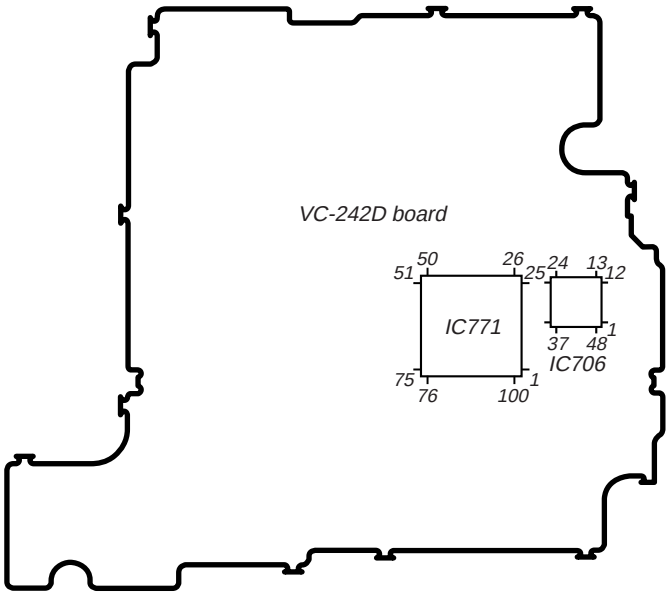

Fig. 5-1-6.

3. HALL Adjustment

For detecting the position of the lens iris, adjust AMP gain and offset.

Subject	Not required
Measurement Point	Display data of page 1 (Note1)
Measuring Instrument	Adjustment remote commander
Adjustment Page	F
Adjustment Address	1E, 1F, 70
Specified Value 1	88 to 8C
Specified Value 2	15 to 19

Note1: Displayed data of page 1 of the adjustment remote commander.
1 : XX : XX
└── IRIS display data

Note2: Check that the data of page: 6, address: 02 is "00". If not, to page: 6, address: 01, set data: 00, and press the PAUSE button.

Adjusting method:

Order	Page	Address	Data	Procedure
1	0	01	01	Set the data.
2	6	94	8A	Set the data.
3	6	95	17	Set the data.
4	6	01	6D	Set the data, and press PAUSE button.
5	6	02		Check that the data changes to "01". (Note3)
6	6	01	00	Set the data, and press PAUSE button.

Note3: The adjustment data will be automatically input to page: F, address: 1E, 1F, 70.

Checking method:

Order	Page	Address	Data	Procedure
1	6	04	03	Set the data.
2	6	01	01	Set the data, and press PAUSE button.
3	1			Check that the IRIS display data (Note1) satisfies the specified value 1.
4	6	01	03	Set the data, and press PAUSE button.
5	1			Check that the IRIS display data (Note1) satisfies the specified value.2.

Processing after Completing Adjustments:

Order	Page	Address	Data	Procedure
1	6	01	00	Set the data, and press PAUSE button.
2	6	04	00	Set the data.
3	6	94	00	Set the data.
4	6	95	00	Set the data.
5	0	01	00	Set the data.

4. Offset Adjustment

Adjust so that the AGC OUT potential lies within the specified value of the digital clamp.

Subject	Not required
Measurement Point	DDS display data of LCD or TV monitor (Note1)
Measuring Instrument	
Adjustment Page	E
Adjustment Address	2D, 2E, 2F
Specified Value	70 to 90

Note 1: DDS display data of LCD or TV monitor.
CA 00 0000
CA 00 00XX
└── Object data

Adjusting method:

Order	Page	Address	Data	Procedure
1	0	01	01	Set the data.
2	D	11	02	Set the data, and press PAUSE button.
3	6	01	05	Set the data, and press PAUSE button.
4	E	0C	02	Set the data, and press PAUSE button.
5	6	04	1F	Set the data.
6	E	2D		Change the data and adjust the DDS display data (Note 1) to "80". (Rch offset adjustment)
7	E	2D		Press PAUSE button.
8	6	04	20	Set the data.
9	E	2E		Change the data and adjust the DDS display data (Note 1) to "80". (Gch offset adjustment)
10	E	2E		Press PAUSE button.
11	6	04	21	Set the data.
12	E	2F		Change the data and adjust the DDS display data (Note 1) to "80". (Bch offset adjustment)
13	E	2F		Press PAUSE button.

Processing after Completing Adjustments

Order	Page	Address	Data	Procedure
1	D	11	00	Set the data, and press PAUSE button.
2	E	0C	00	Set the data, and press PAUSE button.
3	0	01	00	Set the data.
4	6	01	00	Set the data, and press PAUSE button.
5	6	04	00	Set the data.
6				Turn off the power and turn on again.

5. Flange Back Adjustment (Using Minipattern Box)

The inner focus lens flange back adjustment is carried out automatically. In whichever case, the focus will be deviated during auto focusing/manual focusing.

Subject	Siemens star chart with ND filter for the minipattern box (Note1)
Measurement Point	Check operation on TV monitor
Measuring Instrument	
Adjustment Page	F
Adjustment Address	24 to 2B, 36 to 3D, 5D

Note1: Dark Siemens star chart.
Note2: Check that the data of page: 6, address: 02 is “00”. If not, to page: 6, address: 01, set data: 00, and press the PAUSE button.

Switch setting:

ND FILTER ..... OFF
(The data of page: 6, address: 9D is “00”.)

Preparations:

1) The minipattern box is installed as shown in the following figure.
   Note: The attachment lenses are not used.
2) Install the minipattern box so that the distance between it and the front of the protection glass of the camcorder is less than 3cm. (Remove the lens hood.)
3) Make the height of the minipattern box and the camcorder equal.
4) Check that the output voltage of the regulated power supply is the specified voltage.
5) Check that at both the zoom lens TELE end and WIDE end, the center of the Siemens star chart and center of the exposure screen coincide.

Specified voltage: The specified voltage varies according to the minipattern box, so adjust the power supply output voltage to the specified voltage written on the sheet which is supplied with the minipattern box.

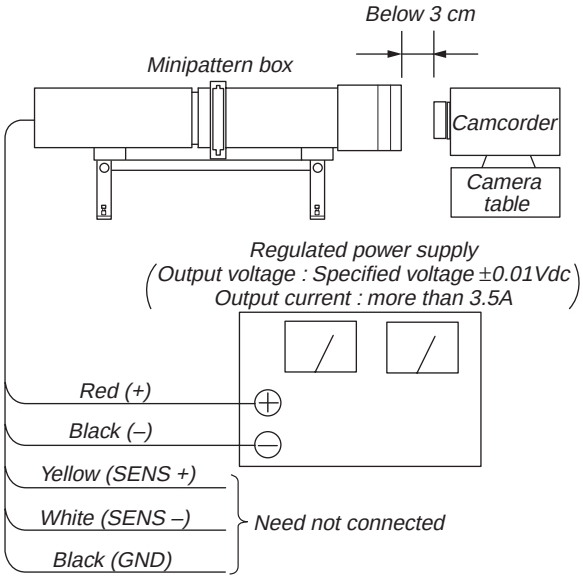

Fig. 5-1-7.

Adjusting method:

Order	Page	Address	Data	Procedure
1	0	01	01	Set the data.
2	6	01	13	Set the data, and press PAUSE button. (Note3)
3	6	01	27	Set the data, and press PAUSE button.
4	6	02		Check that the data changes to “01”. (Note4)
5	F	2A		Check that the data is “00” to “07”.

Note3: Don’t touch the zoom switch. If you touch the zoom switch, the zoom center adjustment data will be rewritten in the value which isn’t correct.
Note4: The adjustment data will be automatically input to page: F, address:: 24 to 2B, 36 to 3D, 5D.

Processing after Completing Adjustments:

Order	Page	Address	Data	Procedure
1	6	01	00	Set the data, and press PAUSE button.
2	6	02	00	Set the data.
3	0	01	00	Set the data.
4				Turn off the power and turn on again.
5				Perform “Flange Back Check”.

6. Flange Back Adjustment (Using Flange Back Adjustment Chart and Subject More Than 500m Away)

The inner focus lens flange back adjustment is carried out automatically. In whichever case, the focus will be deviated during auto focusing/manual focusing.

6-1. Flange Back Adjustment (1)

Subject	Flange back adjustment chart (2.0 m from the front of the protection glass) (Luminance: 230 ± 30 lux)
Measurement Point	Check operation on TV monitor
Measuring Instrument	
Adjustment Page	F
Adjustment Address	24 to 2B, 36 to 3D, 5D

Note1: Check that the data of page: 6, address: 02 is "00". If not, to page: 6, address: 01, set data: 00, and press the PAUSE button.

Switch setting:

ND FILTER ..... OFF

(The data of page: 6, address: 9D is "00".)

Adjusting method:

Order	Page	Address	Data	Procedure
1	0	01	01	Set the data.
2	6	01	13	Set the data, and press PAUSE button. (Note2)
3	6	01	15	Set the data, and press PAUSE button.
4	6	02		Check that the data changes to "01". (Note3)
5	F	2A		Check that the data is "00" to "07".

Note2: Don't touch the zoom switch. If you touch the zoom switch, the zoom center adjustment data will be rewritten in the value which isn't correct.

Note3: The adjustment data will be automatically input to page: F, address:: 24 to 2B, 36 to 3D, 5D.

Processing after Completing Adjustments:

Order	Page	Address	Data	Procedure
1	6	01	00	Set the data, and press PAUSE button.
2				Turn off the power and turn on again.
3				Perform "Flange Back Adjustment (2)"

6-2. Flange Back Adjustment (2)

Perform this adjustment after performing "Flange Back Adjustment (1)".

Subject	Subject more than 500m away (Subjects with clear contrast such as buildings, etc.)
Measurement Point	Check operation on TV monitor
Measuring Instrument	
Adjustment Page	F
Adjustment Address	24 to 2B, 36 to 3D, 5D

Note1: Check that the data of page: 6, address: 02 is "00". If not, to page: 6, address: 01, set data: 00, and press the PAUSE button.

Preparations:

1) Set the zoom lens to the TELE end and expose a subject that is more than 500 m away (subject with clear contrast such as building, etc.). (Nearby subjects less than 500 m away should not be in the screen.)

Adjusting method:

Order	Page	Address	Data	Procedure
1	0	01	01	Set the data.
2	6	01	13	Set the data, and press PAUSE button. (Note2)
				Place a ND filter on the lens so that the optimum image is obtain.
3	6	01	29	Set the data, and press PAUSE button.
4	6	02		Check that the data changes to "01". (Note3)

Note2: Don't touch the zoom switch. If you touch the zoom switch, the zoom center adjustment data will be rewritten in the value which isn't correct.

Note3: The adjustment data will be automatically input to page: F, address:: 24 to 2B, 36 to 3D, 5D.

Processing after Completing Adjustments:

Order	Page	Address	Data	Procedure
1	6	01	00	Set the data, and press PAUSE button.
2				Turn off the power and turn on again.
3				Perform "Flange Back Check".

7. Flange Back Check

Subject	Siemens star (2.0m from the front of the protection glass) (Luminance : approx. 300 ± 50 lux)
Measurement Point	Check operation on TV monitor
Measuring Instrument	
Specified Value	Focused at the TELE end and WIDE end.

Checking method:

1) Place the Siemens star 2.0m from the front of the protection glass.
2) To open the IRIS, decrease the luminous intensity to the Siemens star up to a point before noise appear on the image.
3) Shoot the Siemens star with the zoom TELE end.
4) Turn on the auto focus.
5) Check that the lens is focused.
6) Turn off the auto focus.
7) While observe the TV monitor, move the zoom to the WIDE end and check that the lens is focused.

8. Picture Frame Setting

Subject	Color bar chart (Color bar standard picture frame) (95cm from the front of the protection glass)
Measurement Point	Video output terminal
Measuring Instrument	Oscilloscope and TV monitor
Specified Value	A=B, C=D, t=0 ± 0.1msec

Switch setting:

1) ND FILTER ..... OFF
   (The data of page: 6, address: 9D is “00”.)
2) STEADY SHOT (Menu setting) ..... OFF

Setting method:

Order	Page	Address	Data	Procedure
1	6	2C	01	Set the data.
2	6	90	28	Set the data.
3	6	91	02	Set the data.
4	6	92	6E	Set the data.
5	6	93	49	Set the data.
6	6	01	79	Set the data, and press PAUSE button.
7				Adjust the camera direction, and set to the specified position.
8				Mark the position of the picture frame on the monitor display, and adjust the picture frame to this position in following adjustments using “Color bar standard frame”.
9	6	01	00	Set the data, and press the PAUSE button.

Check on the oscilloscope

1. Horizontal period

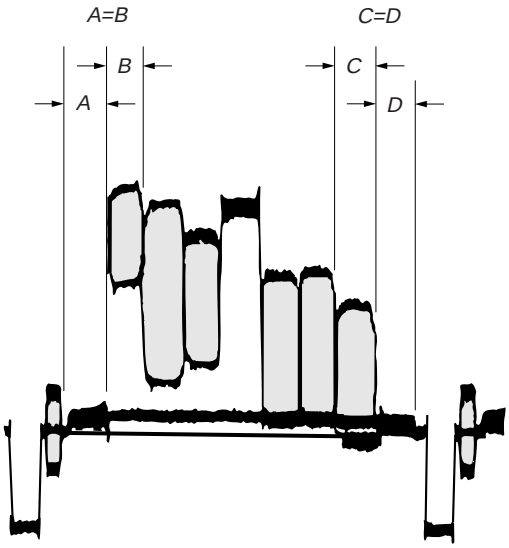

Fig. 5-1-8.

2. Vertical period

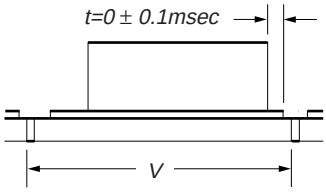

Fig. 5-1-9.

Color on the TV monitor

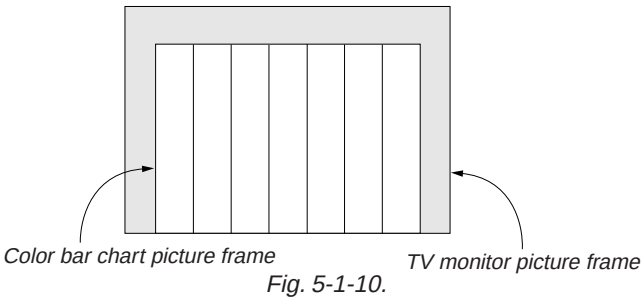

Fig. 5-1-10.

9. Pre White Balance Data Input

At 3200k, input the pre white balance standard data.

Subject	Clear chart (Color bar standard picture frame)
Adjustment Page	E
Adjustment Address	2A, 2B

Note1: After the power is turned on, this adjustment can be done only once.

Switch setting:

ND FILTER ..... OFF
(The data of page: 6, address: 9D is “00”.)

Adjusting method:

Order	Page	Address	Data	Procedure
1	0	01	01	Set the data.
2	6	02	00	Set the data.
3	F	20	00	Set the data, and press PAUSE button.
4	F	21	15	Set the data, and press PAUSE button.
5	F	22	00	Set the data, and press PAUSE button.
6	F	23	2E	Set the data, and press PAUSE button.
7	6	01	7F	Set the data, and press PAUSE button.
8	6	01	7D	Set the data, and press PAUSE button. (Note)
9	6	02		Check that the data changes to “01”.

Note: The adjustment data will be automatically input to page: E, address: 2A and 2B.

Processing after Completing Adjustments

Order	Page	Address	Data	Procedure
1	6	01	00	Set the data, and press PAUSE button.
2	6	02	00	Set the data.
3	0	01	00	Set the data.
4				Perform “Auto White Balance Standard Data Input”.

10. Auto White Balance Standard Data Input

At 3200K, input the white balance standard data.

Subject	Clear chart (Color bar standard picture frame)
Adjustment Page	F
Adjustment Address	20 to 23

Note1: After the power is turned on, this adjustment can be done only once.

Note2: Check that the data of page: 6, address: 02 is “00”. If not, to page: 6, address: 01, set data: 00, and press the PAUSE button.

Switch setting:

ND FILTER ..... OFF
(The data of page: 6, address: 9D is “00”.)

Adjusting method:

Order	Page	Address	Data	Procedure
1	0	01	01	Set the data.
2	6	01	11	Set the data, and press PAUSE button.
3	6	01	0B	Set the data, and press PAUSE button. (Note)
4	6	02		Check that the data changes to “01”.

Note: The adjustment data will be automatically input to page: F, address: 20 to 23.

Processing after Completing Adjustments

Order	Page	Address	Data	Procedure
1	6	01	00	Set the data, and press PAUSE button.
2	6	02	00	Set the data.
3	0	01	00	Set the data.

11. MAX GAIN Adjustment

Setting the minimum illumination.
If it is not consistent, the image level required for taking subjects in low illuminance will not be produced (dark).

Subject	Clear chart (Color bar standard picture frame)
Adjustment Page	F
Adjustment Address	2C

Switch setting:

ND FILTER ..... OFF
(The data of page: 6, address: 9D is “00”.)

Adjusting method:

Order	Page	Address	Data	Procedure
1	0	01	01	Set the data.
2	6	02	00	Set the data.
3	6	96	00	Set the data.
4	6	97	5C	Set the data.
5	6	01	6F	Set the data, and press PAUSE button. (Note)
6	6	02		Check that the data changes to “01”.

Note: The adjustment data will be automatically input to page: F, address: 2C.

Processing after Completing Adjustments

Order	Page	Address	Data	Procedure
1	6	96	00	Set the data.
2	6	97	00	Set the data.
3	6	01	00	Set the data, and press PAUSE button.
4	6	02	00	Set the data.
5	0	01	00	Set the data.

12. LV Standard Data Input

Adjust the normal coefficient of the light value.

Subject	Clear chart (Color bar standard picture frame)
Measurement Point	Display data of page 1 (Note2)
Measuring Instrument	Adjustment remote commander
Adjustment Page	F
Adjustment Address	3E, 3F
Specified Value	0FE0 to 1020

Note1: Check that the data of page: 6, address: 02 is “00”. If not, turn the power of the unit OFF/ON.

Note2: Displayed data of page 1 of the adjustment remote commander.

1 : XX : XX
└──── LV data

Switch setting:

ND FILTER ..... OFF
(The data of page: 6, address: 9D is “00”.)

Adjusting method:

Order	Page	Address	Data	Procedure
1	0	01	01	Set the data.
2	F	15	40	Set the data, and press PAUSE button.
3				Wait for 5 seconds.
4	6	01	0D	Set the data, and press PAUSE button. (Note3)
5	6	02		Check that the data changes to “01”.
6	6	04	1E	Set the data.
7	1			Check that the LV data (Note2) satisfies the specified value. If not, repeat from step 2.

Note3: The adjustment data will be automatically input to page: F, address: 3E and 3F.

Processing after Completing Adjustments

Order	Page	Address	Data	Procedure
1	6	01	00	Set the data, and press PAUSE button.
2	6	02	00	Set the data.
3	6	04	00	Set the data.
4	F	15	44	Set the data, and press PAUSE button.
5	0	01	00	Set the data.

13. White Balance ND Filter 1 Compensation

Compensate the white balance deviation when ND FILTER switch is “1”.

Subject	Clear chart (Color bar standard picture frame)
Adjustment Page	F
Adjustment Address	4A, 4B

Note1: After the power is turned on, this adjustment can be done only once.

Note2: Check that the data of page: 6, address: 02 is “00”. If not, to page: 6, address: 01, set data: 00, and press the PAUSE button.

Switch setting:

ND FILTER 1

(The data of page: 6, address: 9D is “01”.)

Adjusting method:

Order	Page	Address	Data	Procedure
1	0	01	01	Set the data.
2	6	01	11	Set the data, and press PAUSE button.
3	6	01	09	Set the data, and press PAUSE button. (Note)
4	6	02		Check that the data changes to “01”.

Note: The adjustment data will be automatically input to page: F, address: 4A and 4B.

Processing after Completing Adjustments

Order	Page	Address	Data	Procedure
1	6	01	00	Set the data, and press PAUSE button.
2	6	02	00	Set the data.
3	0	01	00	Set the data.

14. White Balance ND Filter 2 Compensation

Compensate the white balance deviation when ND FILTER switch is “2”.

Subject	Clear chart (Color bar standard picture frame)
Adjustment Page	E
Adjustment Address	8E, 8F

Note1: After the power is turned on, this adjustment can be done only once.

Note2: Check that the data of page: 6, address: 02 is “00”. If not, to page: 6, address: 01, set data: 00, and press the PAUSE button.

Switch setting:

ND FILTER 2

(The data of page: 6, address: 9D is “02”.)

Adjusting method:

Order	Page	Address	Data	Procedure
1	0	01	01	Set the data.
2	6	01	CF	Set the data, and press PAUSE button.
3	6	01	CD	Set the data, and press PAUSE button. (Note)
4	6	02		Check that the data changes to “01”.

Note: The adjustment data will be automatically input to page: E, address: 8E and 8F.

Processing after Completing Adjustments

Order	Page	Address	Data	Procedure
1	6	01	00	Set the data, and press PAUSE button.
2	6	02	00	Set the data.
3	0	01	00	Set the data.
4				Set ND FILTER switch to “OFF”.

15. Auto White Balance Adjustment

Adjust to the proper auto white balance output data.
If it is not correct, auto white balance and color reproducibility will be poor.

Subject	Clear chart (Color bar standard picture frame)
Filter	Filter C14 for color temperature correction
Adjustment Page	F
Adjustment Address	34, 35

Note1: After the power is turned on, this adjustment can be done only once.
Note2: Check that the data of page: 6, address: 02 is “00”. If not, to page: 6, address: 01, set data: 00, and press the PAUSE button.

Switch setting:

ND FILTER ..... OFF
(The data of page: 6, address: 9D is “00”.)

Adjusting method:

Order	Page	Address	Data	Procedure
1				Place the C14 filter for color temperature correction on the lens.
2	0	01	01	Set the data.
3	6	02	00	Set the data.
4	6	01	83	Set the data, and press PAUSE button.
5	6	01	81	Set the data, and press PAUSE button. (Note)
6	6	02		Check that the data changes to “01”.

Note: The adjustment data will be automatically input to page: F, address: 34 and 35.

Processing after Completing Adjustments

Order	Page	Address	Data	Procedure
1	6	01	00	Set the data, and press PAUSE button.
2	6	02	00	Set the data.
3	0	01	00	Set the data.

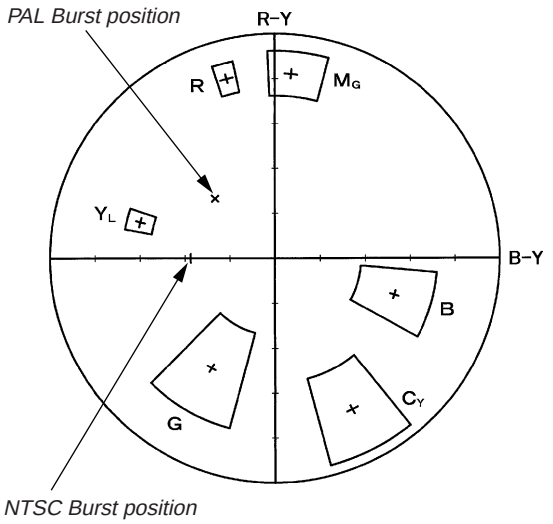

Fig. 5-1-11.

16. Color Reproduction Adjustment (ND Filter OFF)

When the ND FILTER switch is “OFF”, adjust the color difference matrix coefficient so that proper color reproduction is produced.

Subject	Color bar chart (Color bar standard picture frame)
Measurement Point	Video output terminal
Measuring Instrument	Vectorscope
Adjustment Page	F
Adjustment Address	44, 45, 46, 47
Specified Value	All color luminance points should settle within each color reproduction frame. (Fig. 5-1-11)

Note1: After the power is turned on, this adjustment can be done only once.
Note2: Check that the data of page: 6, address: 02 is “00”. If not, to page: 6, address: 01, set data: 00, and press the PAUSE button.

Switch setting:

ND FILTER ..... OFF
(The data of page: 6, address: 9D is “00”.)

Adjusting method:

Order	Page	Address	Data	Procedure
1				Check that the picture frame is set to the specified position. (Refer to “8. Picture Frame Setting”.)
2	0	01	01	Set the data.
3	F	5E	2D	Set the data, and press PAUSE button.
4	F	44	00	Set the data, and press PAUSE button.
5	F	45	00	Set the data, and press PAUSE button.
6	F	46	20	Set the data, and press PAUSE button.
7	F	47	20	Set the data, and press PAUSE button.
8	6	01	AB	Set the data, and press PAUSE button.
9	6	01	A9	Set the data, and press PAUSE button. (Note)
10	6	02		Check that the data changes to “01”.
11				Adjust the GAIN and PHASE of the vectorscope, and adjust the burst luminance point to the burst position of the color reproduction frame. (Fig. 5-1-11)
12				Check that all color luminance points settle within each color reproduction frame. (Fig. 5-1-11)

Note: The adjustment data will be automatically input to page: F, address: 44 to 47.

Processing after Completing Adjustments

Order	Page	Address	Data	Procedure
1	6	01	00	Set the data, and press PAUSE button.
2	6	02	00	Set the data.
3	F	5E	1D	Set the data, and press PAUSE button.
3	0	01	00	Set the data.

17. Color Reproduction Adjustment (ND Filter 1)

When the ND FILTER switch is “1”, adjust the color difference matrix coefficient so that proper color reproduction is produced.

Subject	Color bar chart (Color bar standard picture frame)
Measurement Point	Video output terminal
Measuring Instrument	Vectorscope
Adjustment Page	E
Adjustment Address	62, 63, 64, 65
Specified Value	All color luminance points should settle within each color reproduction frame. (Fig. 5-1-11)

Note1: After the power is turned on, this adjustment can be done only once.
Note2: Check that the data of page: 6, address: 02 is “00”. If not, to page: 6, address: 01, set data: 00, and press the PAUSE button.

Switch setting:

1) ND FILTER 1
(The data of page: 6, address: 9D is “01”.)

Adjusting method:

Order	Page	Address	Data	Procedure
1				Check that the picture frame is set to the specified position. (Refer to “8. Picture Frame Setting”.)
2	0	01	01	Set the data.
3	F	5E	2D	Set the data, and press PAUSE button.
4	E	62	00	Set the data, and press PAUSE button.
5	E	63	00	Set the data, and press PAUSE button.
6	E	64	20	Set the data, and press PAUSE button.
7	E	65	20	Set the data, and press PAUSE button.
8	6	01	C3	Set the data, and press PAUSE button.
9	6	01	C1	Set the data, and press PAUSE button. (Note)
10	6	02		Check that the data changes to “01”.
11				Adjust the GAIN and PHASE of the vectorscope, and adjust the burst luminance point to the burst position of the color reproduction frame. (Fig. 5-1-11)
12				Check that all color luminance points settle within each color reproduction frame. (Fig. 5-1-11)

Note: The adjustment data will be automatically input to page: E, address: 62 to 65.

Processing after Completing Adjustments

Order	Page	Address	Data	Procedure
1	6	01	00	Set the data, and press PAUSE button.
2	6	02	00	Set the data.
3	F	5E	1D	Set the data, and press PAUSE button.
4	0	01	00	Set the data.

18. Color Reproduction Adjustment (ND Filter 2)

When the ND FILTER switch is “2”, adjust the color difference matrix coefficient so that proper color reproduction is produced.

Subject	Color bar chart (Color bar standard picture frame)
Measurement Point	Video output terminal
Measuring Instrument	Vectorscope
Adjustment Page	E
Adjustment Address	90, 91, 92, 93
Specified Value	All color luminance points should settle within each color reproduction frame. (Fig. 5-1-11)

Note1: After the power is turned on, this adjustment can be done only once.
Note2: Check that the data of page: 6, address: 02 is “00”. If not, to page: 6, address: 01, set data: 00, and press the PAUSE button.

Switch setting:

1) ND FILTER 2
(The data of page: 6, address: 9D is “02”.)

Adjusting method:

Order	Page	Address	Data	Procedure
1				Check that the picture frame is set to the specified position. (Refer to “8. Picture Frame Setting”.)
2	0	01	01	Set the data.
3	F	5E	2D	Set the data, and press PAUSE button.
4	E	90	00	Set the data, and press PAUSE button.
5	E	91	00	Set the data, and press PAUSE button.
6	E	92	20	Set the data, and press PAUSE button.
7	E	93	20	Set the data, and press PAUSE button.
8	6	01	CB	Set the data, and press PAUSE button.
9	6	01	C9	Set the data, and press PAUSE button. (Note)
10	6	02		Check that the data changes to “01”.
11				Adjust the GAIN and PHASE of the vectorscope, and adjust the burst luminance point to the burst position of the color reproduction frame. (Fig. 5-1-11)
12				Check that all color luminance points settle within each color reproduction frame. (Fig. 5-1-11)

Note: The adjustment data will be automatically input to page: E, address: 90 to 93.

Processing after Completing Adjustments

Order	Page	Address	Data	Procedure
1	6	01	00	Set the data, and press PAUSE button.
2	6	02	00	Set the data.
3	F	5E	1D	Set the data, and press PAUSE button.
4	0	01	00	Set the data.
5				Set ND FILTER switch to “OFF”.

19. White Balance Check

Subject	Clear chart (Color bar standard picture frame)
Filter	Filter C14 for color temperature correction ND filter 1.0 and 0.3 (2 sheets)
Measurement Point	Video output terminal
Measuring Instrument	Vectorscope
Specified Value	Fig. 5-1-12. A to B

Switch setting:

ND FILTER ..... OFF

(The data of page: 6, address: 9D is “00”.)

Checking method:

Order	Page	Address	Data	Procedure
				Indoor white balance check
1				Check that the lens is not covered with either filter.
2	6	01	0F	Set the data, and press PAUSE button.
3				Check that the center of the white luminance point is within the circle shown Fig. 5-1-12. A.
				Outdoor white balance check
4				Place the C14 filter on the lens.
5	6	01	3F	Set the data, and press PAUSE button.
6				Check that the center of the white luminance point is within the circle shown Fig. 5-1-12. B.
7				Remove the C14 filter.
				Indoor white balance data check
8				Place the ND filter 1.6 (1.0+0.3+0.3) on the lens.
9	6	01	0F	Set the data, and press PAUSE button.
10				Wait for 2 seconds.
11	0	01	01	Set the data.
12	F	10	A1	Set the data, and press PAUSE button.
13	F	11	04	Set the data, and press PAUSE button.
14	1			Check that the second digit of the display data (Note) is an odd number. Specified value: 1 : XX : XX └── Odd number
15	6	04	C6	Set the data.
16	1			Check that the display data (Note) satisfies the specified value. Specified value: 0000 to 0C50

Note: Displayed data of the adjustment remote commander.

1 : XX : XX
└── Display data

Processing after Completing Adjustments

Order	Page	Address	Data	Procedure
1	6	01	00	Set the data, and press PAUSE button.
2	6	04	00	Set the data.
3	F	10	00	Set the data, and press PAUSE button.
4	F	11	00	Set the data, and press PAUSE button.
5	0	01	00	Set the data.

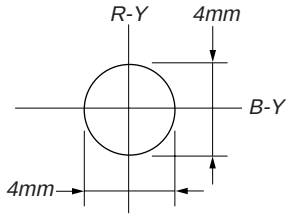

Fig. 5-1-12. (A)

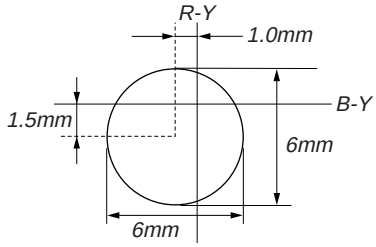

Fig. 5-1-12. (B)

20. Steady Shot Adjustment

- This adjustment is performed only when replacing the angular velocity sensor.
  Although this adjustment need not be performed when the circuit is damaged, etc., check the operations.
- Note down the sensitivity displayed on the angular velocity sensor of the repair parts. At this time, note down also to which board it was attached to.

Be sure to check because if attached incorrectly, the screen will vibrate up and down or left and right during hand-shake correction operations.

Precautions on the Parts Replacement

There are two types of repair parts.

Type A: ENC03JA
Type B: ENC03JB

Replace the broken sensor with a same type sensor. If replace with other type parts, the image will vibrate up and down or left and right during hand-shake correction operations. After replacing, re-adjust according to the adjusting method after replacement.

Precautions on Angular Velocity Sensor

The sensor incorporates a precision oscillator. Handle it with care as if it dropped, the balance of the oscillator will be disrupted and operations will not be performed properly.

Switch setting:

STEADY SHOT (Menu) ..... ON
DIGITAL ZOOM (Menu) ..... OFF

20-1. Steady Shot Adjustment (1)

Subject	Pattern A (1.5m from the front of the lens)
Measurement Point	Video output terminal
Measuring Instrument	Oscilloscope (V period)
Adjustment Page	F
Adjustment Address	41

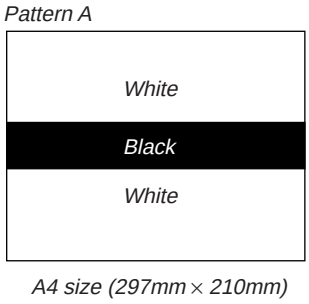

Fig.5-1-13.

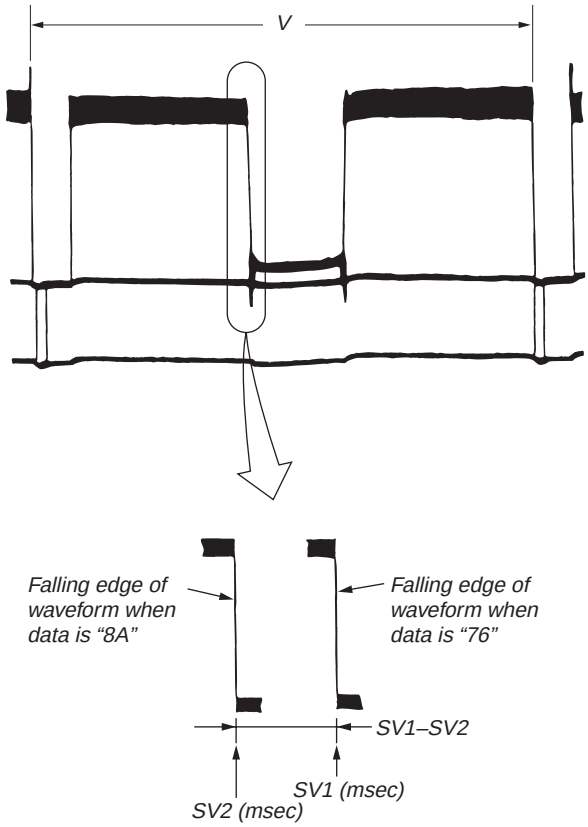

Fig. 5-1-14.

Adjusting method:

1) Select page: 0, address: 01, and set data: 01.
2) Select page: F, address: EA, set data: 76, and press the PAUSE button of the adjustment remote commander.
3) Expose pattern A with the zoom TELE end.
4) Adjust the focus.
5) Measure the vertical position SV1 (msec) of the falling edge of the waveform. (Oscilloscope is V period)
6) Select page: F, address: EA, set data: 8A, and press the PAUSE button.
7) Measure the vertical position SV2 (msec) of the falling edge of the waveform. (Oscilloscope is V period)
8) Obtain D_{41}' using the following equation (decimal calculation).
   NTSC model
   $$D_{41}' = \frac{1.53}{SV1 - SV2} \times \frac{0.6}{\text{PITCH sensor sensitivity}} \times 99$$
   PAL model
   $$D_{41}' = \frac{1.84}{SV1 - SV2} \times \frac{0.6}{\text{PITCH sensor sensitivity}} \times 99$$
   Note: PITCH sensor sensitivity (SE601 or SE602 of SE-108 board) is written only on the repair parts.
9) Convert D_{41}' to hexadecimal notation, and obtain D_{41}. (Round off to one decimal place)
   (Refer to Table 5-4-1. "Hexadecimal notation-Decimal notation conversion table" of "5-4. Service Mode".)
10) Select page: F, address: 41, set data: D_{41}, and press the PAUSE button.

Processing after Completing Adjustments

1) Select page: F, address: EA, set data: 80, and press the PAUSE button of the adjustment remote commander.
2) Select page: 0, address: 01, and set data: 00.
3) Check that the steady shot operation is performed normally.

20-2. Steady Shot Adjustment (2)

Subject	Pattern B (1.5m from the front of the lens)
Measurement Point	Video output terminal
Measuring Instrument	Oscilloscope (H period)
Adjustment Page	F
Adjustment Address	42

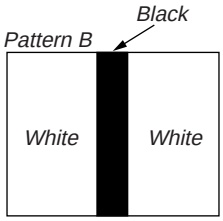

A4 size (297mm × 210mm)

Fig.5-1-15.

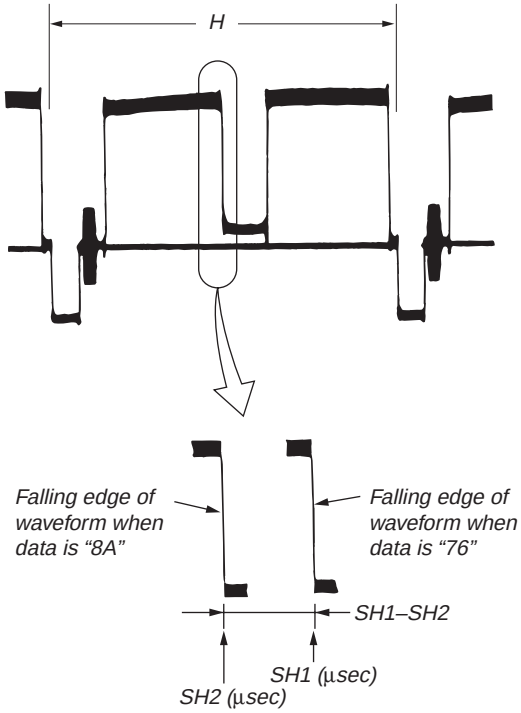

Fig. 5-1-16.

Adjusting method:

1) Select page: 0, address: 01, and set data: 01.
2) Select page: F, address: EB, set data: 76, and press the PAUSE button of the adjustment remote commander.
3) Expose pattern B with the zoom TELE end.
4) Adjust the focus.
5) Measure the horizontal position SH1 (μ sec) of the falling edge of the waveform. (Oscilloscope is H period)
6) Select page: F, address: EB, set data: 8A, and press the PAUSE button.
7) Measure the horizontal position SH2 (μ sec) of the falling edge of the waveform. (Oscilloscope is H period)
8) Obtain D_{42}' using the following equation (decimal calculation).

$$D_{42}' = \frac{3.90}{SH1 - SH2} \times \frac{0.6}{\text{YAW sensor sensitivity}} \times 99$$

Note: YAW sensor sensitivity (SE600 or SE603 of SE-108 board) is written only on the repair parts.

9) Convert D_{42}' to hexadecimal notation, and obtain D_{42}. (Round off to one decimal place)
(Refer to Table 5-4-1. "Hexadecimal notation-Decimal notation conversion table" of "5-4. Service Mode".)
10) Select page: F, address: 42, set data: D_{42}, and press the PAUSE button.

Processing after Completing Adjustments

1) Select page: F, address: EB, set data: 80, and press the PAUSE button of the adjustment remote commander.
2) Select page: 0, address: 01, and set data: 00.
3) Check that the steady shot operation is performed normally.

1-4. ELECTRONIC VIEWFINDER SYSTEM ADJUSTMENT

Note1: The back light (fluorescent tube) is driven by a high voltage AC power supply. Therefore, do not touch the back light holder to avoid electrical shock.

Note2: When replacing the LCD unit, be careful to prevent damages caused by static electricity.

Note3: Set the switch as follow.
LCD screen ..... OFF (Closed)

Note4: As the PANEL CLOSE switch is attached to the cabinet (R), this cabinet must be attached when performing adjustments.
If you perform the adjustments with cabinet (R) removed, set the following data.
1) Select page: 2, address: 0E, and set data: 67.
2) Select page: 2, address: 0F, and set data: 01.
Reset the data after completing adjustment.
1) Select page: 2, address: 0E, and set data: 00.
2) Select page: 2, address: 0F, and set data: 00.

[Adjusting connector]

Most of the measuring points for adjusting the viewfinder system are concentrated in CN007 of the VC-242D board.
Connect the Measuring Instruments via the CPC-13 jig (J-6082-433-A).
The following table shows the Pin No. and signal name of CN007.

Pin No.	Signal Name	Pin No.	Signal Name
1	GND	11	H START
2	RF MON	12	XHD/PSIG
3	SWP	13	EVF VB
4	RF IN/LANC JACK IN	14	EVF VR
5	TDO	15	EVF VCO
6	GND	16	GND
7	TCK	17	EVF BL –
8	TDI	18	EVF VG
9	PANEL COM	19	LANC SIG
10	TMS	20	EVF BL +

Table 5-1-7.

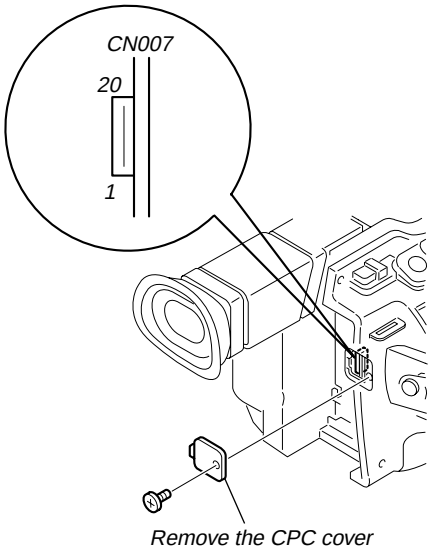

Fig. 5-1-17.

1. VCO Adjustment (VC-242D board)

Set the VCO free-run frequency. If deviated, the EVF screen will be blurred.

Mode	Camera
Subject	Arbitrary
Measurement Point	Pin ⑮ of CN007 (EVF VCO)
Measuring Instrument	Frequency counter
Adjustment Page	D
Adjustment Address	92, 93
Specified Value	f = 15734 ± 30Hz (NTSC) f = 15625 ± 30Hz (PAL)

Note1: NTSC: DSR-PD150
PAL: DSR-PD150P

Adjusting method:

Order	Page	Address	Data	Procedure
1	0	01	01	Set the data.
2	D	92		Change the data and set the VCO frequency (f) to the specified value.
3	D	92		Press PAUSE button.
4	D	92		Read the data, and this data is named D_{92}.
5				Convert D_{92} to decimal notation, and obtain D_{92}'. (Note2)
6				Calculate D_{93}' using following equations (Decimal calculation) NTSC model: When $D_{92}' \leqq 226$ $D_{93}' = D_{92}' + 29$ When $D_{92}' > 226$ $D_{93}' = 255$ PAL model: When $D_{92}' \geqq 29$ $D_{93}' = D_{92}' - 29$ When $D_{92}' < 29$ $D_{93}' = 00$
7				Convert D_{93}' to a hexadecimal number, and obtain D_{93}. (Note2)
8	D	93	D_{93}	Set the data, and press PAUSE button.
9	0	01	00	Set the data.

Note2: Refer to “Table 5-4-1. Hexadecimal-decimal Conversion Table”.

2. Bright Adjustment (1) (VC-242D board)

Set the D range of the RGB decoder used to drive the LCD to the specified value. If deviated, the LCD screen will become blackish or saturated (whitish).

Mode	Camera
Subject	Arbitrary
Measurement Point	Pin ⑱ of CN007 (EVF VG)
Measuring Instrument	Oscilloscope
Adjustment Page	D
Adjustment Address	95
Specified Value	A = 7.40 ± 0.05V

Adjusting method:

Order	Page	Address	Data	Procedure
1	0	01	01	Set the data.
2	D	95		Change the data and set the voltage (A) between the reversed waveform pedestal and non-reversed waveform pedestal to the specified value.
3	D	95		Press PAUSE button.
4	0	01	00	Set the data.

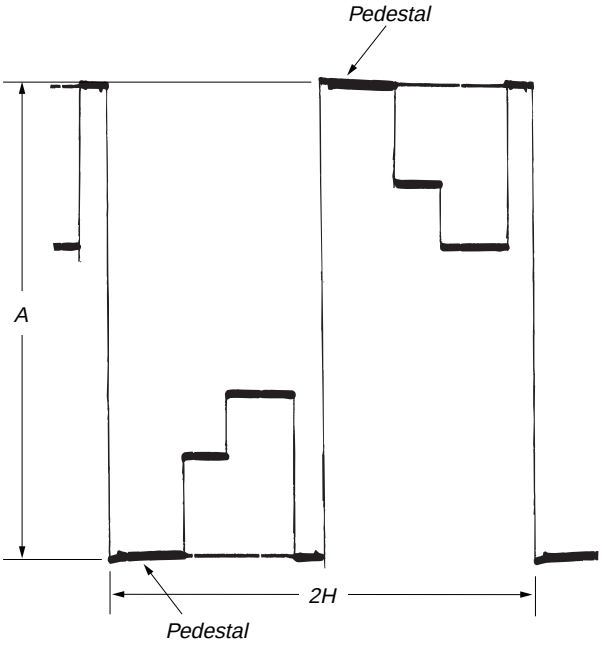

Fig. 5-1-18.

3. Bright Adjustment (2) (VC-242D board)

Set the D range of the RGB decoder used to drive the LCD to the specified value.

Mode	Camera
Subject	Arbitrary
Measurement Point	Pin ⑭ of CN007 (EVF VR) Pin ⑬ of CN007 (EVF VB)
Measuring Instrument	Oscilloscope
Adjustment Page	D
Adjustment Address	97, 98
Specified Value	A = 7.40 ± 0.05V

Adjusting method:

Order	Page	Address	Data	Procedure
1	0	01	01	Set the data.
2				Connect the oscilloscope to Pin ⑭ of CN007 (EVF VR).
3	D	97		Change the data and set the voltage (A) between the reversed waveform pedestal and non-reversed waveform pedestal to the specified value.
4	D	97		Press PAUSE button.
5				Connect the oscilloscope to Pin ⑬ of CN007 (EVF VB).
6	D	98		Change the data and set the voltage (A) between the reversed waveform pedestal and non-reversed waveform pedestal to the specified value.
7	D	98		Press PAUSE button.
8	0	01	00	Set the data.

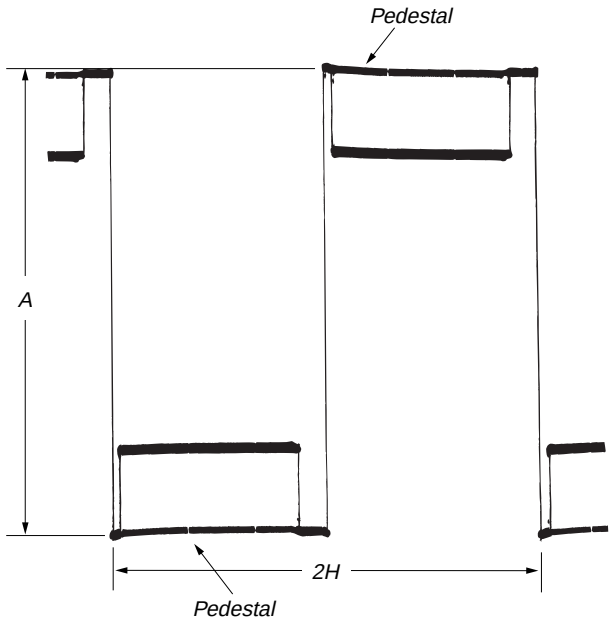

Fig. 5-1-19.

4. Contrast Adjustment (VC-242D board)

Set the level of the VIDEO signal for driving the LCD to the specified value. If deviated, the screen image will be blackish or saturated (whitish).

Mode	Camera
Subject	Arbitrary
Measurement Point	Pin ⑱ of CN007 (EVF VG)
Measuring Instrument	Oscilloscope
Adjustment Page	D
Adjustment Address	99
Specified Value	A=2.20 ± 0.05V

Adjusting method:

Order	Page	Address	Data	Procedure
1	0	01	01	Set the data.
2	D	99		Change the data and set the voltage (A) between the 3 steps peak and pedestal to the specified value. (The data should be “00” to “7F”.)
3	D	99		Press PAUSE button.
4	0	01	00	Set the data.

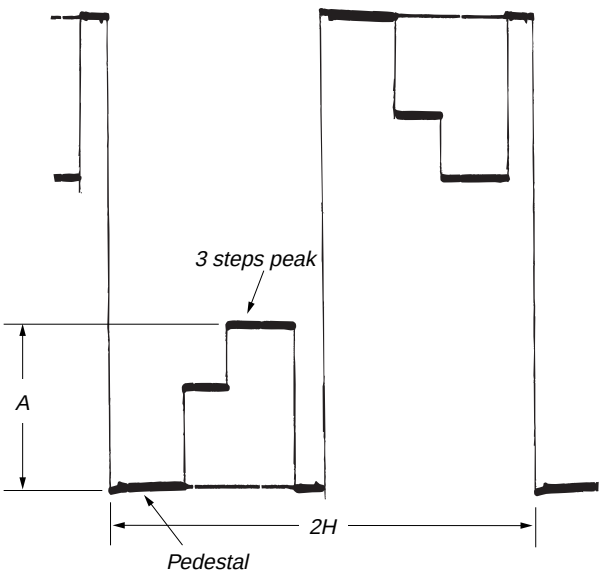

Fig. 5-1-20.

5. Backlight Consumption Current Adjustment (VC-242D board)

Set the backlight luminance and color temperature.
If deviated, the image may become dark or bright.

Mode	Camera
Subject	Arbitrary
Measurement Point	+ Probe: Pin ⑳ of CN007 (EVF BL+) – Probe: Pin ⑰ of CN007 (EVF BL–)
Measuring Instrument	Digital voltmeter
Adjustment Page	D
Adjustment Address	9C, 9D, 9E, 9F
Specified Value	BRIGHT mode : A=22.0 ± 1.5mVdc NORMAL mode : A=13.0 ± 1.5mVdc

Note1: Perform the adjustment in the following order.
Note2: Adjust 30 seconds after running on the power supply.

Adjusting method:

Order	Page	Address	Data	Procedure
1	0	01	01	Set the data.
2	D	9C	F0	Set the data, and press PAUSE button.
3	D	9D	F0	Set the data, and press PAUSE button.
4	D	9E	11	Set the data, and press PAUSE button.
5	D	9F	1C	Set the data, and press PAUSE button.
6	D	9D		Change the data and set the voltage difference (A) between Pin ⑳ and Pin ⑰ to the specified value of BRIGHT mode. (The data should be “C0” to “FF”.)
7	D	9D		Press PAUSE button.
8	D	9C		Set the same data as address: 9D.
9	D	9C		Press PAUSE button.
10	D	9E		Change the data and set the voltage difference (A) between Pin ⑳ and Pin ⑰ to the specified value of NORMAL mode. (The data should be “00” to “1F”.)
11	D	9E		Press PAUSE button.
12	0	01	00	Set the data.

1-5. LCD SYSTEM ADJUSTMENT

Note 1: The back light (fluorescent tube) is driven by a high voltage AC power supply. Therefore, do not touch the back light holder to avoid electrical shock.

Note 2: When replacing the LCD unit, be careful to prevent damages caused by static electricity.

[Adjusting connector]

Most of the measuring points for adjusting the LCD system are concentrated in CN2105 of the PD-126 board. The following table shows the Pin No. and signal name of CN2105.

Pin No.	Signal Name
1	VG
2	COM
3	GND
4	PSIG
5	HSY

Table 5-1-9.

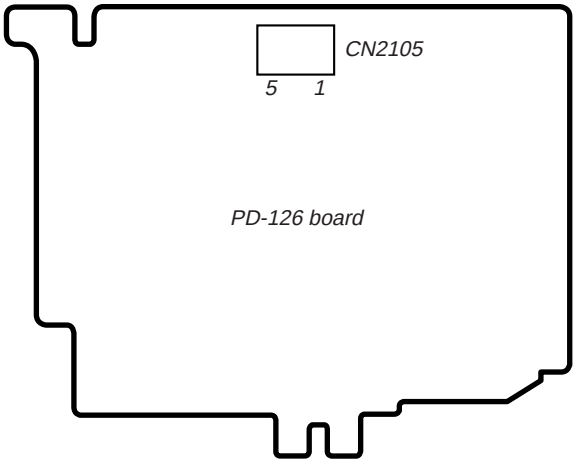

Fig. 5-1-21.

1. VCO Adjustment (PD-126 board)

Set the VCO free-run frequency. If deviated, the LCD screen will be blurred.

Mode	VTR stop
Signal	No signal
Measurement Point	Pin ⑤ of CN2105 (HSY)
Measuring Instrument	Frequency counter
Adjustment Page	D
Adjustment Address	A2, A3
Specified Value	f = 15734 ± 30Hz (NTSC) f = 15625 ± 30Hz (PAL)

Note1: NTSC: DSR-PD150
PAL: DSR-PD150P

Adjusting method:

Order	Page	Address	Data	Procedure
1	0	01	01	Set the data.
2	D	A2		Change the data and set the VCO frequency (f) to the specified value.
3	D	A2		Press PAUSE button.
4	D	A2		Read the data, and this data is named D_{A2}.
5				Convert D_{A2} to decimal notation, and obtain D_{A2}'. (Note2)
6				Calculate D_{A3}' using following equations (Decimal calculation) NTSC model: When $D_{A2}' \leqq 221$ $D_{A3}' = D_{A2}' + 34$ When $D_{A2}' > 221$ $D_{A3}' = 255$ PAL model: When $D_{A2}' \geqq 34$ $D_{A3}' = D_{A2}' - 34$ When $D_{A2}' < 34$ $D_{A3}' = 00$
7				Convert D_{A3}' to a hexadecimal number, and obtain D_{A3}. (Note2)
8	D	A3	D_{A3}	Set the data, and press PAUSE button.
9	0	01	00	Set the data.

Note2: Refer to “Table 5-4-1. Hexadecimal-decimal Conversion Table”.

2. Bright Adjustment (PD-126 board)

Set the D range of the RGB decoder used to drive the LCD to the specified value. If deviated, the LCD screen will become blackish or saturated (whitish).

Mode	VTR stop
Signal	No signal
Measurement Point	Pin ① of CN2105 (VG)
Measuring Instrument	Oscilloscope
Adjustment Page	D
Adjustment Address	A5
Specified Value	A = 7.8 ± 0.05V

Adjusting method:

Order	Page	Address	Data	Procedure
1	0	01	01	Set the data.
2	D	A5		Change the data and set the voltage (A) between the reversed waveform pedestal and non-reversed waveform pedestal to the specified value.
3	D	A5		Press PAUSE button.
4	0	01	00	Set the data.

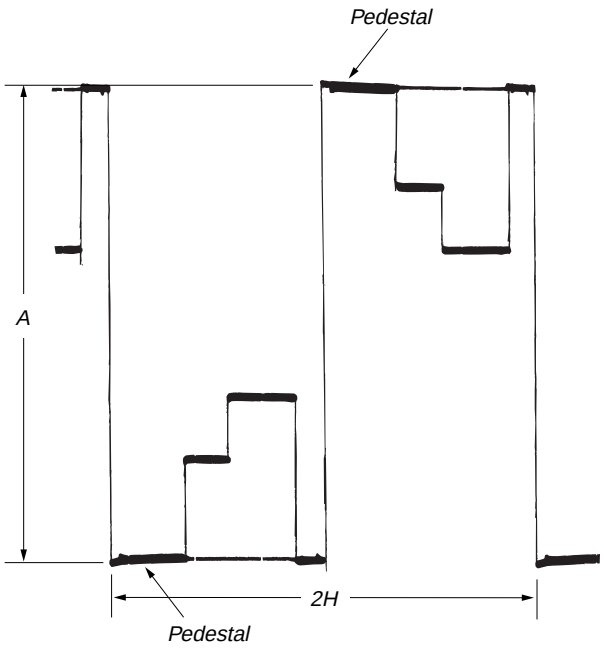

Fig. 5-1-22.

3. Black Limit Adjustment (PD-126 board)

Set the dynamic range of the LCD driver to an appropriate level. If deviated, the LCD screen will become blackish or saturated (whitish).

Mode	VTR stop
Signal	No signal
Measurement Point	Pin ④ of CN2105 (PSIG)
Measuring Instrument	Oscilloscope
Adjustment Page	D
Adjustment Address	A6
Specified Value	A = 8.50 ± 0.05V

Adjusting method:

Order	Page	Address	Data	Procedure
1	0	01	01	Set the data.
2	2	0E	61	Set the data.
3	2	0F		Set the following data. 5B: DSR-PD150 (NTSC) 53: DSR-PD150P (PAL)
4	D	A6		Change the data and set the PSIG signal amplitude (A) to the specified value. (The data should be “00” to “0F”.)
5	D	A6		Press PAUSE button.
6	2	0E	00	Set the data.
7	2	0F	00	Set the data.
8	0	01	00	Set the data.

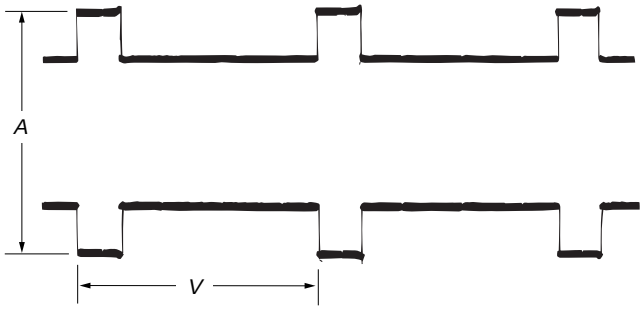

Fig. 5-1-23.

4. Contrast Adjustment (PD-126 board)

Set the level of the VIDEO signal for driving the LCD to the specified value. If deviated, the screen image will be blackish or saturated (whitish).

Mode	VTR stop
Signal	No signal
Measurement Point	Pin ① of CN2105 (VG)
Measuring Instrument	Oscilloscope
Adjustment Page	D
Adjustment Address	AA
Specified Value	A = 3.10 ± 0.05V

Adjusting method:

Order	Page	Address	Data	Procedure
1	0	01	01	Set the data.
2	D	AA		Change the data and set the voltage (A) between the 3 steps peak and pedestal to the specified value. (The data should be “00” to “7F”.)
3	D	AA		Press PAUSE button.
4	0	01	00	Set the data.
5				Check that the specified value of “Bright Adjustment” is satisfied.

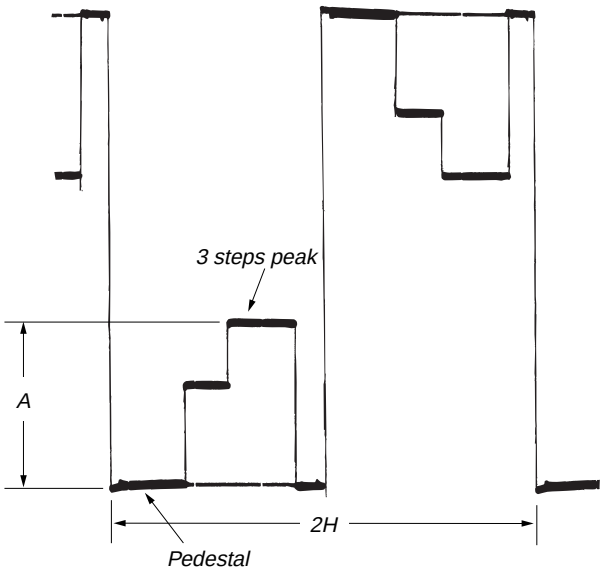

Fig. 5-1-24.

5. Center Level Adjustment (PD-126 board)

Set the video signal center level of LCD panel to an appropriate level.

Mode	VTR stop
Signal	No signal
Measurement Point	Pin ① of CN2105 (VG)
Measuring Instrument	Digital voltmeter
Adjustment Page	D
Adjustment Address	AB
Specified Value	A = 7.00 ± 0.05Vdc

Adjusting method:

Order	Page	Address	Data	Procedure
1	0	01	01	Set the data.
2	3	0C	60	Set the data, and press PAUSE button.
3	3	22	08	Set the data, and press PAUSE button.
4	D	AB		Change the data and set the DC voltage (A) to the specified value. (The data should be “00” to “7F”.)
5	D	AB		Press PAUSE button.
6	3	0C	00	Set the data, and press PAUSE button.
7	3	22	00	Set the data, and press PAUSE button.
8	0	01	00	Set the data.

6. V-COM Adjustment (PD-126 board)

Set the DC bias of the common electrode drive signal of LCD to the specified value.
If deviated, the LCD display will move, producing flicker and conspicuous vertical lines.

Mode	VTR stop
Signal	No signal
Measurement Point	Check on LCD display
Measuring Instrument	
Adjustment Page	D
Adjustment Address	A4
Specified Value	The brightness difference between the section A and section B is minimum.

Note: Perform "Bright Adjustment", "Black Limit Adjustment", "Contrast Adjustment" and "Center Level Adjustment" before this adjustment.

Adjusting method:

Order	Page	Address	Data	Procedure
1	0	01	01	Set the data.
2	D	B0		Write down the data.
3	D	B0	CA	Set the data, and press PAUSE button.
4	D	A4		Change the data so that the brightness of the section A and that of the section B is equal. (The data should be "80" to "BF".)
5	D	A4		Subtract 2 from the data.
6	D	A4		Press PAUSE button.
7	D	B0		Write the data that was written down in the step 2.
8	D	B0		Press PAUSE button.
9	0	01	00	Set the data.

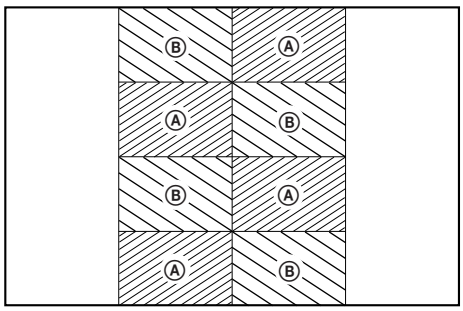

Fig. 5-1-25.

7. White Balance Adjustment (PD-126 board)

Correct the white balance.
If deviated, the reproduction of the LCD screen may degenerate.

Mode	VTR stop
Signal	No signal
Measurement Point	Check on LCD screen
Measuring Instrument	
Adjustment Page	D
Adjustment Address	A8, A9
Specified Value	The LCD screen should not be colored.

Note1: Check the white balance only when replacing the following parts. If necessary, adjust them.
1. LCD panel
2. Light induction plate
3. IC2101

Note2: Use the AC power adaptor.

Adjusting method:

Order	Page	Address	Data	Procedure
1	0	01	01	Set the data.
2	D	A8	85	Set the data, and press PAUSE button.
3	D	A9	75	Set the data, and press PAUSE button.
4	D	A9		Check that the LCD screen is not colored. If not colored, proceed to step 10.
5	D	A8		Change the data so that the LCD screen is not colored.
6	D	A8		Press PAUSE button.
7	D	A9		Change the data so that the LCD screen is not colored.
8	D	A9		Press PAUSE button.
9	D	A9		If the LCD screen is colored, repeat steps 5 to 9.
10	0	01	00	Set the data.

5-2. MECHANICAL SECTION ADJUSTMENT

2-1. PARTS REPLACEMENT AND PREPARATION FOR ADJUSTMENT

• About Mode Selector II

2-1-1. Outline

This unit is a mechanism drive tool which supplements the maintenance of each mechanism deck. Its functions are described below.

1. Manual test

A mode which drives the motor only while the switch is ON. It enables the operator to control the motor as desired.

2. Step test

A mode which drives the motor until the current condition detected by the sensor changes to another condition. It enables the movements made by the motor in each operation to be controlled while being checked.

3. Auto test

A mode that checks if the mechanism operates normally according to the condition shift table recorded in the unit for each mechanism deck. All the conditions of the decks are checked through a series of operations.
An error message is displayed if incorrect shifts and conditions are detected and operations are stopped.

2-1-2. Mechanism Condition (Position) Shifting Order List

After selecting the mechanism deck, select one of the two test modes other than the auto test, and press the RVS and FF button to specify the mechanism state (position).

Code \ MD name					C mechanism
A	B	C	D		
1	1	1	0	1	EJECT
1	0	1	0	2	ULE
1	0	1	1	3	SR
1	0	0	1	4	HL
0	1	1	1	5	LE
0	0	1	1	6	STOP
1	1	0	1	7	RP
1	1	0	0	8	REW

2-1-3. Mode Selector II (A-6082-282-A) Connection

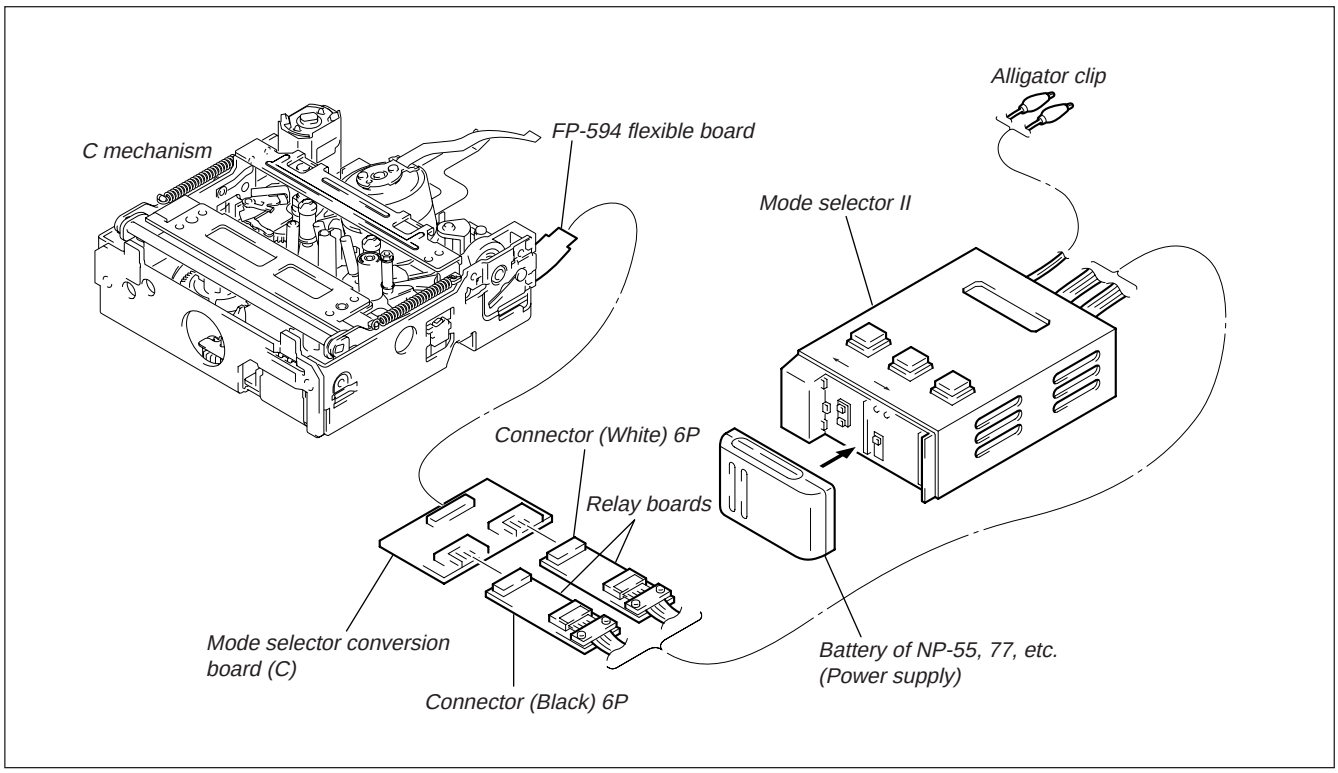

2-1-4. The Mechanical Adjustment Requires the Following Tools

1) Cleaning fluid (Y-2031-001-0)
2) Wiping cloth (7-741-900-53)
3) Super fine applicator
   (Made by NIPPON APPLICATOR (P752D))
4) Mirror (Small oval type) (J-6082-840-A)
5) Screwdriver for tape path (J-6082-026-A)
6) Torque driver (J-9049-330-A)
7) TG1 adjustment jig (FWD position adjustment)
   (J-6082-420-A)
8) Mode selector conversion board (C) (J-6082-417-A)
9) Tracking tape (XH2-1A1) (NTSC/PAL) (8-967-999-03)
10) Mini DV torque cassette (J-6082-360-A)
11) Mode selector Ⅱ (J-6082-282-A)
12) Mode selector Ⅱ ROM (Corresponds to C mechanism)
    (J-6082-314-D)
13) Bending stick (J-6082-419-A)

Screw tightening torque tolerance.
0.0098 N.m (0.1 kg.cm)

2-2. PARTS REPLACEMENT

Precautions

For details on removing the cabinet and board, refer to "2. DISASSEMBLY". For details on the replacement of mechanism parts (removal or attaching), refer to the respective flowcharts, and perform the procedure given.

2-2-1. Tape Fall Stopper, HC Roller and HC Arm

Removing method: Spread out the left and right attaching parts and remove them upwards.
Attaching method: Refer to the Details diagram.

Details diagram on attachment of tape fall stopper

The left and right attaching parts are fixed to the chassis.

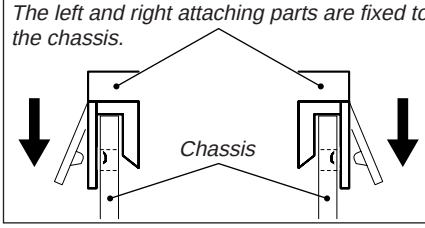

Details diagram on removal and attachment of HC arm and HC roller

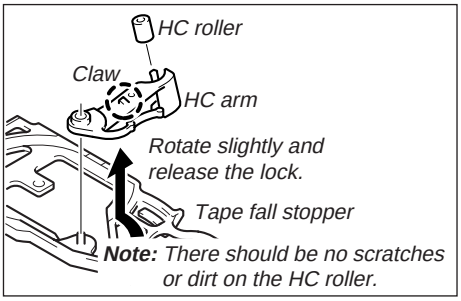

Note: *There should be no scratches or dirt on the HC roller.*

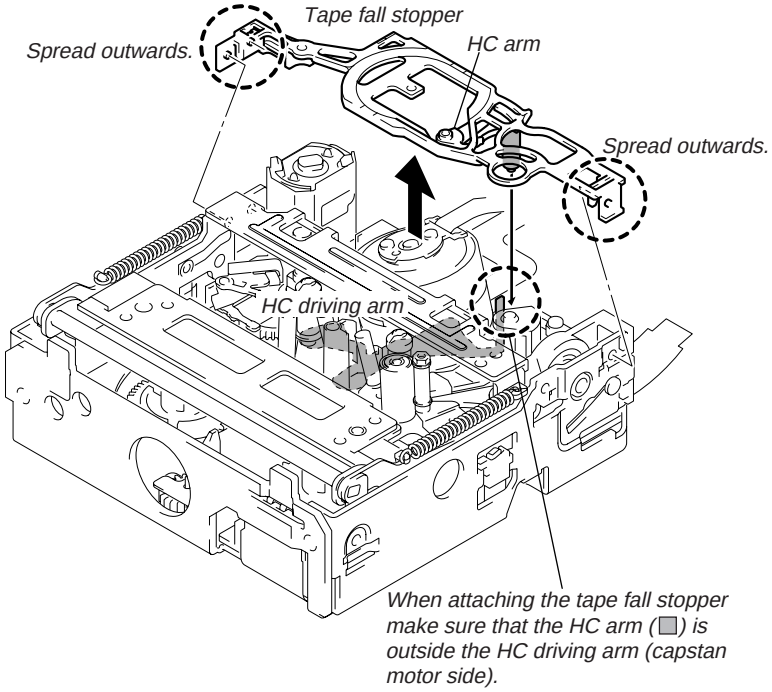

2-2-2. Drum Assembly and Drum Base Block Assembly

Remove the

"2-2-1. Tape Fall Stopper"

Removing method: Remove in the order of ①➡②➡③➡④.
Attaching method: Attach in the order of ④➡③➡②➡①.
Note: Tighten the screws in the order of Ⓐ, Ⓑ, and Ⓒ.)
After attaching all the parts, refer to the flowchart on page 5-50, and perform the adjustments from Starting adjustments-2.

Holding the drum assembly

Insert your second finger between the two flexible boards, and hold the top and bottom boards.

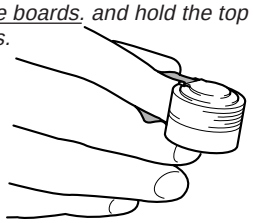

Note: *Do not touch the running face of the drum assembly.*

Details diagram on attachment of drum assembly (Positioning pins)

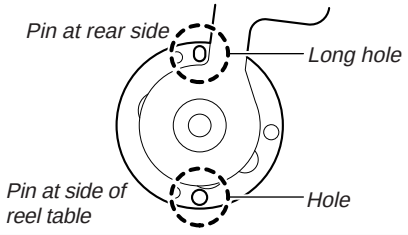

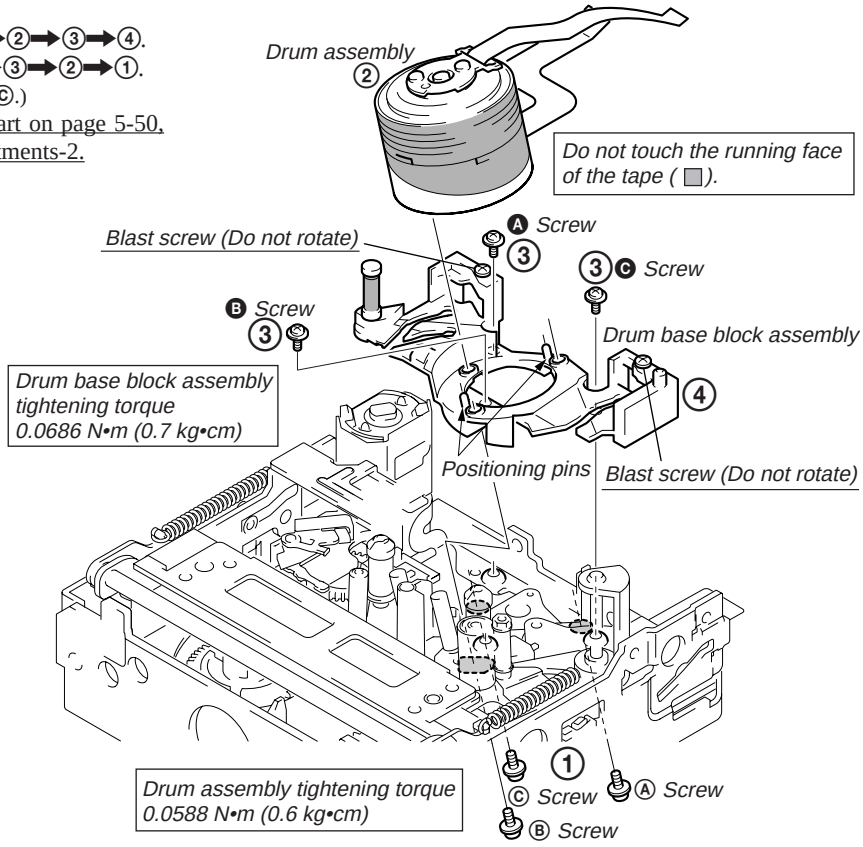

2-2-3. Damper Assembly, Cassette Compartment Assembly and Extension Spring

Remove the

"2-2-1. Tape Fall Stopper"

Removing method: Remove in the order of ①➡②➡③➡④➡⑤.

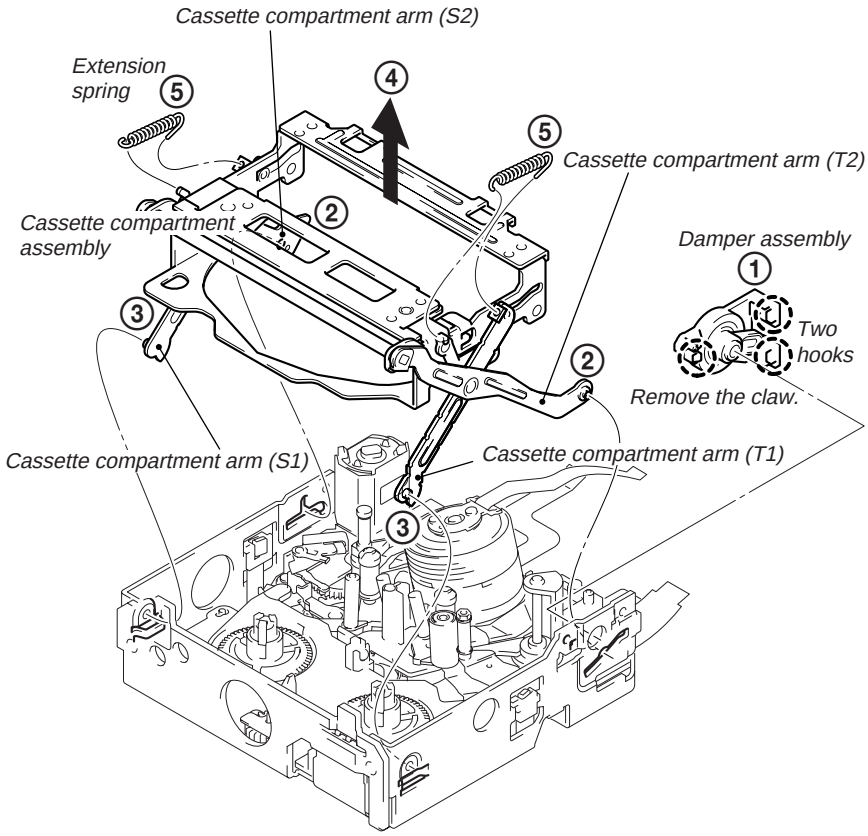

Details diagram on removal of cassette compartment assembly

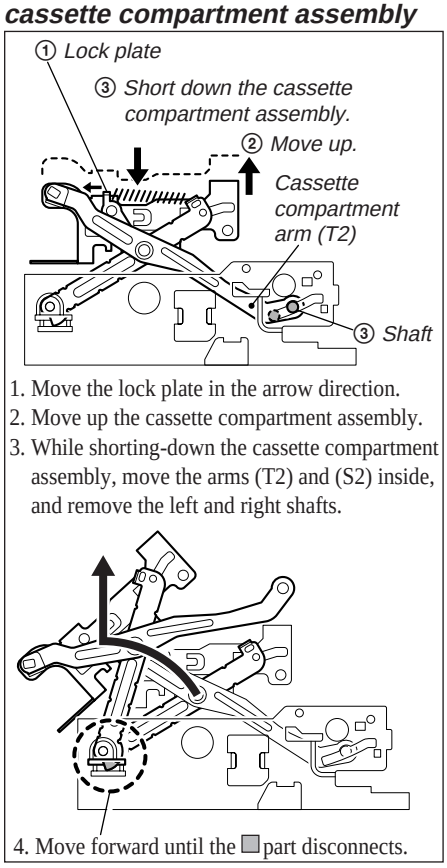

Attaching method: Attach in the order of ①➡②➡③➡④.

Note: Be careful not to deform the cassette compartment.

1. Insert the left and right shafts of the cassette compartment arms (S1) and (T1) into the chassis.
2. Push down the cassette compartment assembly in the direction of arrow ②.
3. Insert the left and right shafts of the cassette compartment arms (S2) and (T2) into the chassis.
4. Attach the damper assembly.
5. Attach the two extension springs.

Details diagram on attachment of damper assembly

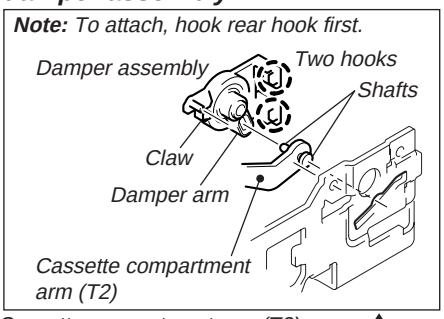

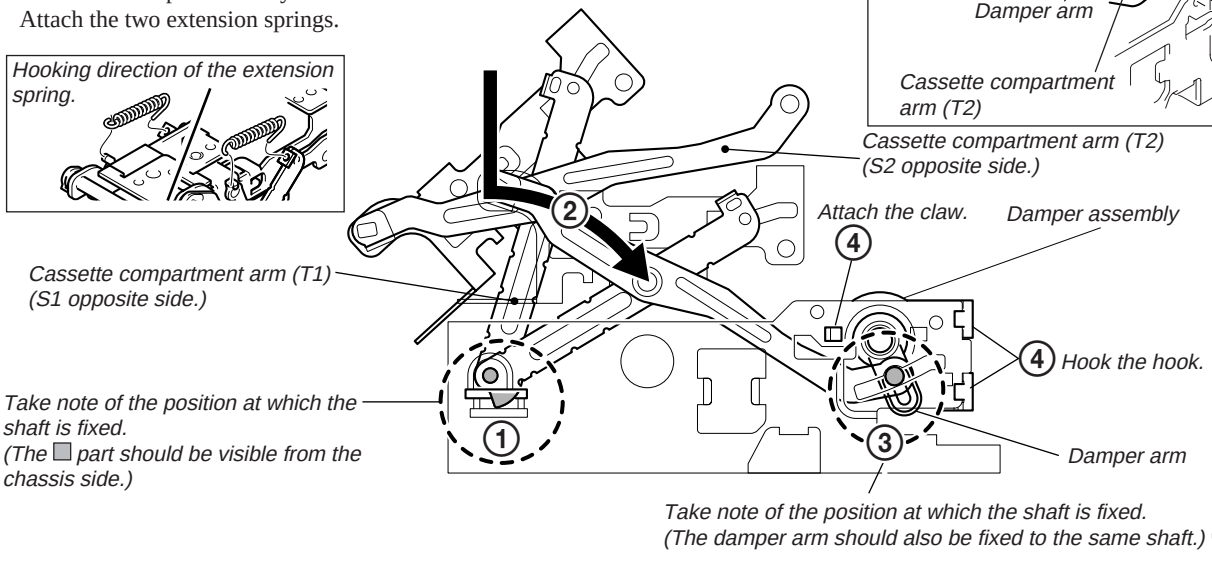

Screw tightening torque tolerance.
0.0098 N.m (0.1 kg.cm)

2-2-4. Reel Table (S) / Reel Table (T) Assembly

Remove the

"2-2-1. Tape Fall Stopper"

and "2-2-3. Damper Assembly and Cassette Compartment Assembly"

Removing method: Remove in the order of ①➡②➡③➡④.
Attaching method: Attach in the order of ②➡①➡④➡③.
After attaching all the parts, refer to the flowchart on page 5-50, and perform the adjustments from Starting adjustments-1.

Details diagram on removal of reel table (S) assembly

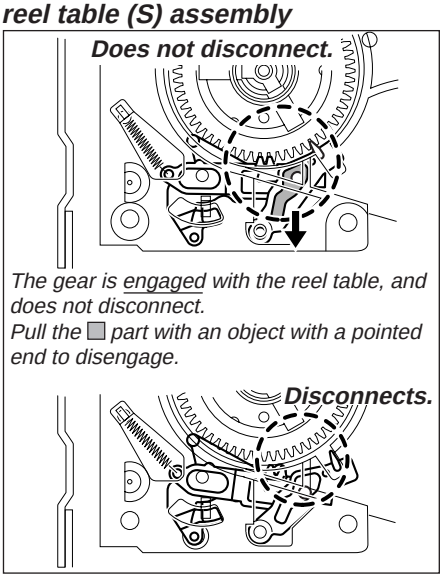

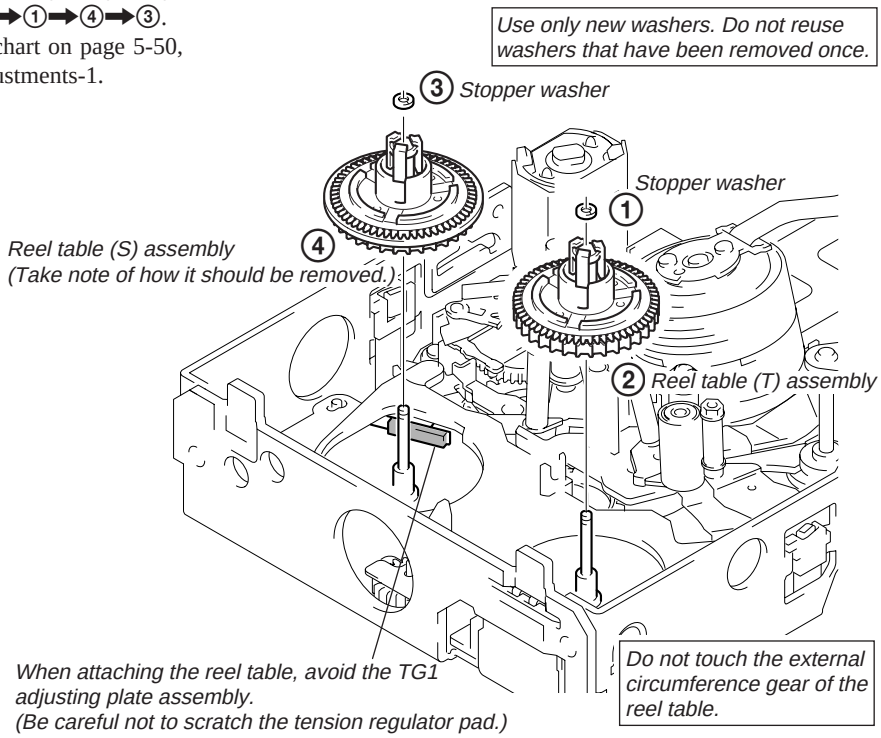

2-2-5. Cassette Base Block Assembly, Gooseneck Gear Assembly and Relay Gear

Remove the

"2-2-1. Tape Fall Stopper"

and "2-2-3. Damper Assembly and Cassette Compartment Assembly"

Removing method: Remove in the order of ①➡②➡③➡④➡⑤➡⑥.
Attaching method: Attach in the order of ⑥➡⑤➡④➡③➡②➡①.

Details diagram on removal and attachment of LED

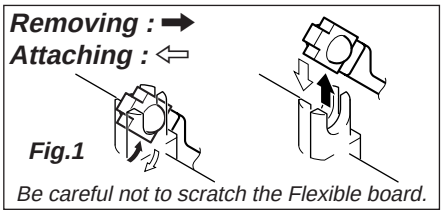

Details diagram on State Checking of Brake (S)

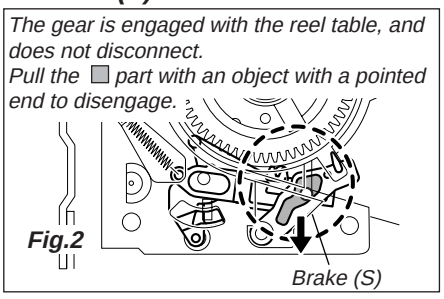

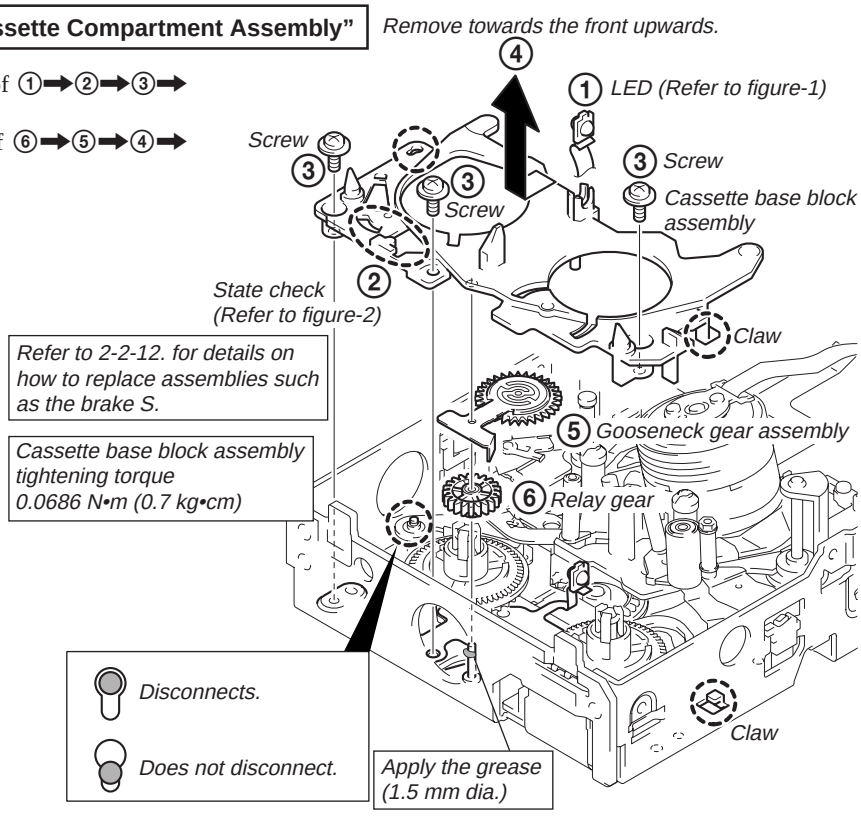

Screw tightening torque tolerance.
0.0098 N.m (0.1 kg.cm)

2-2-6. TG1 Adjustment Plate Assembly, Tension Coil Spring (TG1), TG1 Arm Assembly, TG7 Retainer Spring and TG7 Arm Block Assembly

Remove the

"2-2-1. Tape Fall Stopper"

"2-2-3. Damper Assembly and Cassette Compartment Assembly"

and "2-2-5. Cassette Base Block Assembly"

Removing method: Remove the desired parts as shown in the figure.
Attaching method: Refer to the detailed diagrams.
After attaching all the parts, refer to the flowchart on page 5-50, and perform the adjustments from Starting adjustments-1.

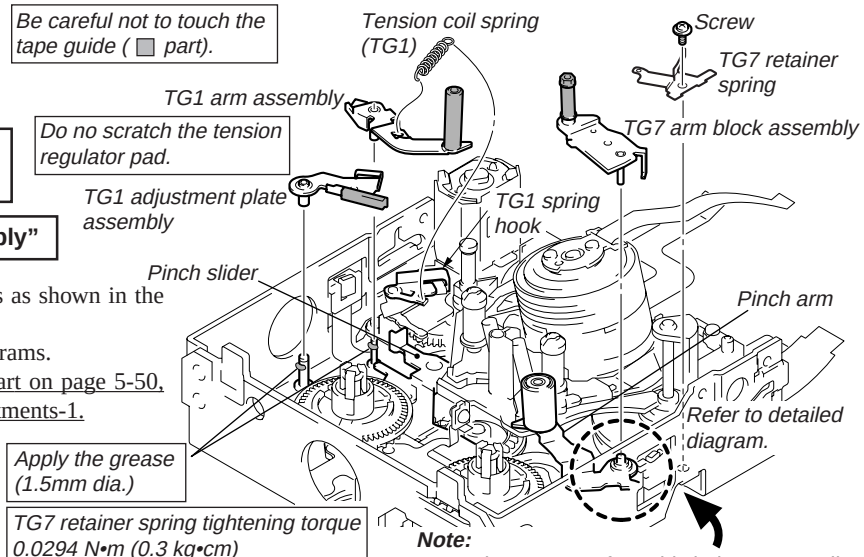

Details diagram on attachment of TG1 arm assembly

Attach so that the TG1 flange is almost parallel to the TG3 flange.

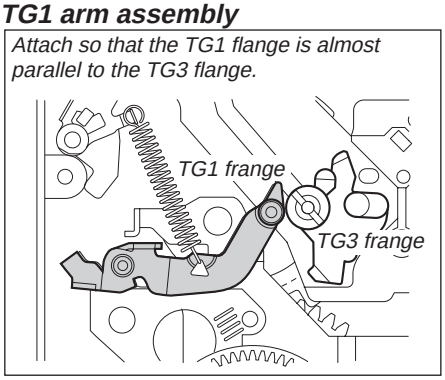

Details diagram on removal and attachment of TG7 arm block assembly

Remove the tension of the spring attached to the TG7 arm. To attach, temporarily attach the spring to the pinch arm from the chassis hole using a pair of tweezers.

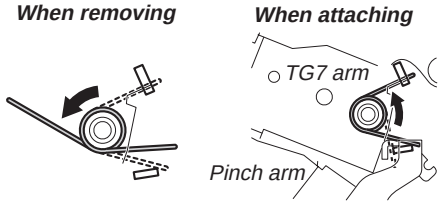

2-2-7. Brake Slider Assembly, Pinch Slider Assembly and Cam Gear

Remove the

"2-2-1. Tape Fall Stopper"

"2-2-3. Damper Assembly and Cassette Compartment Assembly"

"2-2-4. Reel Table (S) / Reel Table (T) Assembly"

"2-2-5. Cassette Base Block Assembly, Gooseneck Gear Assembly and Relay Gear"

and "2-2-6. TG1 Arm Assembly and TG1 Adjustment Plate Assembly"

Removing method: Remove in the order of ①➡②➡③➡④.
Attaching method: Attach in the order of ④➡③➡②➡①.
(Be sure to adjust the position and phase.)

Details diagram on removal and attachment of reel base

Removing method: Move upwards in the direction of arrow Ⓐ.
Attaching method: Attach in the order of ①➡②.

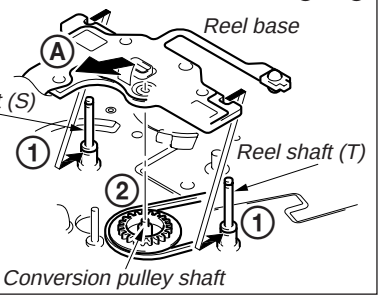

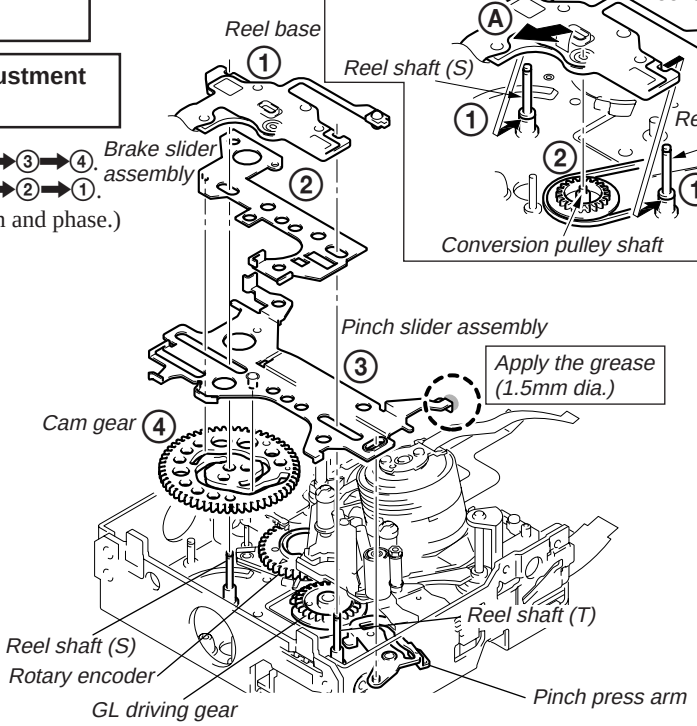

Detailed diagram on the adjusting the phase of each gear, and parts to be greased.

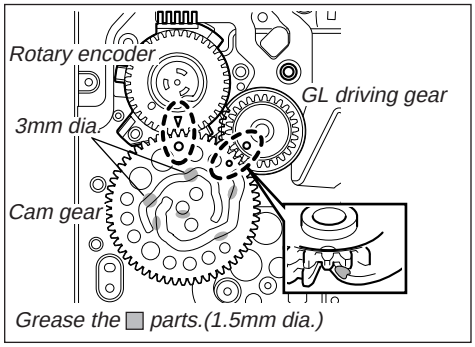

Screw tightening torque tolerance.
0.0098 N.m (0.1 kg.cm)

2-2-8. Pinch Arm Assembly, Torsion Spring (TG7LD), Pinch Press Arm and Eject Arm

Remove the

"2-2-1. Tape Fall Stopper"
"2-2-3. Damper Assembly and Cassette Compartment Assembly"
"2-2-4. Reel Table (S) / Reel Table (T) Assembly"
"2-2-5. Cassette Base Block Assembly, Gooseneck Gear Assembly and Relay Gear"
"2-2-6. TG1 Arm Assembly, TG1 Adjustment Plate Assembly and TG7 Arm Block Assembly"
and "2-2-7. Brake Slider Assembly and Pinch Slider Assembly"

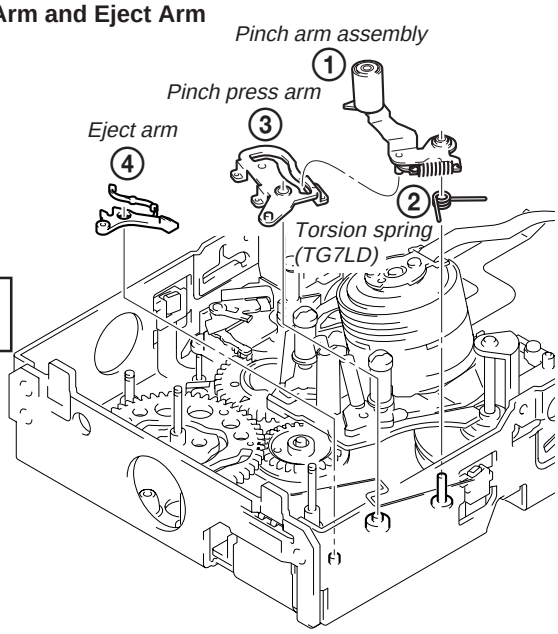

Removing method: Remove in the order of ①➡②➡③➡④.
Attaching method: Attach in the order of ④➡③➡②➡①.
(Be sure to adjust the position and phase.)

Details diagram on attachment of pinch arm assembly and torsion spring (TG7LD)

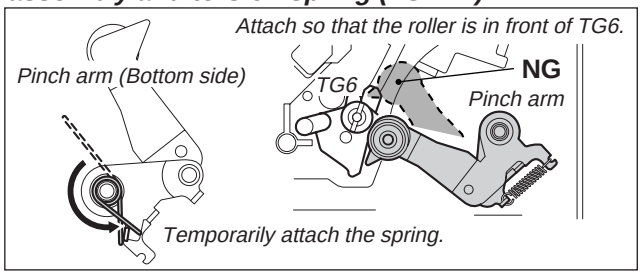

Details diagram on adjustment or position and phase

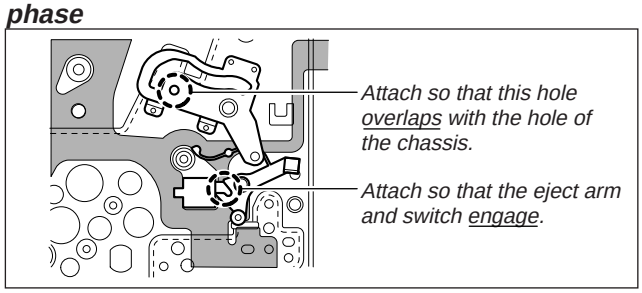

2-2-9. GL Block Assembly, GL Driving Gear and HC Driving Arm

Remove the

"2-2-1. Tape Fall Stopper"
"2-2-3. Damper Assembly and Cassette Compartment Assembly"
"2-2-2. Drum Assembly and Drum Base Block Assembly"
"2-2-4. Reel Table (S) / Reel Table (T) Assembly"
"2-2-5. Cassette Base Block Assembly, Gooseneck Gear Assembly and Relay Gear"
"2-2-6. TG1 Arm Assembly, TG1 Adjustment Plate Assembly and TG7 Arm Block Assembly"
"2-2-7. Brake Slider Assembly, Pinch Slider Assembly and Cam Gear"
and "2-2-8. Pinch Arm Assembly"

Removing method: Remove in the order of ①➡②➡③➡④.
Attaching method: Attach in the order of ④➡③➡②➡①.
(Be sure to adjust the position and phase.)
After attaching all the parts, refer to the flowchart on page 5-50, and perform the adjustments from Starting adjustments-1.

Details diagram on adjustment of position and phase

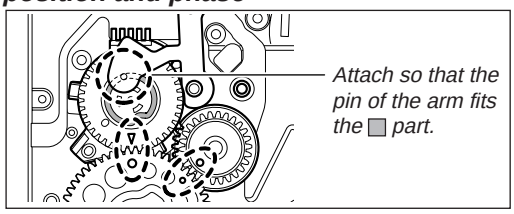

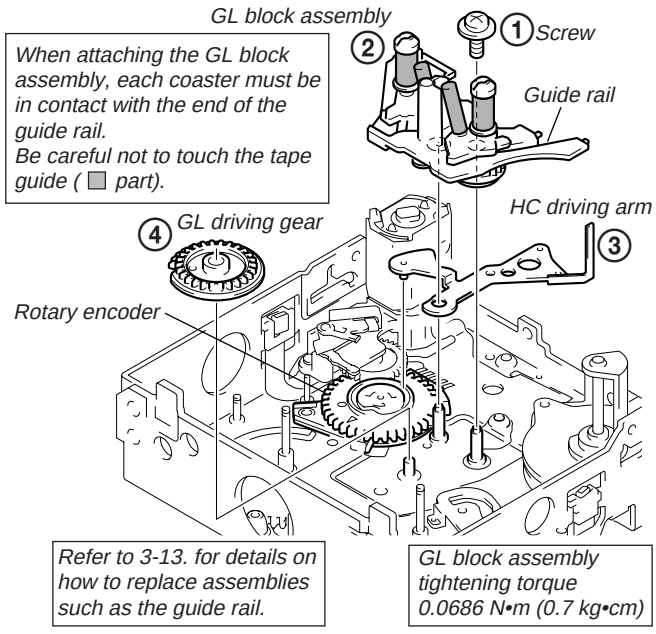

When attaching the GL block assembly, each coaster must be in contact with the end of the guide rail.
Be careful not to touch the tape guide (■ part).

Screw tightening torque tolerance.
0.0098 N.m (0.1 kg.cm)

2-2-10. Capstan Motor, Conversion Pulley, Timing Belt and Holder

Remove the

"2-2-1. Tape Fall Stopper"

"2-2-3. Damper Assembly and Cassette Compartment Assembly"

"2-2-2. Drum Assembly and Drum Base Block Assembly"

"2-2-4. Reel Table (S) / Reel Table (T) Assembly"

"2-2-5. Cassette Base Block Assembly, Gooseneck Gear Assembly and Relay Gear"

"2-2-6. TG1 Arm Assembly, TG1 Adjustment Plate Assembly, TG7 Arm Block Assembly and TG7 Retainer Spring"

"2-2-7. Brake Slider Assembly and Pinch Slider Assembly"

"2-2-8. Pinch Arm Assembly and Pinch Press Arm"

and "2-2-9. GL Block Assembly"

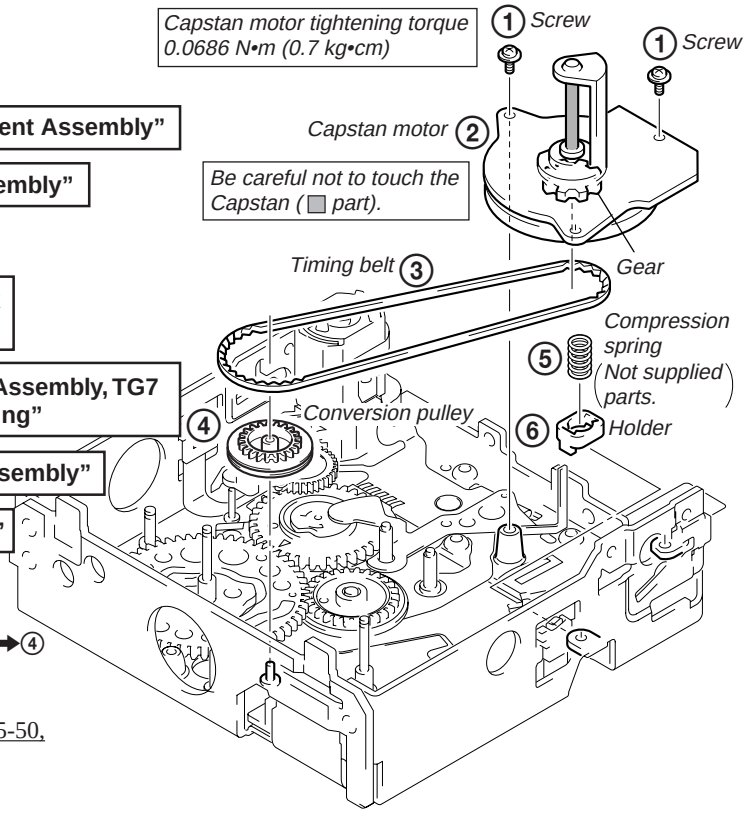

Removing method Remove in the order of ①➡②➡③➡④➡⑤➡⑥.

Attaching method: Refer to the following diagram.

After attaching all the parts, refer to the flowchart on page 5-50, and perform the adjustments from Starting adjustments-1.

Attachment of Timing Belt

1. Refer to "Removing method", and attach the compression spring (TG7) and holder to the chassis.
2. Attach the timing belt to the capstan motor and the conversion pulley.

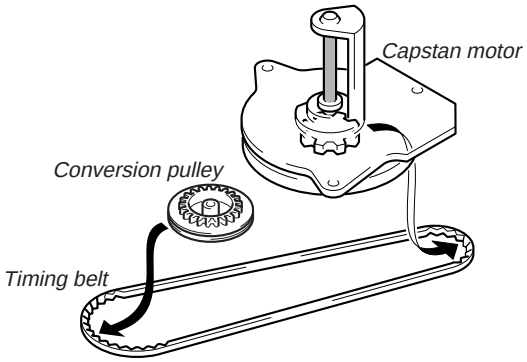

3. Attach the conversion pulley to the conversion pulley shaft. Attach the capstan motor to the chassis.
4. Secure the capstan motor with the screw.

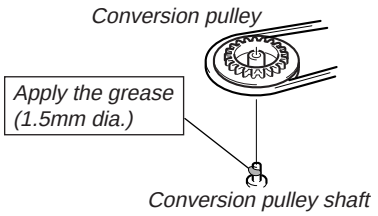

5. After attaching, pull the timing belt lightly, and check that the movements of the conversion pulley and gear at the back of the capstan motor are linked.

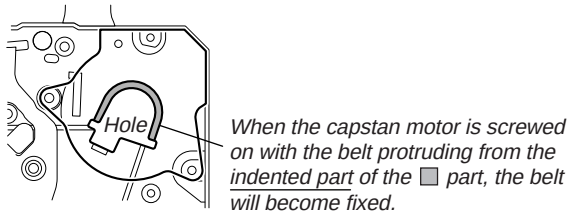

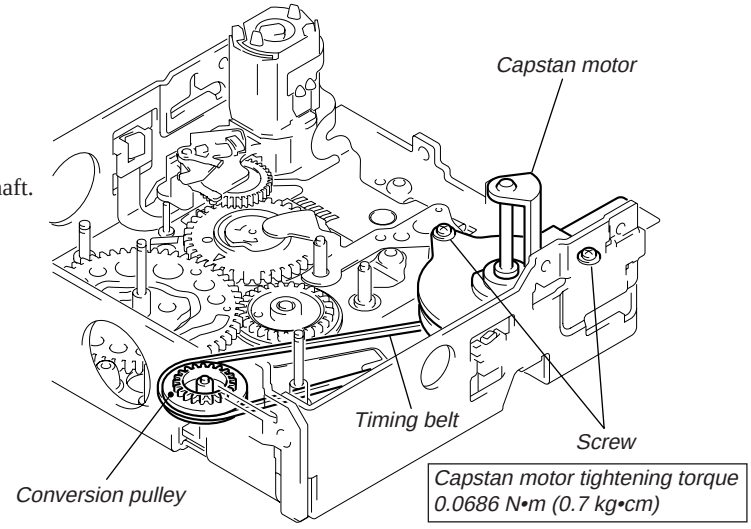

Screw tightening torque tolerance.
0.0098 N.m (0.1 kg.cm)

2-2-11. L Motor Block Assembly and FP-594 Flexible Board

First, remove

all parts from 2-2-1 to 2-2-10

Removing method: Remove in the order of ①➡②➡③➡④➡⑤➡⑥➡⑦➡⑧.

(For details on how to remove each part, refer to the detailed diagram.)

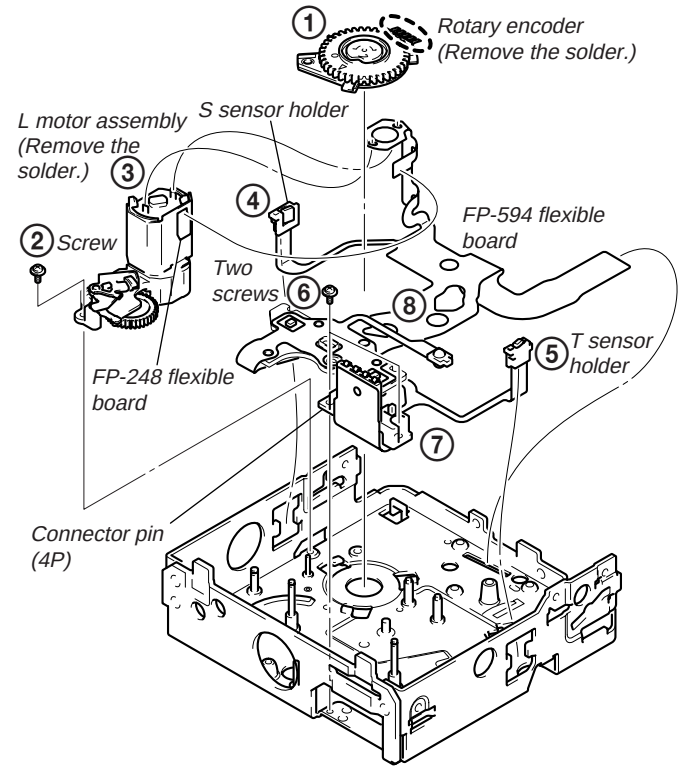

Attaching method:

Refer to the following diagram, for attaching the FP-594 flexible board, and attaching the parts in the order of ①➡②➡③➡④➡⑤➡⑥➡⑦➡⑧.

(For attaching each part, refer to each detailed diagram.)

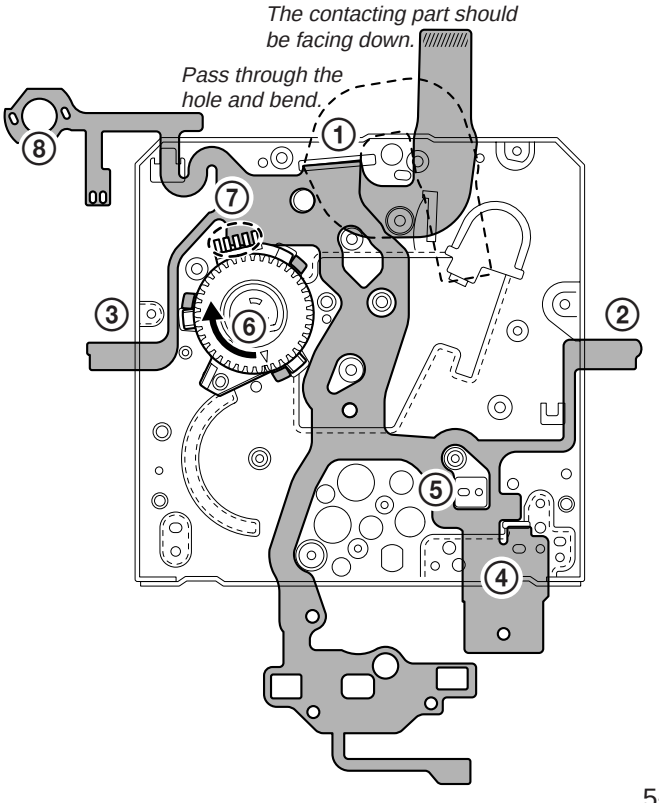

Detailed diagram on removal and attachment of rotary encoder

Removing method:
Remove the solder, and rotate the rotary encoder in the ⬅ direction. (The three parts of part Ⓐ should be visible.)

Attaching method:
Rotate the rotary encoder in the ⇦ direction. (The three parts of part Ⓐ should be hidden.) And then solder.

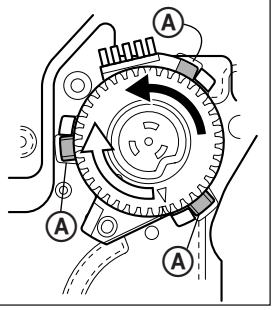

Detailed diagram on removal and attachment of L motor block assembly

Solder the four parts of the flexible board.

Tightening torque
0.0686 N•m (0.7 kg•cm)

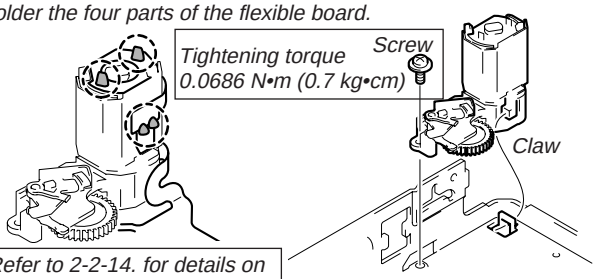

Refer to 2-2-14. for details on how to replace assemblies such as the TG1 spring hook.

Detailed diagram on removal and attachment of sensor holder (S) / (T)

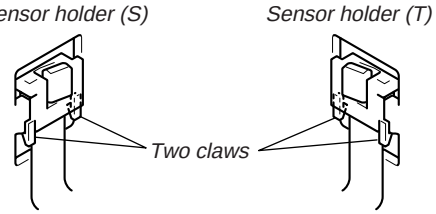

Detailed diagram on removal and attachment of Connector Pin (4P)

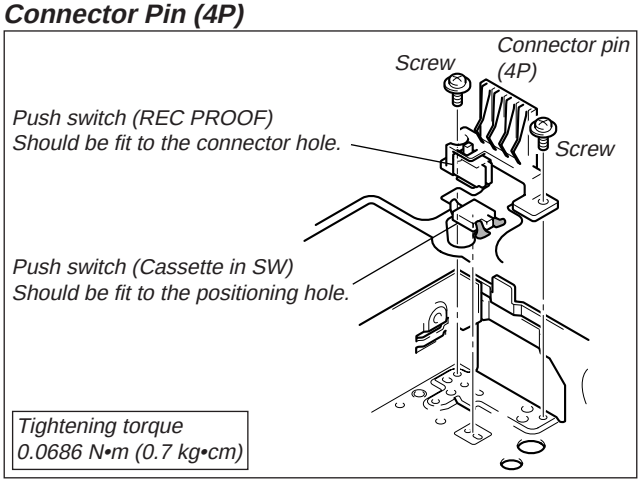

2-2-12. Reset Arm (S), Brake (S), Brake Rack (S), Brake (T), Brake Gear (T), Brake Spring (T) and Extension Spring

Removal or attaching method

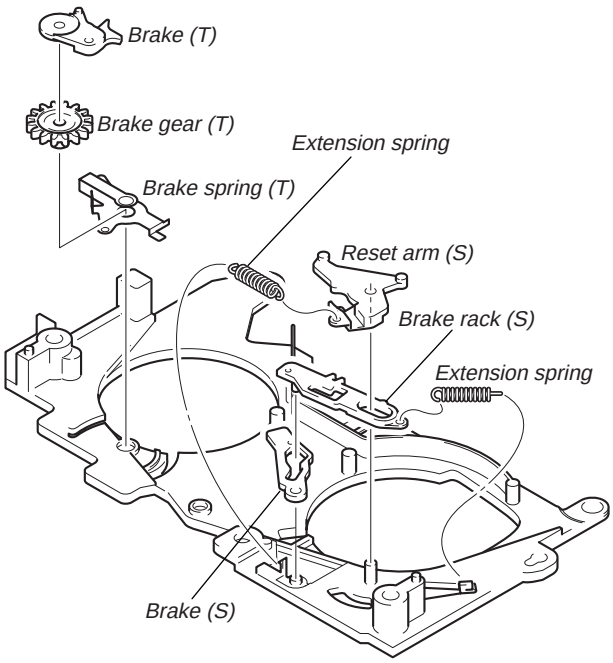

Detailed diagram on removal and attachment of brake (T), brake gear (T) and brake spring (T)

Attaching method:
Insert the brake gear (T) into the brake spring (T), and slide the brake (T) to attach. (Remove in the reverse order.)

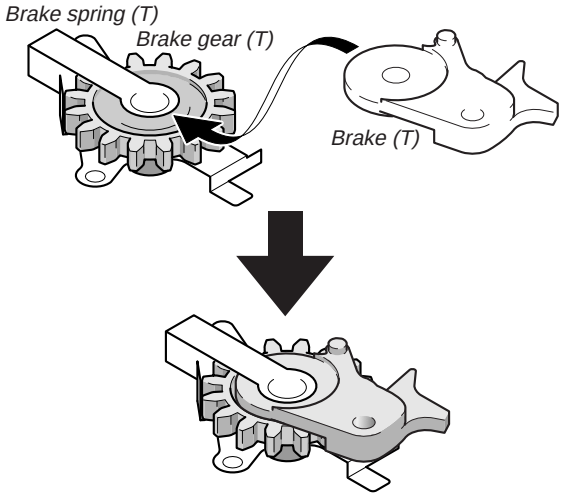

Note: *Be careful not to deform the brake spring (T).*

Removal and attachment of Brake (S), Brake Rack (S) and Extension Spring

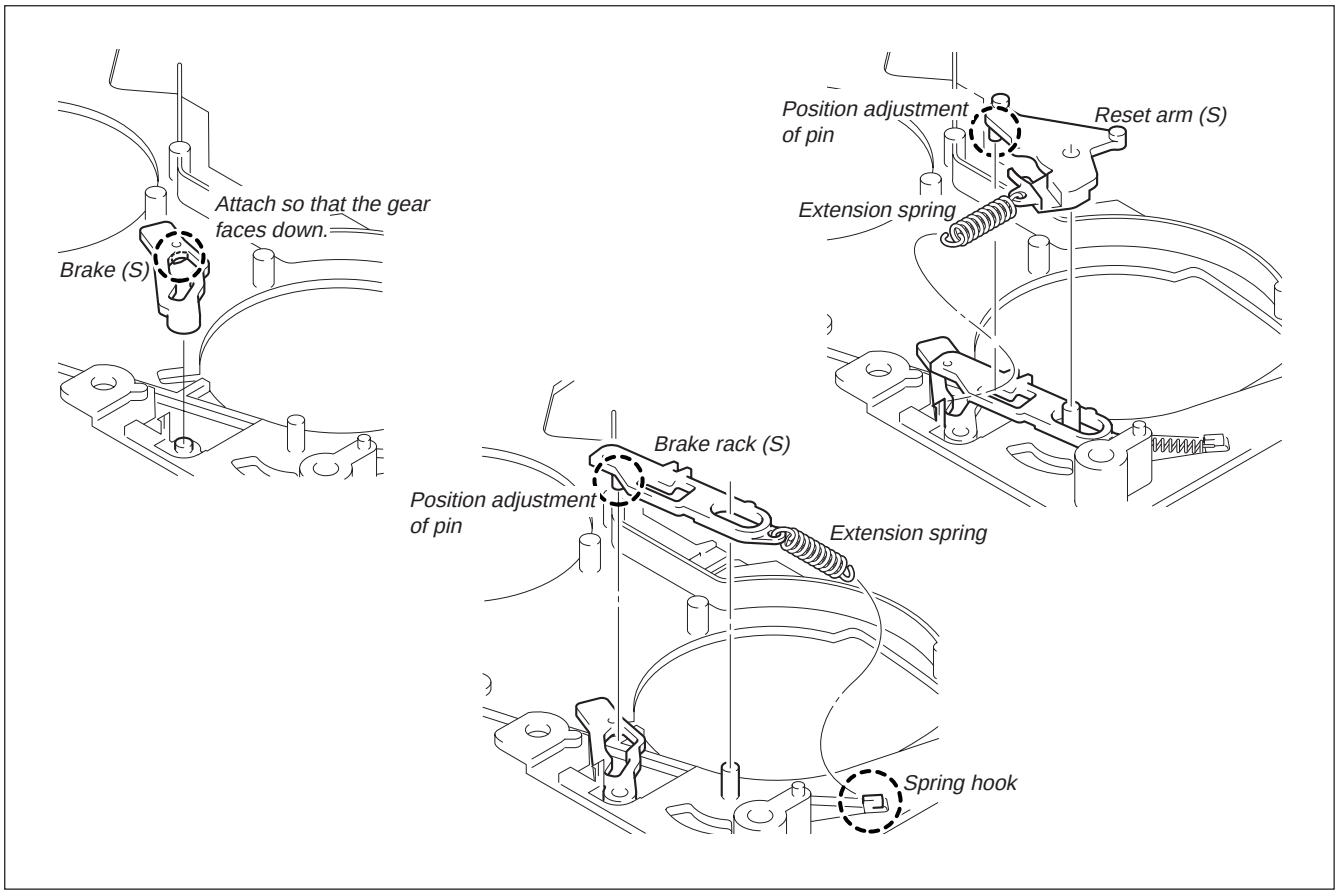

2-2-13. Coaster (S) / (T) Assembly, GL Arm (S) / (T) Assembly, Guide Rail, GL Gear (S) / (T) and Torsion Spring (GLS) / (GLT)

Removing method

• Refer to the detailed diagram on the right, and remove each part.

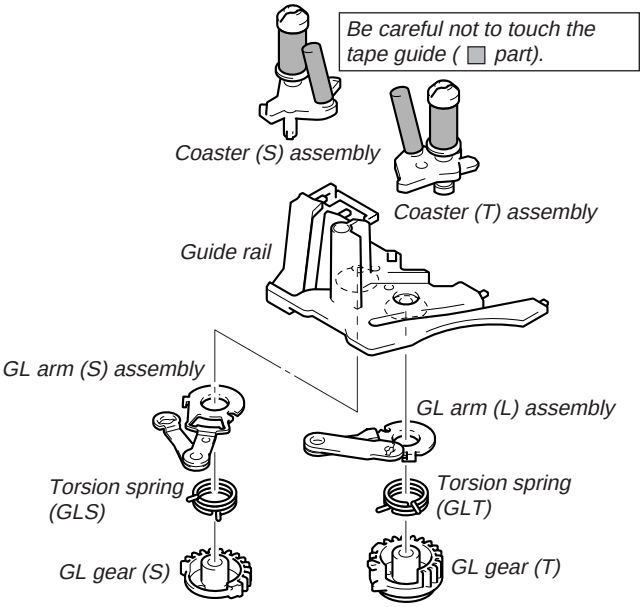

Detailed diagram on removal of GL arm (S) / (T) assembly

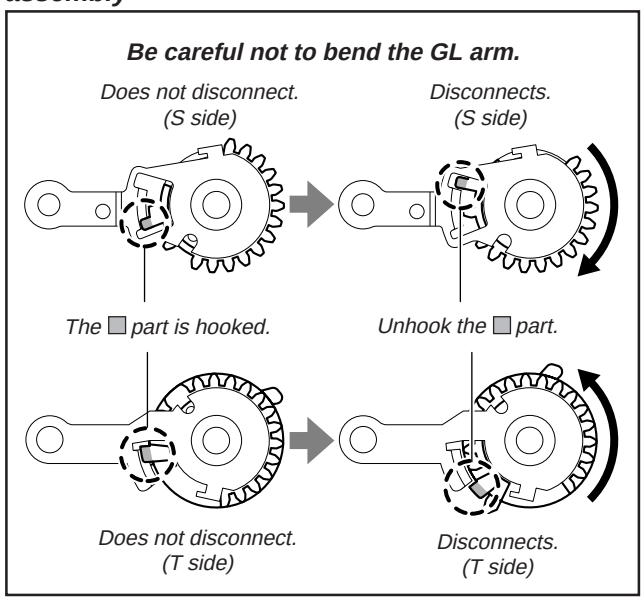

Assembling the GL Block Assembly

1. Attach the tension coil spring to each gear.
   To differentiate the S side and T side, the side with more coils is the T side. The S side has less coils. Face the ends of the spring towards you, the tip of the coil (lower side) is positioned at the right for the S side and at the left for the T side.

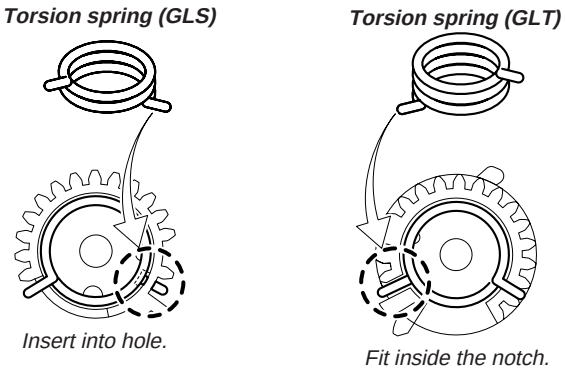

2. Hook the spring to the GL arm, and rotate in the ➡② direction until the claw of the GL arm passes over the ■ part, and the ■ becomes visible. When the GL arm is completely inserted, the GL arm claw will pass below the ■ part by the tension of the spring (➡③).

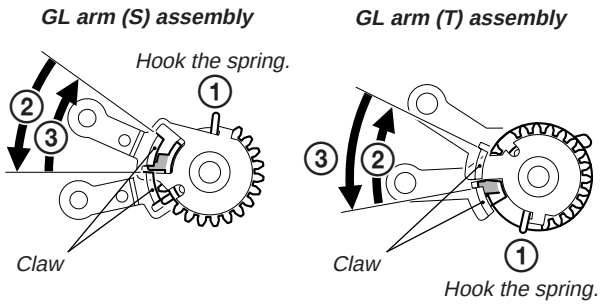

3. Attach the respective coaster assemblies.

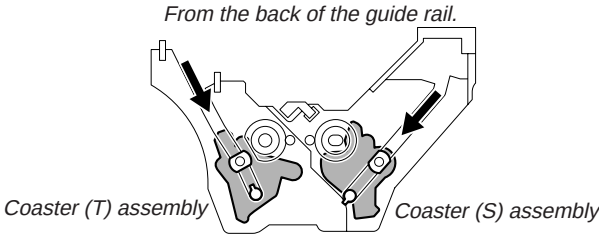

4. Attach the GL gear block assembly in the order of the S and T sides.

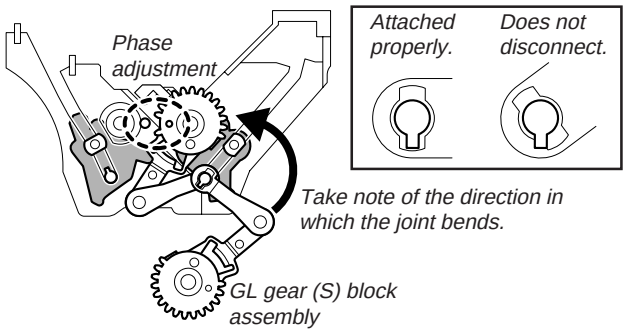

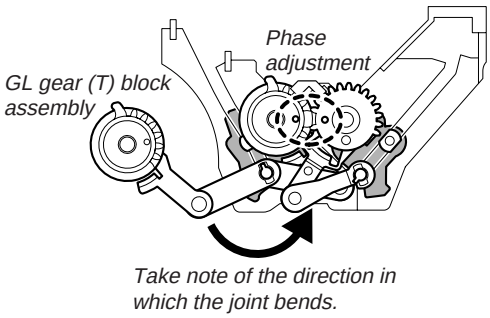

2-2-14. L Motor Assembly, Motor Shield, FP-248 Flexible Board, TG1 Spring Hook, Spring Hook Fulcrum Base, Spring Hook Driving Arm, Worm Shaft, Deceleration Gear and Motor Holder

Removing method

• Refer to the detailed diagram on the right, and remove each part.

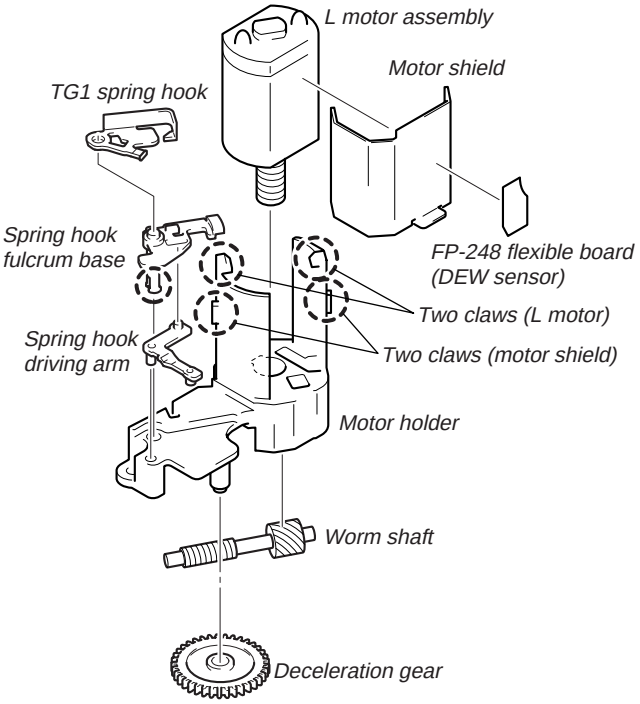

Removal of TG1 spring hook

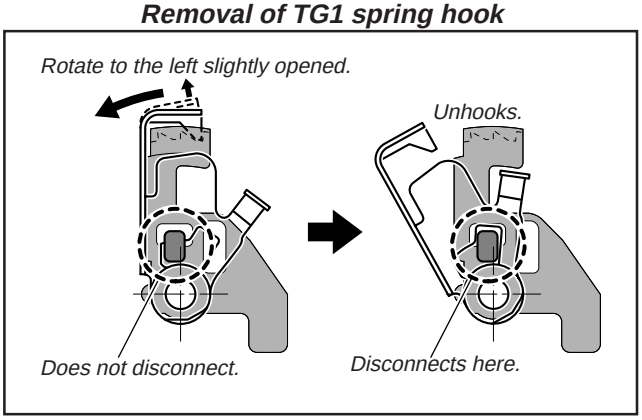

Removal of motor shield and worm shaft

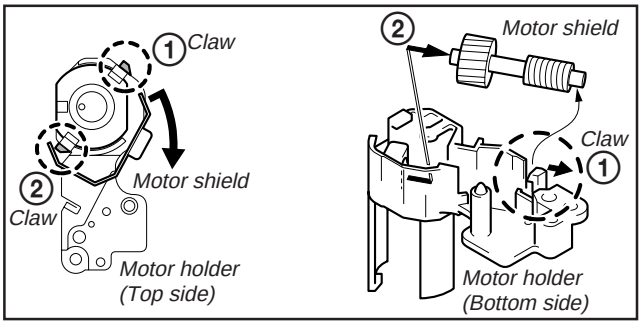

Attaching method

1. Attach the worm shaft.

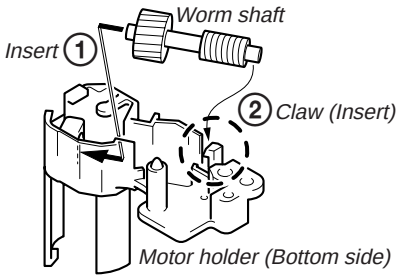

2. Attach the L motor assembly, motor shield and deceleration gear.

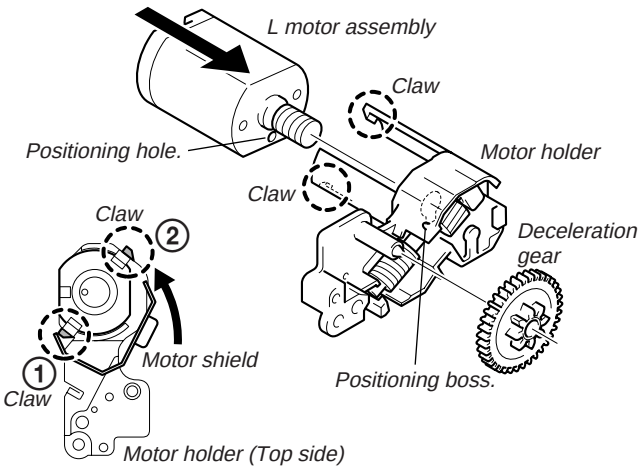

3. Attach the TG1 spring hook to the spring hook fulcrum base.

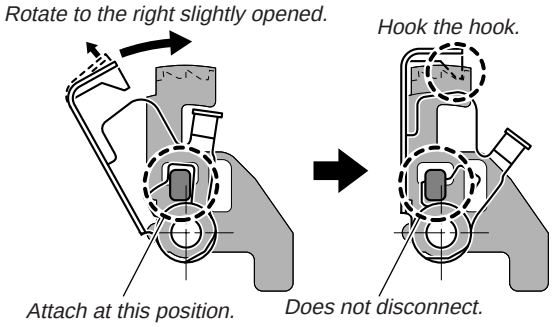

4. Attach the spring hook driving arm and spring hook fulcrum base.

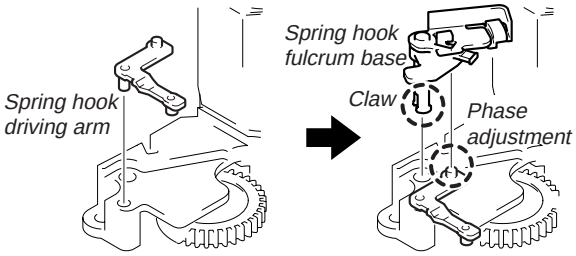

5. Grease the ■ part.

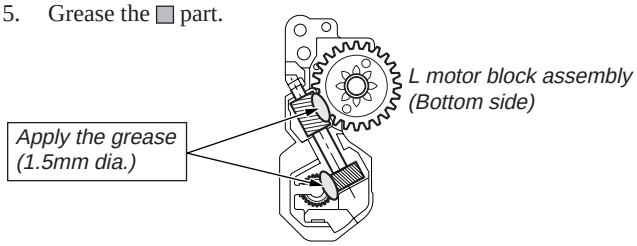

2-3. CHECK AND ADJUSTMENT

• When the parts of the tape path (tape guide and reel table, etc.) have been removed or parts have been replaced, adjust the following parts and according to the flowchart below.

• ADJUSTMENT POSITION

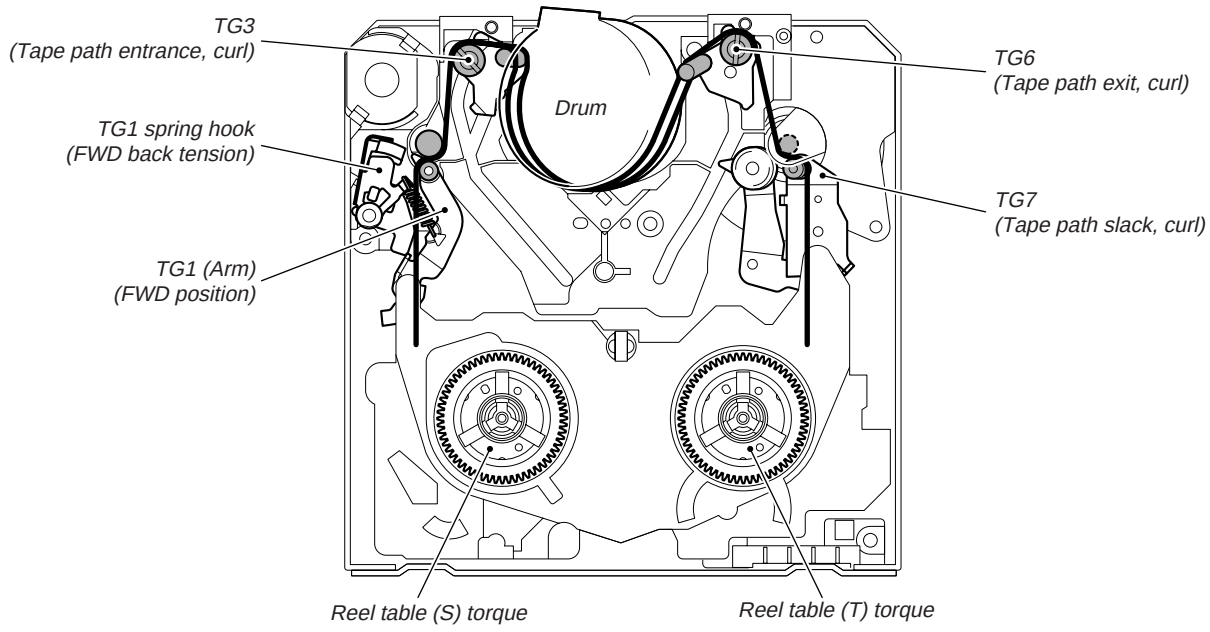

• ADJUSTMENT ORDER (Flowchart)

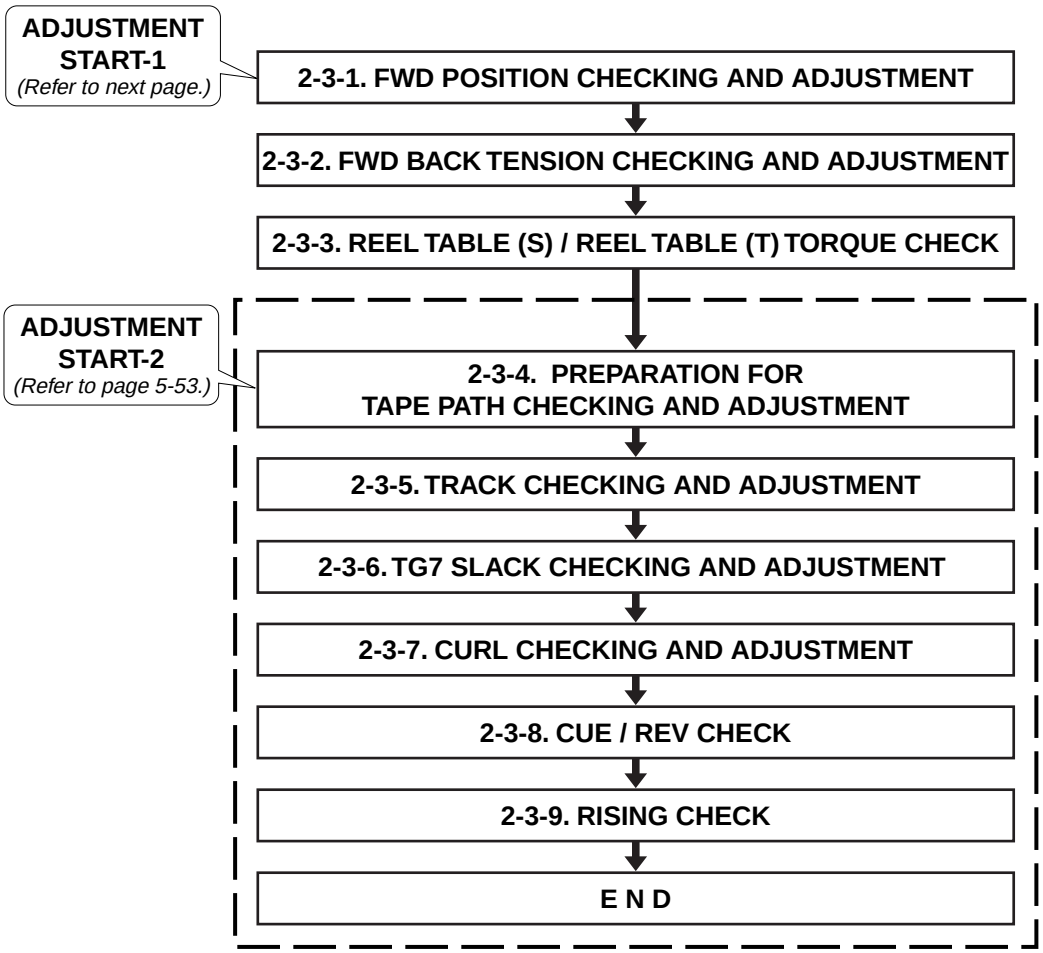

2-3-1. FWD Position Checking and Adjustment

• Checking / adjusting method

Bend the TG1 adjustment plate with the bending stick (J-24) so that the TG1 flange external circumference, including fluctuation, is within the gauge range while the TG1 adjustment jig (J-18) runs in the FWD mode.

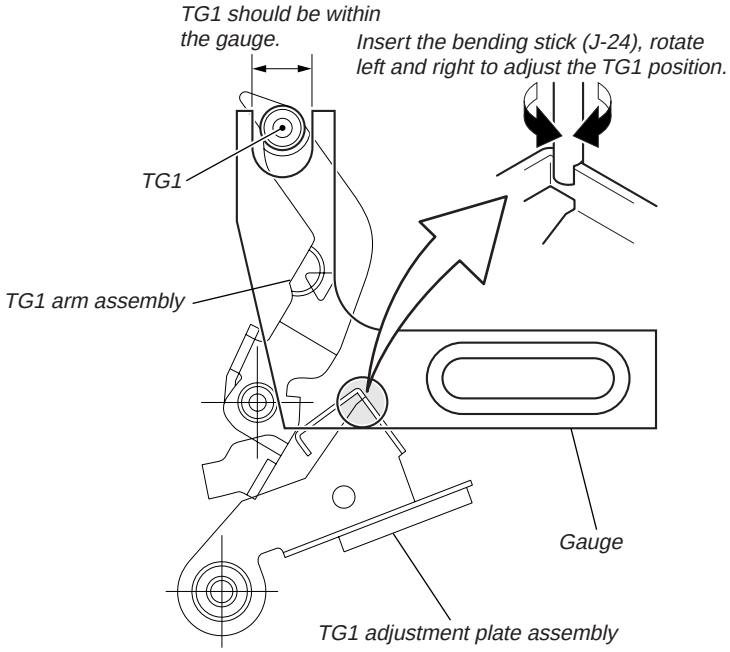

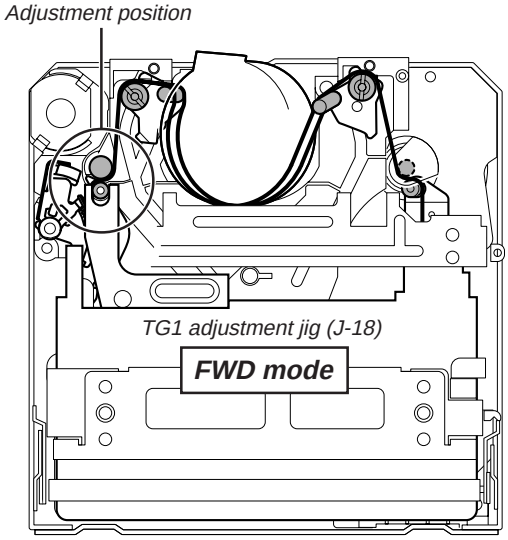

2-3-2. FWD Back Tension Checking and Adjustment

• Checking / adjusting method

Check the gauge value (reel table (S) side) of the mini DV torque cassette (J-21) in the FWD mode. Adjust the position of the TG1 spring hook so that the gauge value satisfies the specified value.
If the specified value is not satisfied, hook the TG1 spring hook claw to the middle position, and check that the FWD position is correct. If not correct, adjust the FWD position again, and check the FWD back tension again.

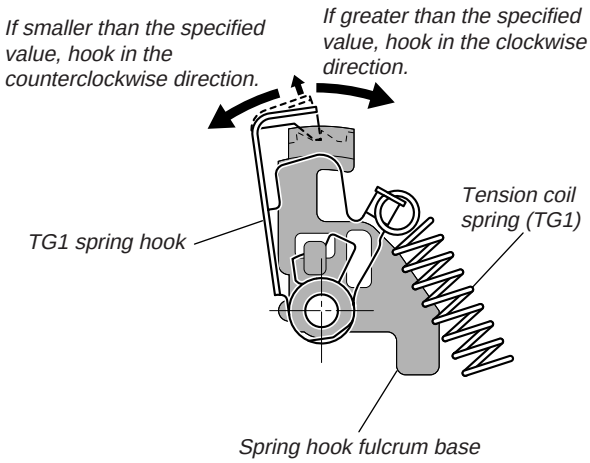

If the FWD position is correct but the specified value for the FWD back tension is not satisfied, replace the tension coil spring (TG1), and perform this adjustment again.
(For details on how to replace, refer to “2-2-6. Tension coil spring (TG1)”.)
If the fluctuations of the FWD back tension are great and the specified value is not satisfied, replace the reel table S assembly.
(For details on how to replace, refer to “2-2-4. Reel Table (S) Assembly”.)

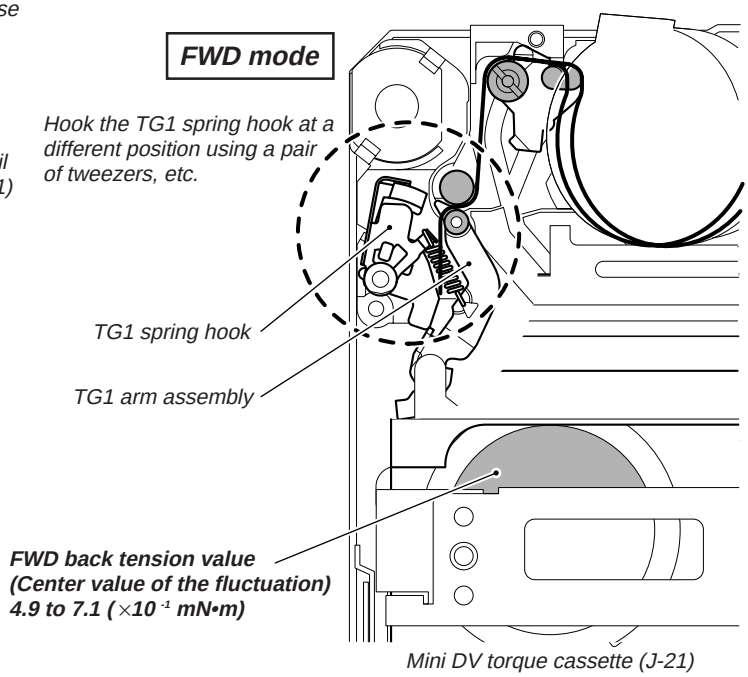

2-2-3. Reel Table (S) / Reel Table (T) Torque Check

• Checking the Reel table (S) side

Check the gauge value (reel table (S) side) of the mini DV torque cassette (J-21) in the RVS mode.

• Checking the Reel table (T) side

Check the gauge value (reel table (T) side) of the mini DV torque cassette (J-21) in the FWD mode.

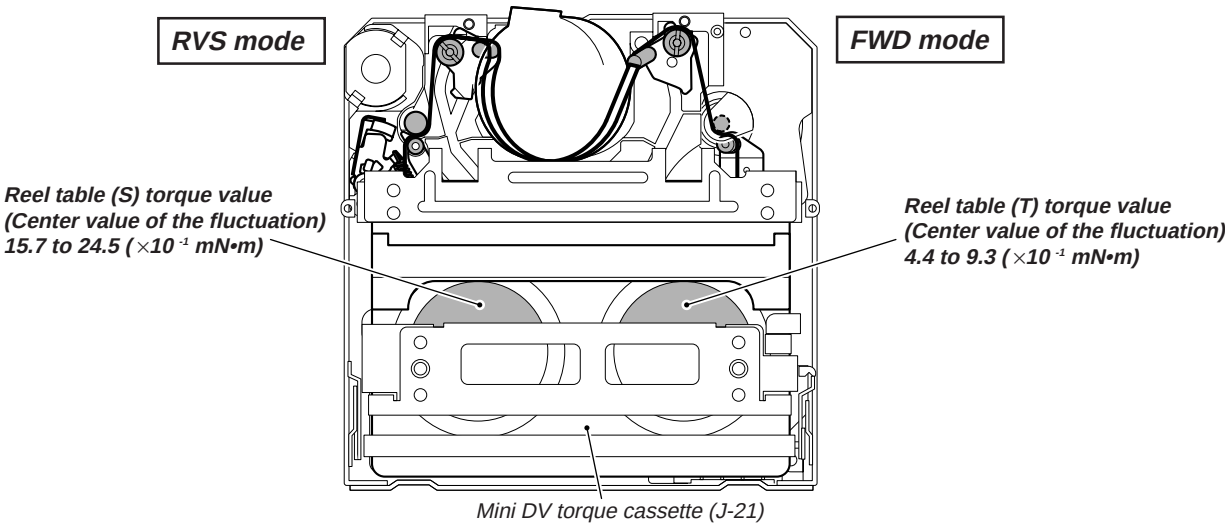

If the specification is not satisfied, check the 4-1 FWD position, and if no problems, replace the respective reel tables, and check again.
(For details on how to replace, refer to "2-2-4. Reel Table (S) / Reel Table (T) Assemblies".)

2-3-4. Preparation for Tape Path Checking and Adjustment

• Preparations before adjustment 1 (Connection and setting)

1. Clean the tape running side.
   (Refer to “2-4-2. Cleaning of Tape Path System”.)
2. Connect the adjustment remote commander (J-5) to the LANC jack.

3. Turn the HOLD switch of the adjustment remote commander to the ON position.
4. Connect an oscilloscope to VC-242D board CN007 via the CPC-13 jig (J-6082-388-A).
   Channel 1: VC-242D board, CN007 Pin ② (Note)
   External trigger: VC-242D board, CN007 Pin ③
   Note: Connect a 75 Ω resistor between pins ② of CN007 and ① (GND).
   75 Ω resistor (Parts code: 1-247-804-11)

CN007 of VC-242D board

Pin No.	Signal Name	Pin No.	Signal Name
1	GND	11	H START
2	RF MON	12	XHD/PSIG
3	SWP	13	EVF VB
4	RF IN/LANC JACK IN	14	EVF VR
5	TDO	15	EVF VCO
6	GND	16	GND
7	TCK	17	EVF BL –
8	TDI	18	EVF VG
9	PANEL COM	19	LANC SIG
10	TMS	20	EVF BL +

5. Playback the alignment tape for tracking (J-20). (XH2-1A1 exclusive)
6. Select page: 3, address: 33, and set data: 08.
7. Select page: 3, address: 26, and set data: 31.
8. Check the states at the entrance and exit of the RF waveform. If not flat at either side, perform the adjustments from “Flowchart Adjustment start-2” on page 5-50.
9. After completing the adjustment, perform “Procedure after checking operations”.

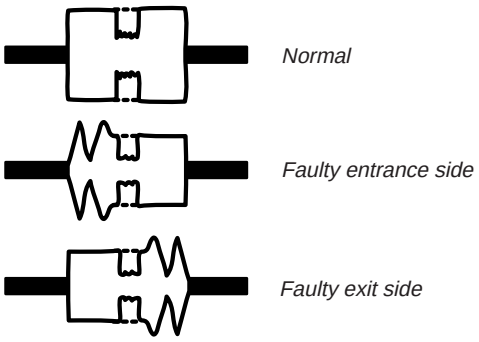

Procedure after operations

1. Connect the adjustment remote commander to the LANC jack and set the HOLD switch to the ON position.
2. Select page: 3, address: 26, and set data: 00.
3. Select page: 3, address: 33, and set data: 00.
4. Disconnect the power of the unit.

• Preparations before adjustment 2 (Preparing an exclusive tracking tape (J-20))

Remove the lid of the cassette due to the C mechanism structure.

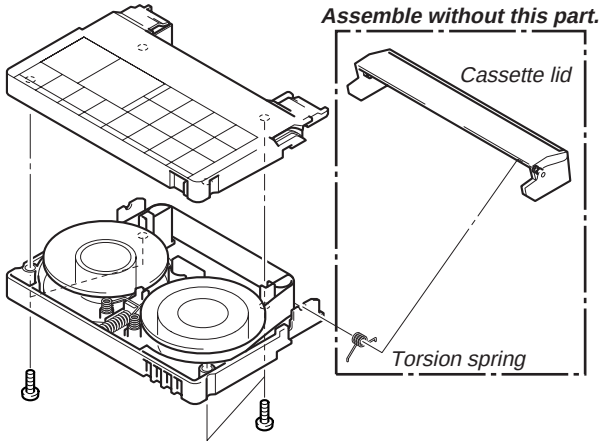

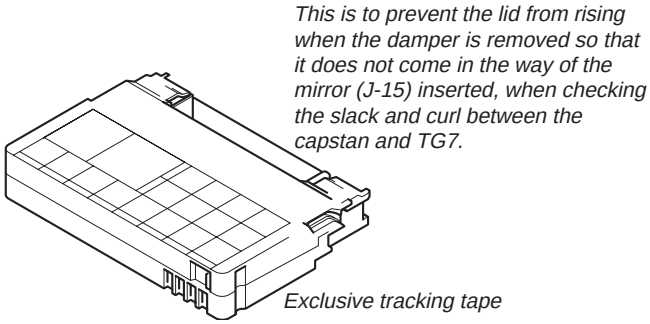

2-3-5. Track Checking and Adjustment

• Checking / adjusting method

Run the tracking tape (J-20) in the PLAYBACK mode, and check that the RF waveform is flat at both the entrance and exit.

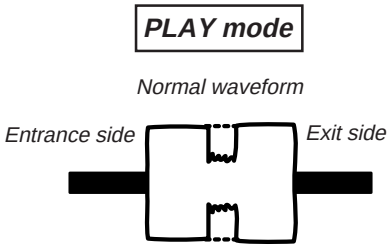

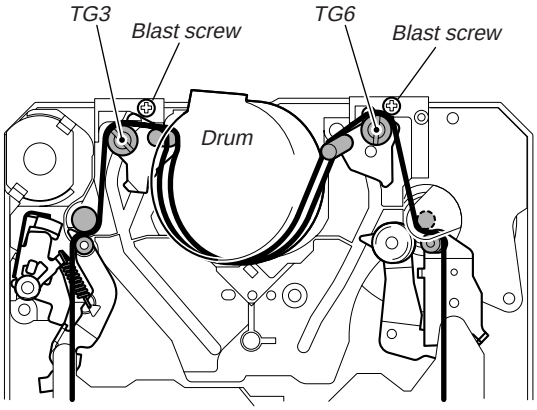

• If not flat

If the waveform at the entrance is bad, rotate TG3.
If that at the exit is bad, rotate TG6 to flatten the waveform.

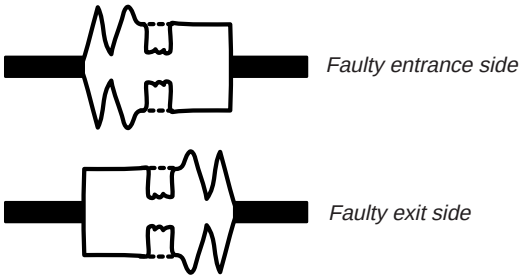

• Tips for adjustment

The tape path waveform at the entrance and exit should both be flat, or that at the entrance should be slightly raised and that at the exit should be lowered. If that at the entrance is slightly lowered especially, problems such as sound drop may occur.

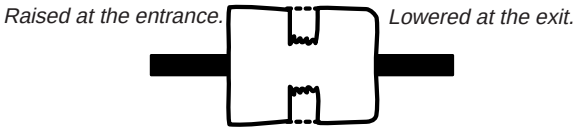

If the waveform does not become flat even if the guides are rotated at the entrance and exit, the characteristics may be faulty of the tracking tape with time. Check again using a new tracking tape. If the waveform still does not become flat, the coaster assembly and drum base block assembly may be faulty.
(For details on how to replace, refer to “2-2-2. Drum Base Block Assembly or 2-2-9. GL Block Assembly”.)

2-3-6. TG7 Slack Checking and Adjustment

• Checking / adjusting method

Run the tracking tape (J-20) in the REV mode, and visually check from right above the slack between the capstan and TG6. If the slack is great, rotate TG7 to satisfy the specified value.

• If the slack occurs

If the slack can not be corrected, the TG7 arm block assembly may be faulty.
(For details on how to replace, refer to “2-2-6. TG7 Arm Block Assembly”.)

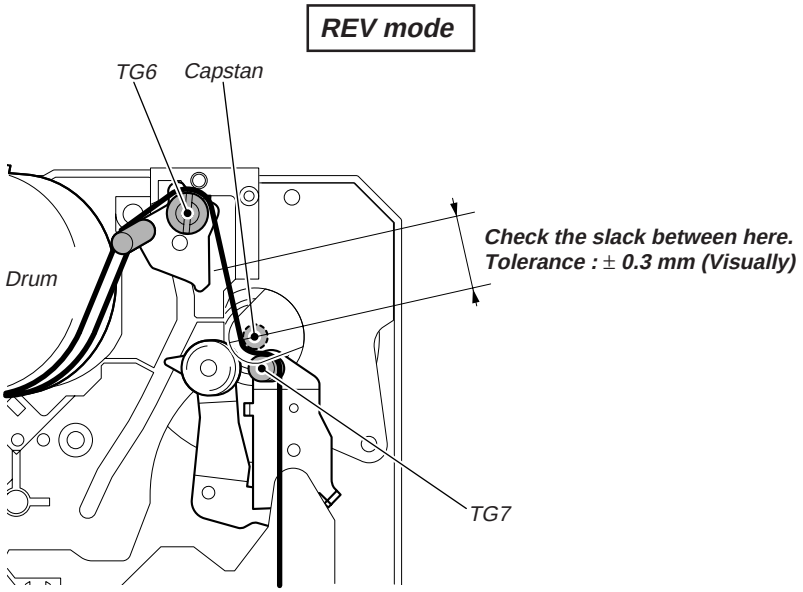

2-3-7. Curl Checking and Adjustment

• Checking / adjusting method

Run the tracking tape (J-20) (exclusive) in the CUE mode or REV mode, and check that the tape runs along each flange.
Also check that there are no large curls on each tape guide.

• If the curl is large or there are clearances

If the TG3 curl is large or clearances exist, replace the coaster (S) assembly. If the TG6 curl is large, or clearances exist, replace the coaster (T) assembly. If curls or clearances exist on the TG7, rotate TG7 and adjust its height.

Note: Be careful not to rotate TG7 excessively.
For details on how to replace the coaster (S) / (T) assembly, refer to 2-2-13 on page 5-48.

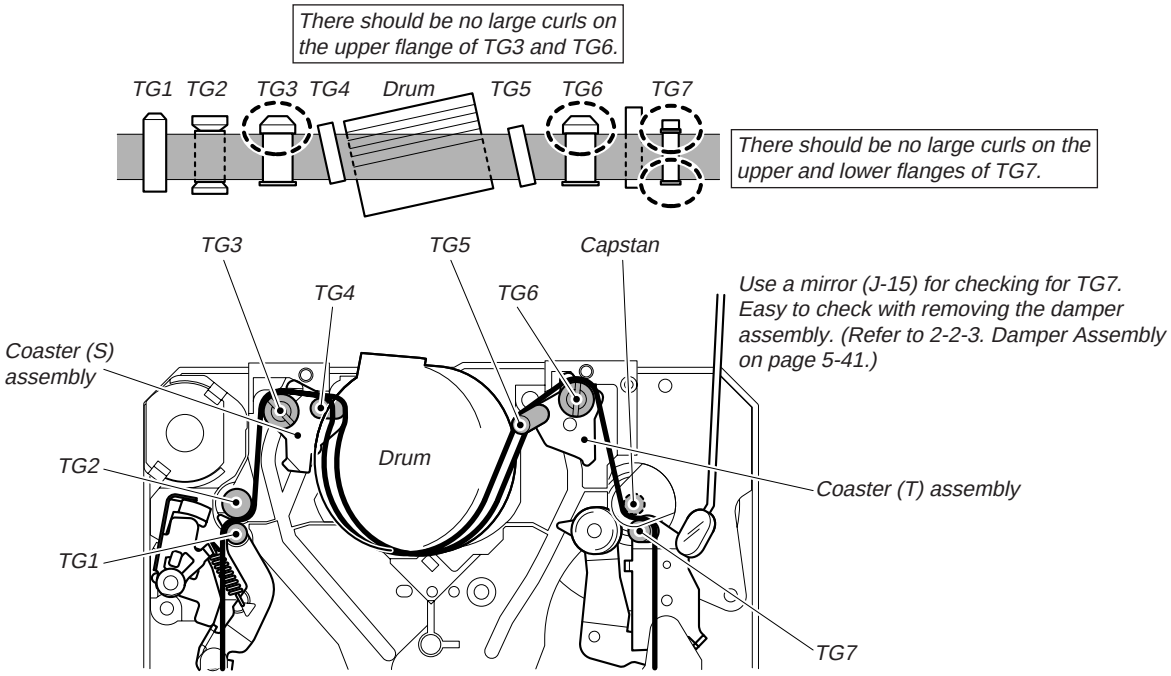

2-3-8. CUE / REV Check

• Checking method

Run the tracking tape (J-20) in the CUE mode or REV mode, and check that the intervals of the waveform peaks are consistent.

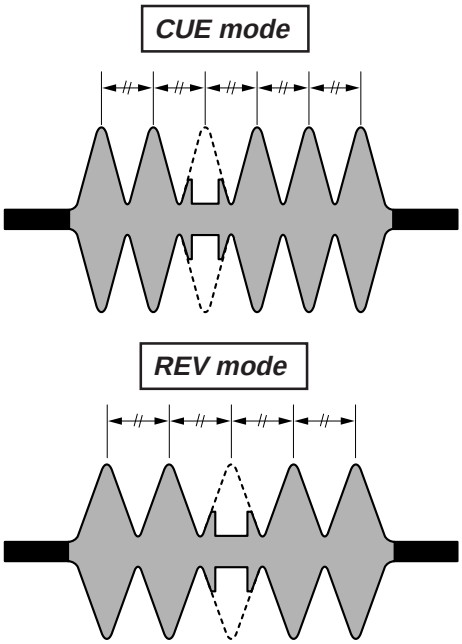

• If not even

If the waveform peaks are not even, perform "Tracking adjustment" again.

2-3-9. Rising Check

• Checking method

Check that when the tracking tape (J-20) is switched from the STOP, CUE, REV, FF, REW modes to the PLAYBACK mode, the waveform rises horizontally within 2 seconds.
Perform this 2 or 3 times.

Mode changes

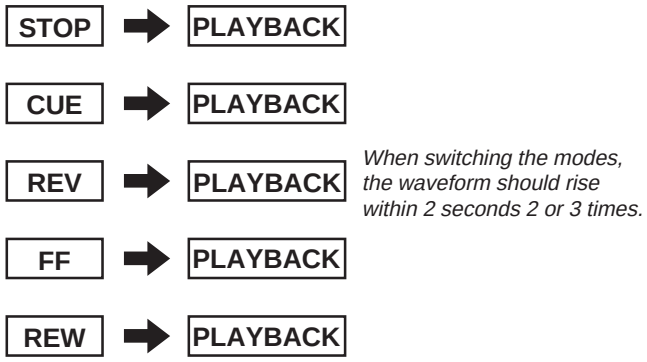

• Check after checking rising

- Check that the tape loads and unloads smoothly.
- Play a self-recorded or already recorded tape, and check that the sound and images are normal.

2-4. PERIODIC CHECK

• Carry out the following maintenance and periodic checks not only to fully display the functions and performance of the set, but also for the equipment and tape. After repairing, service the set as follows, regardless of the length of use.

2-4-1. Cleaning of Rotary Drum Assembly

1. Press a wiping cloth (J-13) moistened with cleaning fluid (J-12) against the rotary drum assembly gently, and clean it while rotating the rotary drum assembly slowly with your finger in the counterclockwise direction.

Note: Do not rotate the motor on power or rotate the rotary drum assembly in the clockwise direction with your finger. The head tip will also be damaged if the wiping cloth is moved perpendicularly against it. Therefore, be sure to follow the above instructions when cleaning the rotary drum assembly.

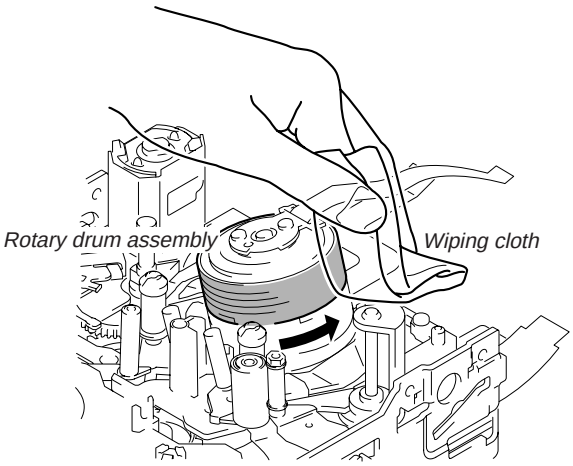

2-4-2. Cleaning of Tape Path System

1. Clean the tape path systems (TG1 to TG7 and capstan) and the lower drum using a super fine applicator (J-14) moistened with cleaning fluid.

Note 1: Make sure that no oil or grease of the link mechanisms sticks to the super fine applicator (J-14).
Note 2: Do not use a applicator moistened with alcohol to the other guide cleaning. But clean the pinch roller using alcohol.

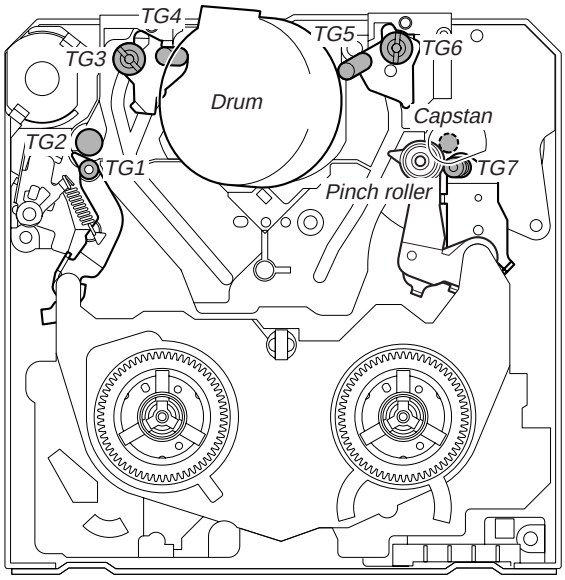

2-4-3. Periodic Checks

Location of Maintenance and Check		Hours of Use (H)										Remarks
		500	1000	1500	2000	2500	3000	3500	4000	4500	5000	
	Cleaning of tape path surface	○	○	○	○	○	○	○	○	○	○	
	Cleaning and degaussing of rotary drum assembly	○	○	○	○	○	○	○	○	○	○	Be careful of the oil.
Driving system	Timing belt	—	□	—	□	—	□	—	□	—	□	Make sure that no oil gets on the tape path surface.
	Capstan (Bearing)	—	□	—	□	—	□	—	□	—	□	
	Loading motor	—	□	—	□	—	□	—	□	—	□	X-3948-346-1
Performance Confirmation	Abnormal noise	□	□	□	□	□	□	□	□	□	□	
	Back tension measurement	—	□	—	□	—	□	—	□	—	□	
	Brake system	—	□	—	□	—	□	—	□	—	□	
	FWD/RVS torque measurement	—	—	—	—	—	—	—	—	—	—	

○ : Cleaning □ : Confirmation

Note 1: When overhauling, refer to the checks above and replace parts.
Note 2: Greasing
Always use the specified grease. If the viscosity differs, various problems may occur.
(Use SG-941 for all parts of the C mechanism.)
Check the quantity of grease when installing the parts which is needed to apply the grease.
• FLOIL (SG-941): Part No. 7-662-001-39

5-3. VIDEO SECTION ADJUSTMENTS

NTSC model : DSR-PD150
PAL model : DSR-PD150P

3-1. PREPARATIONS BEFORE ADJUSTMENTS

Use the following measuring instruments for video section adjustments.

3-1-1. Equipment Required

1) TV monitor
2) Oscilloscope (dual-phenomenon, band above 30 MHz with delay mode) (Unless specified otherwise, use a 10 : 1 probe.)
3) Frequency counter
4) Pattern generator with video output terminal.
5) Digital voltmeter
6) Audio generator
7) Audio level meter
8) Audio distortion meter
9) Audio attenuator
10) Regulated power supply
11) Alignment tapes
    - Tracking standard (XH2-1A1)
      Parts code: 8-967-999-03
    - SW/OL standard (XH2-3)
      Parts code: 8-967-997-11
    - Audio operation check for NTSC (XH5-3)
      Parts code: 8-967-997-51
    - System operation check for NTSC (XH5-5)
      Parts code: 8-967-997-61
    - BIST check for NTSC (XH5-6)
      Parts code: 8-967-997-71
    - Audio operation check for PAL (XH5-3P)
      Parts code: 8-967-997-55
    - System operation check for PAL (XH5-5P)
      Parts code: 8-967-997-66
    - BIST check for PAL (XH5-6P)
      Parts code: 8-967-997-76
12) Adjustment remote commander (J-6082-053-B)
13) CPC-13 jig (J-6082-443-A)
14) Extension cable (50P, 0.5 mm)
    For extension between the CD-254 board (CN100) and the VC-242D board (CN025) (J-6082-496-A)

3-1-2. Precautions on Adjusting

1) The adjustments of this unit are performed in the VTR mode or camera mode.
   To set to the VTR mode, set the power switch to “VCR” (or “PLAYER”) or set the “Forced VTR Power ON mode” using the adjustment remote commander (Note 1).
   To set to the Camera mode, set the power switch to “CAMERA” or set the “Forced Camera Power ON mode” using the adjustment remote commander (Note 2).
   After completing adjustments, be sure to exit the “Forced VTR Power ON Mode” or “Forced Camera Power ON Mode”. (Note 3)
2) The handle block (XLR connector, Microphone amplifier, remote commander receiver, VTR function key) need not be connected except during “Battery End Adjustment” and “Audio adjustments”. To remove, disconnect the following connector.
   FK-076 board CN501 (36P, 0.8mm)
3) By setting the “Forced VTR Power ON mode” or “Forced Camera Power ON mode”, the video section can be operate even if the cabinet (L) (Control switch block (CF-4980)) has been removed. When removing the cabinet (L) disconnect the following connector.
   VC-242D board CN009 (14P, 0.5mm)
4) Cabinet (R) (CK-093board, LCD block) need not be connected. But removing the cabinet (R) (removing the VC-242D board CN008) means removing the lithium 3V power supply (CK-093 board, BT250) , data such as date, time, user-set menus will be lost. After completing adjustments, reset these data. If the cabinet (R) has been removed, the self-diagnosis data, data on history of use (total drum rotation time etc.) will be lost. Before removing, note down the self-diagnosis data and the data on the history use (data of page: 2, address: A2 to AA). (Refer to “SELF-DIAGNOSIS FUNCTION” for the self-diagnosis data, and to “5-4.Service Mode” for the data on the history use.)
   To remove the cabinet (R), disconnect the following connector.
   VC-242D board CN008 (50P, 0.5mm)
5) The viewfinder (LB-065 board) is need not be connected. To remove it, disconnect the following connector.
   VC-242D board CN8612 (27P, 0.3mm)
6) The FP-200 (flexible) is need not be connected. To remove it, disconnect the following connectors.
   VC-242D board CN004 (10P, 0.5mm)
   LA-026 board CN053 (27P, 0.5mm)
7) The LA-026 board is need not be connected. To remove it, disconnect the following connectors.
   VC-242D board CN023 (80P, 0.5mm)
8) The CD-254 board of the lens block is need not be connected. To remove it, disconnect the following connectors.
   VC-242D board CN025 (50P, 0.5mm)

Note 1: Setting the “Forced VTR Power ON” mode (VTR mode)
1) Select page: 0, address: 01, and set data: 01.
2) Select page: D, address: 10, set data: 02, and press the PAUSE button of the adjustment remote commander.
The above procedure will enable the VTR power to be turned on with the control switch block (CF-4980) removed.
After completing adjustments, be sure to exit the “Forced Power ON mode”.

Note 2: Setting the “Forced Camera Power ON” mode (Camera mode)
1) Select page: 0, address: 01, and set data: 01.
2) Select page: D, address: 10, set data: 01, and press the PAUSE button of the adjustment remote commander.
The above procedure will enable the camera power to be turned on with the control switch block (CF-4980) removed.
After completing adjustments, be sure to exit the “Forced Power ON mode”.

Note 3: Setting the “Forced Memory Power ON” mode (Memory mode)
1) Select page: 0, address: 01, and set data: 01.
2) Select page: D, address: 10, set data: 05, and press the PAUSE button of the adjustment remote commander.
The above procedure will enable the memory power to be turned on with the control switch block (CF-4980) removed.
After completing adjustments, be sure to exit the “Forced Power ON mode”.

Note 4: Exiting the “Forced Power ON” mode
1) Select page: 0, address: 01, and set data: 01.
2) Select page: D, address: 10, set data: 00, and press the PAUSE button of the adjustment remote commander.
3) Select page: 0, address: 01, and set data: 00.

3-1-3. HOW TO ENTER RECORD MODE WITHOUT CASSETTE

1) Connect the adjustment remote commander to the LANC jack.
2) Turn the HOLD switch of the adjustment remote commander to the ON position.
3) Close the cassette compartment without the cassette.
4) Select page: 3, address: 01, set data: 0C, and press the PAUSE button of the adjustment remote commander.
   (The mechanism enters the record mode automatically.)
   Note: The function buttons become inoperable.
5) To quit the record mode, select page: 3, address: 01, set data: 00, and press the PAUSE button of the adjustment remote commander. (Whenever you want to quit the record mode, be sure to quit following this procedure.)

3-1-4. HOW TO ENTER PLAYBACK MODE WITHOUT CASSETTE

1) Connect the adjustment remote commander to the LANC jack.
2) Turn the HOLD switch of the adjustment remote commander to the ON position.
3) Close the cassette compartment without the cassette.
4) Select page: 3, address: 01, set data: 0B, and press the PAUSE button of the adjustment remote commander.
   (The mechanism enters the playback mode automatically.)
   Note: The function buttons become inoperable.
5) To quit the playback mode, select page: 3, address: 01, set data: 00, and press the PAUSE button of the adjustment remote commander. (Whenever you want to quit the playback mode, be sure to quit following this procedure.)

3-1-5. Adjusting Connectors

Some of the adjusting points of the video section are concentrated at VC-242D board CN007. Connect the measuring instruments via the CPC-13 jig (J-6082-443-A). The following table lists the pin numbers and signal names of CN007.

Pin No.	Signal Name	Pin No.	Signal Name
1	GND	11	H START
2	RF MON	12	XHD/PSIG
3	SWP	13	EVF VB
4	RF IN/LANC JACK IN	14	EVF VR
5	TDO	15	EVF VCO
6	GND	16	GND
7	TCK	17	EVF BL –
8	TDI	18	EVF VG
9	PANEL COM	19	LANC SIG
10	TMS	20	EVF BL +

Table 5-3-1.

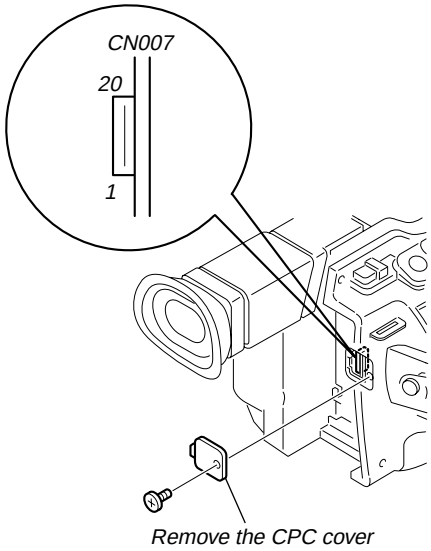

Fig. 5-3-1

3-1-6. Connecting the Equipment

Connect the measuring instruments as shown in Fig. 5-3-2, and perform the adjustments.

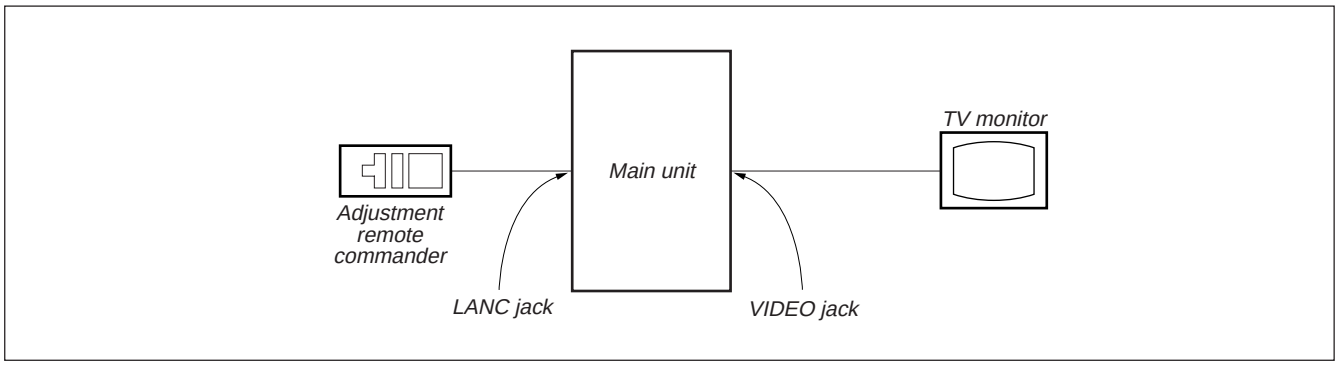

Fig. 5-3-2.

3-1-7. Alignment Tapes

Use the alignment tapes shown in the following table.
Use tapes specified in the signal column of each adjustment.

Name	Use
Tracking standard (XH2-1A1)	Tape path adjustment
SW/OL standard (XH2-3)	Switching position adjustment
Audio operation check (XH5-3 (NTSC), XH5-3P (PAL))	Audio system adjustment
System operation check (XH5-5 (NTSC), XH5-5P (PAL))	Operation check
BIST check (XH5-6 (NTSC), XH5-6P (PAL))	BIST check

Fig. 5-3-3 shows the 75% color bar signals recorded on the alignment tape for Audio Operation Check.

Note: Measure with video terminal (Terminated at 75 Ω)

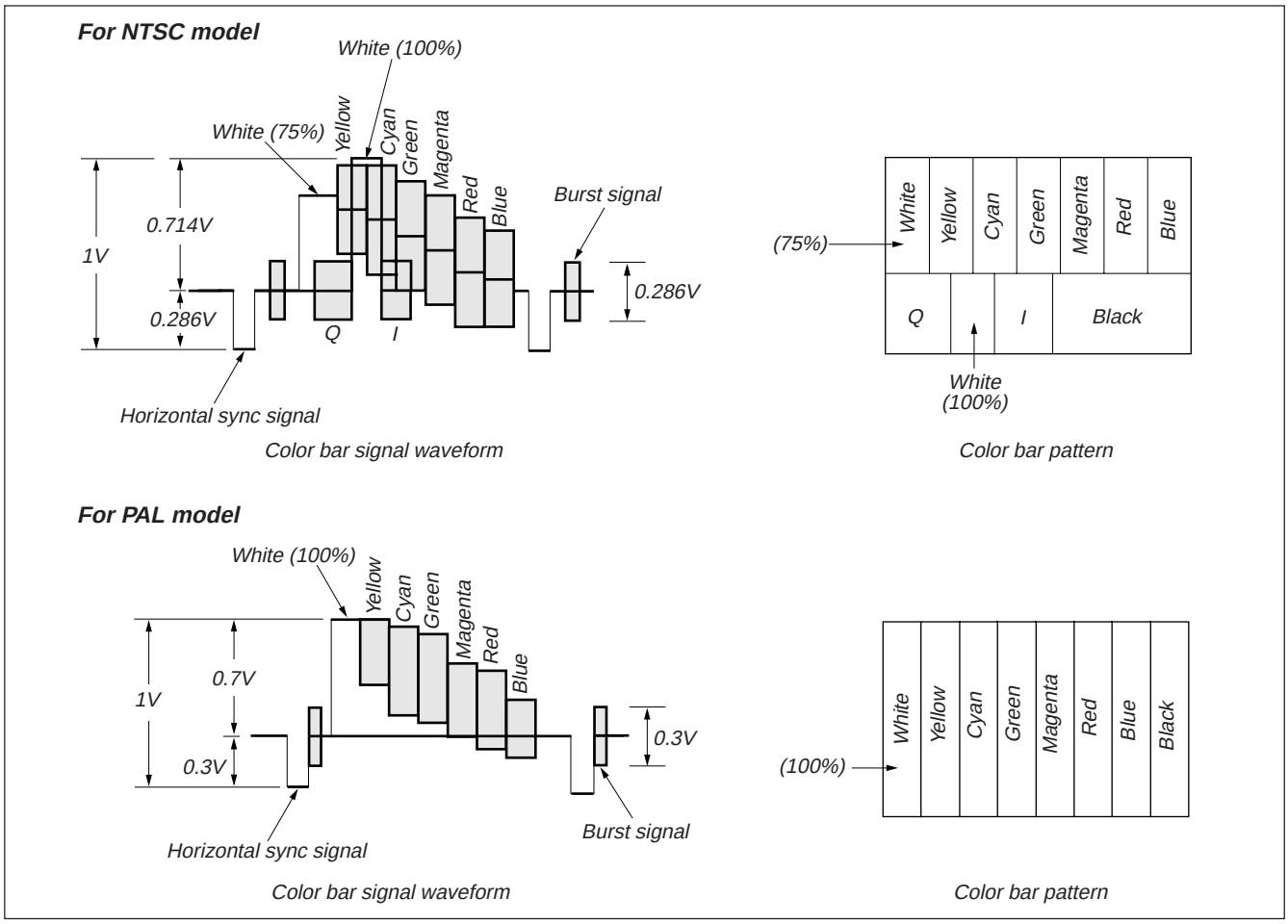

Fig. 5-3-3. Color bar signal of alignment tapes

3-1-8. Input/Output Level and Impedance

Video input/output
- Phono jack
- Video signal: 1 Vp-p, 75 Ω unbalanced, sync negative

S video input/output
- 4-pin mini DIN
- Luminance signal: 1 Vp-p, 75 Ω unbalanced, sync negative
- Chrominance signal: 0.286 Vp-p, 75 Ω unbalanced (NTSC)
  : 0.300 Vp-p, 75 Ω unbalanced (PAL)

Audio input/output
- Phono jack
- Input level: 327mV
- Input impedance: More than 47kΩ
- Output level: 327 mV (at load impedance 47 kΩ)
- Output impedance: Below 2.2 kΩ

3-2. SYSTEM CONTROL SYSTEM ADJUSTMENT

1. Initialization of A, B, C, D, E, F, 8 Page Data

If the B, C, D, E, F, 8 page data is erased due to some reason, perform "1-2. INITIALIZATION OF A, B, C, D, E, F, 8 PAGE DATA", of "5-1. CAMERA SECTION ADJUSTMENT"

2. Serial No. Input

2-1. Company ID Input

Write the company ID in the EEPROM (nonvolatile memory).

Page	C
Address	E8, E9, EA, EB, EC

Input method:

1) Select page: 0, address: 01, and set data: 01.
2) Input the following data to page: C, addresses: E8 to EC.
   Note: Press the PAUSE button of the adjustment remote commander each time to set the data.

Address	Data
E8	08
E9	00
EA	46
EB	01
EC	01

3) Select page: 0, address: 01, and set data: 00.

2-2. Serial No. Input

Write the serial No. and model code in the EEPROM (nonvolatile memory). Convert the serial No. on the name plate from decimal to hexadecimal, and write in the EEPROM.

Page	C
Address	ED, EE, EF

Input method:

1) Select page: 0, address: 01, and set data: 01.
2) Read the serial No. on the name plate, and take it as D_1.
   Example: If the serial No. is 77881.
   D_1=77881
3) Obtain D_2 and H_1 corresponding to D_1 from Table 5-3-2.
   Example: If D_1 is "77881".
   $D_2=D_1-65536=12345$
   H_1=FE

D_1 (Decimal)	D_2 (Decimal)	H_1 (Hexadecimal) (Service model code)
000001 to 065535	D_1	FE
065536 to 131071	$D_1-65536$	FE
131072 to 196607	$D_1-131072$	FE

Table 5-3-2.

4) Input H_1 to page: C, address: ED. (Model code input)
   Example: If H_1 is "FE".
   Select page: C, address: ED, set data: FE, and press the PAUSE button.
5) Obtain the maximum decimal not exceeding D_2 from Table 5-3-3, and take this as D_3.
   Example: If D_2 is "12345".
   D_3=12288
6) Obtain the hexadecimal corresponding to D_3 from Table 5-3-3, and take this as H_3.
   Example: If D_3 is "12288".
   H_3=3000
7) Obtain the difference D_4 between D_2 and D_3. (Decimal calculation, $0 \leqq D_4 \leqq 255$)
   $D_4= D_2-D_3$
   Example: If D_2 is "12345" and D_3 is "12288".
   $D_4=12345-12288=57$
8) Convert D_4 to hexadecimal, and take this as H_4.
   (Refer to "Hexadecimal-decimal conversion table" in "5-4. Service Mode".)
   Example: If D_4 is "57".
   H_4=39
9) Input the upper 2 digits of H_3 to page: C, address: EE.
   Example: If H_3 is "3000".
   Select page: C, address: EE, set data: 30, and press the PAUSE button.
10) Input H_4 to page: C, address: EF.
   Example: If H_4 is "39".
   Select page: C, address: EF, set data: 39, and press the PAUSE button.
11) Select page: 0, address: 01, and set data: 00.

Decimal (D_3)	Hexa-decimal (H_3)	Decimal (D_3)	Hexa-decimal (H_3)	Decimal (D_3)	Hexa-decimal (H_3)	Decimal (D_3)	Hexa-decimal (H_3)	Decimal (D_3)	Hexa-decimal (H_3)	Decimal (D_3)	Hexa-decimal (H_3)	Decimal (D_3)	Hexa-decimal (H_3)	Decimal (D_3)	Hexa-decimal (H_3)
0	0000	8192	2000	16384	4000	24576	6000	32768	8000	40960	A000	49152	C000	57344	E000
256	0100	8448	2100	16640	4100	24832	6100	33024	8100	41216	A100	49408	C100	57600	E100
512	0200	8704	2200	16896	4200	25088	6200	33280	8200	41472	A200	49664	C200	57856	E200
768	0300	8960	2300	17152	4300	25344	6300	33536	8300	41728	A300	49920	C300	58112	E300
1024	0400	9216	2400	17408	4400	25600	6400	33792	8400	41984	A400	50176	C400	58368	E400
1280	0500	9472	2500	17664	4500	25856	6500	34048	8500	42240	A500	50432	C500	58624	E500
1536	0600	9728	2600	17920	4600	26112	6600	34304	8600	42496	A600	50688	C600	58880	E600
1792	0700	9984	2700	18176	4700	26368	6700	34560	8700	42752	A700	50944	C700	59136	E700
2048	0800	10240	2800	18432	4800	26624	6800	34816	8800	43008	A800	51200	C800	59392	E800
2304	0900	10496	2900	18688	4900	26880	6900	35072	8900	43264	A900	51456	C900	59648	E900
2560	0A00	10752	2A00	18944	4A00	27136	6A00	35328	8A00	43520	AA00	51712	CA00	59904	EA00
2816	0B00	11008	2B00	19200	4B00	27392	6B00	35584	8B00	43776	AB00	51968	CB00	60160	EB00
3072	0C00	11264	2C00	19456	4C00	27648	6C00	35840	8C00	44032	AC00	52224	CC00	60416	EC00
3328	0D00	11520	2D00	19712	4D00	27904	6D00	36096	8D00	44288	AD00	52480	CD00	60672	ED00
3584	0E00	11776	2E00	19968	4E00	28160	6E00	36352	8E00	44544	AE00	52736	CE00	60928	EE00
3840	0F00	12032	2F00	20224	4F00	28416	6F00	36608	8F00	44800	AF00	52992	CF00	61184	EF00
4096	1000	12288	3000	20480	5000	28672	7000	36864	9000	45056	B000	53248	D000	61440	F000
4352	1100	12544	3100	20736	5100	28928	7100	37120	9100	45312	B100	53504	D100	61696	F100
4608	1200	12800	3200	20992	5200	29184	7200	37376	9200	45568	B200	53760	D200	61952	F200
4864	1300	13056	3300	21248	5300	29440	7300	37632	9300	45824	B300	54016	D300	62208	F300
5120	1400	13312	3400	21504	5400	29696	7400	37888	9400	46080	B400	54272	D400	62464	F400
5376	1500	13568	3500	21760	5500	29952	7500	38144	9500	46336	B500	54528	D500	62720	F500
5632	1600	13824	3600	22016	5600	30208	7600	38400	9600	46592	B600	54784	D600	62976	F600
5888	1700	14080	3700	22272	5700	30464	7700	38656	9700	46848	B700	55040	D700	63232	F700
6144	1800	14336	3800	22528	5800	30720	7800	38912	9800	47104	B800	55296	D800	63488	F800
6400	1900	14592	3900	22784	5900	30976	7900	39168	9900	47360	B900	55552	D900	63744	F900
6656	1A00	14848	3A00	23040	5A00	31232	7A00	39424	9A00	47616	BA00	55808	DA00	64000	FA00
6912	1B00	15104	3B00	23296	5B00	31488	7B00	39680	9B00	47872	BB00	56064	DB00	64256	FB00
7168	1C00	15360	3C00	23552	5C00	31744	7C00	39936	9C00	48128	BC00	56320	DC00	64512	FC00
7424	1D00	15616	3D00	23808	5D00	32000	7D00	40192	9D00	48384	BD00	56576	DD00	64768	FD00
7680	1E00	15872	3E00	24064	5E00	32256	7E00	40448	9E00	48640	BE00	56832	DE00	65024	FE00
7936	1F00	16128	3F00	24320	5F00	32512	7F00	40704	9F00	48896	BF00	57088	DF00	65280	FF00

Table 5-3-3.

3. Battery End Adjustment

Set the battery end voltage.
If the voltage is incorrect, the life of the battery will shorten.
The image at the battery end will also be rough.

Mode	Camera recording
Subject	Arbitrary
Measurement Point	Display data of page: 2, address: 5D
Measuring Instrument	Adjustment remote commander
Adjustment Page	D
Adjustment Address	48 to 4C

Switch setting

1) AUTO FOCUS ..... OFF

Connection:

1) Connect the regulated power supply and the digital voltmeter to the battery terminal as shown in Fig. 5-3-4.

Preparations before adjustments:

1) Adjust the output voltage of the regulated power supply so that the digital voltmeter display is 6.1 ± 0.1Vdc.
2) Turn off the power supply.
3) Turn on the HOLD switch of the adjustment remote commander.
4) Turn on the power supply.
5) Load a cassette, and set to the camera recording mode.

Adjusting method:

Order	Page	Address	Data	Procedure
1	0	01	01	Set the data.
2				Decrease the output voltage of the regulated power supply so that the digital voltmeter display is 5.50 ± 0.01Vdc.
3	2	5D		Read the data, and this data is named Dref.
4	D	48	Dref	Set the data, and press PAUSE button.
5				Convert Dref to decimal notation, and obtain Dref'. (Note1)
6				Calculate D_{49}', D_{4A}', D_{4B}' and D_{4C}' using following equations. (decimal calculation) D_{49}' =Dref' + 7 D_{4A}' =Dref' + 25 D_{4B}' =Dref' + 29 D_{4C}' =Dref' + 37
7				Convert D_{49}', D_{4A}', D_{4B}' and D_{4C}' to decimal notation, and obtain D_{49}, D_{4A}, D_{4B} and D_{4C}. (Note1)
8	D	49	D_{49}	Set the data, and press PAUSE button.
9	D	4A	D_{4A}	Set the data, and press PAUSE button.
10	D	4B	D_{4B}	Set the data, and press PAUSE button.
11	D	4C	D_{4C}	Set the data, and press PAUSE button.
12	0	01	00	Set the data.

Note1: Refer to Table 5-4-1. “Hexadecimal-decimal conversion table” of “5-4.Service mode”.

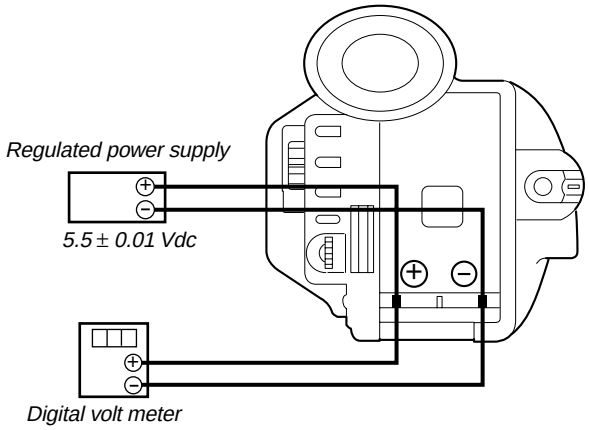

Fig. 5-3-4.

3-3. SERVO AND RF SYSTEM ADJUSTMENT

Before perform the servo and RF system adjustments, check that the specified value of "27 MHz Origin Oscillation Adjustment" of "CAMERA SYSTEM ADJUSTMENT" is satisfied.

Adjusting Procedure:

1. Cap FG duty adjustment
2. T-reel FG duty adjustment
3. PLL f_0 & LPF f_0 adjustment
4. Switching position adjustment
5. AGC center level
6. APC & AEQ adjustment
7. PLL f_0 & LPF f_0 final adjustment

1. Cap FG Duty Adjustment (VC-242D board)

Set the Cap FG signal duty cycle to 50% to establish an appropriate capstan servo. If deviated, the uneven rotation of capstan and noise can occur.

Measurement Point	Display data of page: 3, address: 03
Measuring Instrument	Adjustment remote commander
Adjustment Page	C
Adjustment Address	16
Specified Value	00

Adjusting method:

Order	Page	Address	Data	Procedure
1				Close the cassette compartment without inserting a cassette.
2	0	01	01	Set the data.
3	3	01	1B	Set the data, and press PAUSE button.
4	3	02		Check that the data changes in the following order. "1B" → "2B" → "00"
5	3	03		Check that the data is "00". (Note)
6	0	01	00	Set the data.

Note: If the data is "01", adjustment has errors or the mechanism deck is defective.

2. T reel FG Duty Adjustment (VC-242D board)

Adjust the take-up reel FG signal duty cycle to an appropriate value so that the correct T-reel FG signal is obtained.

Measurement Point	Display data of page: 3, address: 03
Measuring Instrument	Adjustment remote commander
Adjustment Page	C
Adjustment Address	17
Specified Value	00

Adjusting method:

Order	Page	Address	Data	Procedure
1				Close the cassette compartment without inserting a cassette.
2	0	01	01	Set the data.
3	3	01	1C	Set the data, and press PAUSE button.
4	3	02		Check that the data changes in the following order. "1C" → "2C" → "00"
5	3	03		Check that the data is "00". (Note)
6	0	01	00	Set the data.

Note: If the data is "02", adjustment has errors or the mechanism deck is defective.

3. PLL f_0 & LPF f_0 Adjustment (VC-242D board)

Mode	VTR stop
Measurement Point	Display data of page: 3, address: 03
Measuring Instrument	Adjustment remote commander
Adjustment Page	C
Adjustment Address	1F, 20, 22, 29
Specified Value	Bit2, bit3 and bit6 are "0"

Adjusting method:

Order	Page	Address	Data	Procedure
1	0	01	01	Set the data.
2	3	01	30	Set the data, and press PAUSE button.
3	3	02		Check that the data changes to "00".
4	3	03		Check that the data is "00". (Note)
5	0	01	00	Set the data.

Note: If the data is other than "00", there are errors.
For the error contents, see the following table. (For the bit values, refer to "5-4. SERVICE MODE", "4-3. 3. Bit value discrimination".)

Bit value of page: 3, address: 03 data	Error contents
bit 4 = 1	PLL f_0 even channel is defective
bit 5 = 1	PLL f_0 odd channel is defective
bit 6 = 1	LPF f_0 is defective
bit 3 = 1	PLL f_0 final adjustment is defective
bit 2 = 1	PLL f_0 final adjustment time-out

4. Switching Position Adjustment (VC-242D board)

Mode	VTR playback
Signal	SW/OL reference tape (XH2-3)
Measurement Point	Display data of page: 3, address: 03
Measuring Instrument	Adjustment remote commander
Adjustment Page	C
Adjustment Address	10, 11, 12, 13
Specified Value	00

Adjusting method:

Order	Page	Address	Data	Procedure
1				Insert the SW/OL reference tape and enter the VTR STOP mode.
2	0	01	01	Set the data.
3	3	21		Check that the data is “02”. (Note1)
4	3	01	0D	Set the data, and press PAUSE button.
5	3	02		Check that the data changes to “00”.
6	3	03		Check that the data is “00”. (Note2)
7	0	01	00	Set the data.

Note1: If the data of page: 3, address: 21 is “72”, the tape top being played. After playing the tape for 1 to 2 seconds, stop it, perform step 4 and higher.

Note2: If bit 0 of the data is “1”, the even channel is defective. If bit 1 is “1”, the odd channel is defective. Contents of the defect is written into page: C, addresses: 10 and 12. See the following table. (For the bit values, refer to “5-4. SERVICE MODE”, “4-3. 3. Bit value discrimination”.)

When the even channel is defective

Data of page: C, address: 10	Contents of defect
EE	Writing into EEPROM (IC502) is defective
E8	Adjustment data is out of range
E7	No data is returned from IC301 (CAIN)

When the odd channel is defective

Data of page: C, address: 12	Contents of defect
EE	Writing into EEPROM (IC502) is defective
E8	Adjustment data is out of range
E7	No data is returned from IC301 (CAIN)

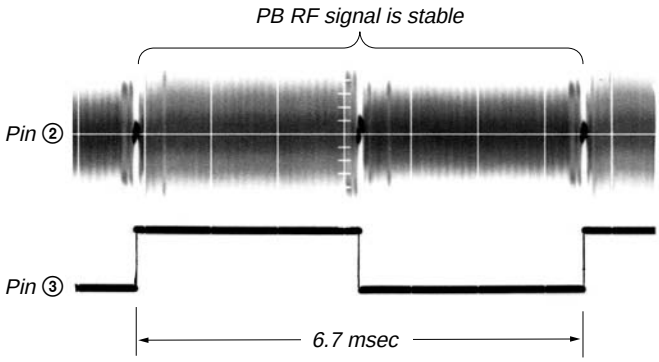

Fig. 5-3-5.

5. AGC Center Level and APC & AEQ Adjustment

5-1. Preparations before adjustments

Mode	Camera recording
Subject	Arbitrary

Adjusting method:

Order	Page	Address	Data	Procedure
1	2	30	40	Set the data.
2				Record the camera signal for three minutes.

5-2. AGC Center Level Adjustment (VC-242D board)

Mode	Playback
Signal	Recorded signal at “Preparations before adjustments”
Measurement Point	Pin ② of CN007 (RF MON) (Note 1) Ext. trigger: Pin ③ of CN007 (SWP)
Measuring Instrument	Oscilloscope
Adjustment Page	C
Adjustment Address	1E
Specified Value	The data of page: 3, address: 03 is “00”

Note 1: Connect a 75Ω resistor between Pin ② and Pin ① (GND) of CN007.
75Ω resistor (Parts code: 1-247-804-11)

Adjusting method:

Order	Page	Address	Data	Procedure
1				Playback the recorded signal at “Preparations before adjustments”
2	0	01	01	Set the data.
3	3	33	08	Set the data.
4				Confirm that the playback RF signal is stable. (Fig. 5-3-5.)
5	3	01	23	Set the data, and press PAUSE button.
6	3	02		Check that the data is “00”.
7	3	03		Check that the data is “00”. (Note2)
8				Perform “APC & AEQ Adjustment”.

Note2: If the data of page: 3, address: 03 is other than “00”, adjustment has errors. (Take an appropriate remedial measures according to the errors referring to the following table.)

Data	Contents of defect
20	Perform re-adjustment. (Note 3)
30	The machine is defective
40	Perform re-adjustment. (Note 3)
50	The machine is defective

Note 3: If this data is displayed twice successively, the machine is defective.

5-3. APC & AEQ Adjustment (VC-242D Board)

Mode	Playback
Signal	Recorded signal at “Preparations before adjustments”
Measurement Point	Pin ② of CN007 (RF MON) (Note 1) Ext. trigger: Pin ③ of CN007 (SWP)
Measuring Instrument	Oscilloscope
Adjustment Page	C
Adjustment Address	18, 19, 1B, 1C, 21, 2C
Specified Value	The data of page: 3, address: 03 is “00”

Note 1: Connect a 75Ω resistor between Pin ② and Pin ① (GND) of CN007.
75Ω resistor (Parts code: 1-247-804-11)

Note 2: The “AGC Center Level Adjustment” must have already been completed before starting this adjustment.

Adjusting method:

Order	Page	Address	Data	Procedure
1				Playback the recorded signal at “Preparations before adjustments”
2	0	01	01	Set the data.
3	3	33	08	Set the data.
4				Confirm that the playback RF signal is stable. (Fig. 5-3-6.)
5	3	01	07	Set the data, and press PAUSE button.
6	3	02		Check that the data changes from “07” to “00” in about 30 seconds after pressing PAUSE button.
7	3	03		Check that the data is “00”. (Note3)
8				Perform “Processing after Completing Adjustments”.

Note3: If the data is other than “00”, adjustment has errors. Take an appropriate remedial measures according to the errors referring to the following table.

Data	Contents of defect
20	Perform re-adjustment. (Note 4)
30	The machine is defective
50	Perform re-adjustment. (Note 4)
60	The machine is defective
80	The machine is defective

Note 4: If this data is displayed twice successively, the machine is defective.

5-4. Processing after Completing Adjustments

Order	Page	Address	Data	Procedure
1	2	30	00	Set the data.
2	3	33	00	Set the data.
3	0	01	00	Set the data.

6. PLL f_0 & LPF f_0 Final Adjustment (VC-242D board)

Mode	VTR stop
Signal	Arbitrary
Measurement Point	Display data of page: 3, address: 03
Measuring Instrument	Adjustment remote commander
Adjustment Page	C
Adjustment Address	1F, 20, 22, 29
Specified Value	Bit2, bit3 and bit6 are “0”

Adjusting method:

Order	Page	Address	Data	Procedure
1	0	01	01	Set the data.
2	3	01	30	Set the data, and press PAUSE button.
3	3	02		Check that the data changes to “00”.
4	3	03		Check that bit2, bit3 and bit6 of the data are “00”. (Note)
5	0	01	00	Set the data.

Note: If bit2, bit3 or bit 6 of the data is “1”, there are errors.
For the error contents, see the following table. (For the bit values, refer to “5-4. SERVICE MODE”, “4-3. 3. Bit value discrimination”.)

Bit value of page: 3, address: 03	Error contents
bit 4 = 1	PLL f_0 even channel is defective
bit 5 = 1	PLL f_0 odd channel is defective
bit 6 = 1	LPF f_0 is defective
bit 3 = 1	PLL f_0 final adjustment is defective
bit 2 = 1	PLL f_0 final adjustment time-out

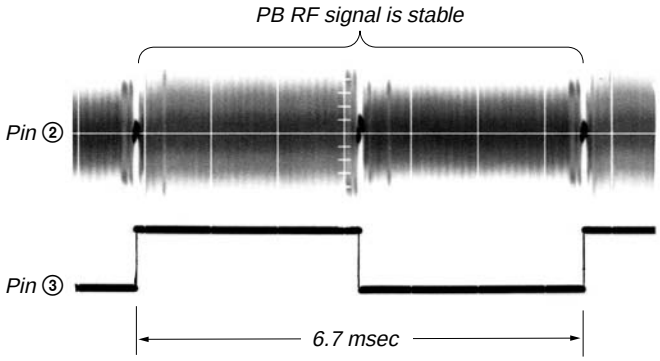

Fig. 5-3-6.

3-4. VIDEO SYSTEM ADJUSTMENTS

Before perform the video system adjustments, check that the specified value of “27MHz Origin Oscillation Adjustment” of “CAMERA SYSTEM ADJUSTMENT” is satisfied.

3-4-1. Base Band Block Adjustments

1. Chroma BPF f_0 Adjustment (VC-242D board)

Set the center frequency of IC1301 chroma band-pass filter.

Mode	Camera
Subject	All black (Cover the lens with the lens cap)
Measurement Point	CH1: Chroma signal terminal of S VIDEO jack (75Ω terminated) CH2: Y signal terminal of S VIDEO jack (75Ω terminated)
Measuring Instrument	Oscilloscope
Adjustment Page	C
Adjustment Address	28
Specified Value	A = 100mVp-p or less B = 200mVp-p or more

Adjusting method:

Order	Page	Address	Data	Procedure
1	0	01	01	Set the data.
2				Check that the burst signal (B) is output to the chroma signal terminal of S VIDEO jack.
3	3	0C	04	Set the data, and press PAUSE button.
4	C	28		Change the data for minimum amplitude of the burst signal level (A). (The data should be “00” to “07”.)
5	C	28		Press PAUSE button.
6	3	0C	00	Set the data, and press PAUSE button.
7				Check that the burst signal level (B) satisfies the specified value.
8	0	01	00	Set the data.

When the data of page: 3, address: 0C, is 04:

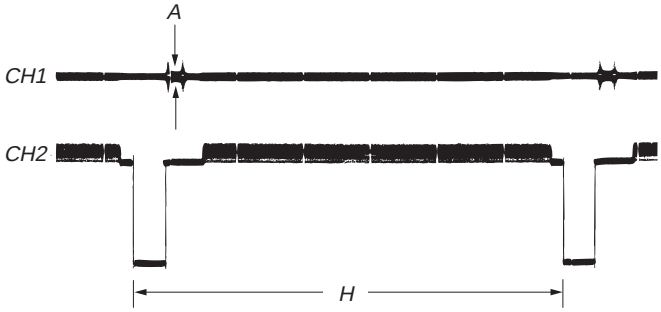

When the data of page: 3, address: 0C, is 00:

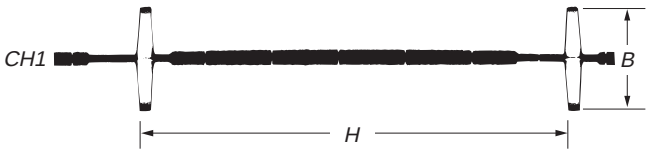

Fig. 5-3-7.

2. S VIDEO OUT Y Level Adjustment (VC-242D board)

Mode	Camera
Subject	Arbitrary
Measurement Point	Y signal terminal of S VIDEO jack (75Ω terminated)
Measuring Instrument	Oscilloscope
Adjustment Page	C
Adjustment Address	25
Specified Value	A = 1000 ± 14mV

Adjusting method:

Order	Page	Address	Data	Procedure
1	0	01	01	Set the data.
2	2	35		Note down the data.
3	2	35	01	Set the data.
4	3	0C	02	Set the data, and press PAUSE button.
5	C	25		Change the data and set the Y signal level (A) to the specified value.
6	C	25		Press PAUSE button.
7	3	0C	00	Set the data, and press PAUSE button.
8	2	35		Set the data that is noted down at step 2.
9	0	01	00	Set the data.

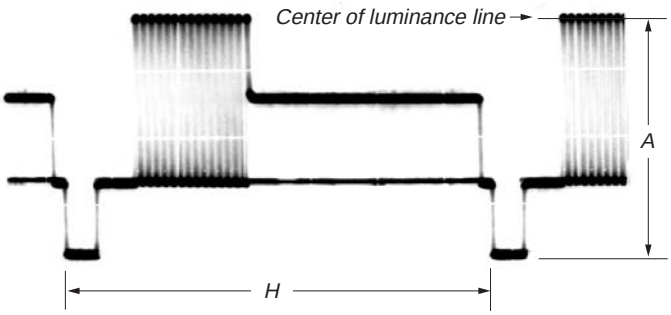

Fig. 5-3-8.

3. S VIDEO OUT Chroma Level Adjustment (VC-242D board)

Mode	Camera
Subject	Arbitrary
Measurement Point	Chroma signal terminal of S VIDEO jack (75Ω terminated) External trigger: Y signal terminal of S VIDEO jack
Measuring Instrument	Oscilloscope
Adjustment Page	C
Adjustment Address	26, 27
Specified Value	Cr level: A = 714 ± 14mV(NTSC) A = 700 ± 14mV(PAL) Cb level: B = 714 ± 14mV(NTSC) B = 700 ± 14mV(PAL) Burst level: C = 286 ± 6mV(NTSC) C = 300 ± 6mV(PAL)

Adjusting method:

Order	Page	Address	Data	Procedure
1	0	01	01	Set the data.
2	2	35		Note down the data.
3	2	35	01	Set the data.
4	3	0C	02	Set the data, and press PAUSE button.
5	C	26		Change the data and set the Cr signal level (A) to the specified value.
6	C	26		Press PAUSE button.
7	C	27		Change the data and set the Cb signal level (B) to the specified value.
8	C	27		Press PAUSE button.
9				Check that the burst signal level (C) is satisfied the specified value.
10	3	0C	00	Set the data, and press PAUSE button.
11	2	35		Set the data that is noted down at step 2.
12	0	01	00	Set the data.

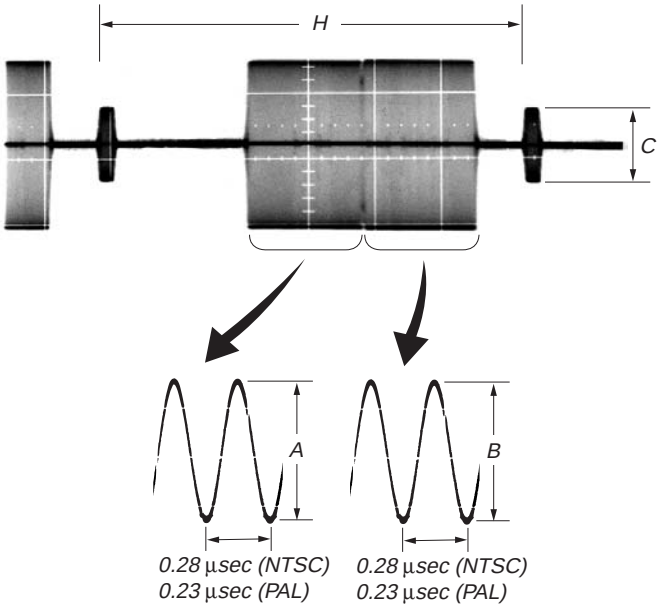

Fig. 5-3-9.

4. VIDEO OUT Y, Chroma Level Check (VC-242D board)

Mode	Camera
Subject	Arbitrary
Measurement Point	VIDEO jack (75Ω terminated)
Measuring Instrument	Oscilloscope
Specified Value	Sync level: A = 286 ± 18mV(NTSC) A = 300 ± 18mV(PAL) Burst level: B = 286 ± 18mV(NTSC) B = 300 ± 18mV(PAL)

Adjusting method:

Order	Page	Address	Data	Procedure
1	2	35		Note down the data.
2	2	35	01	Set the data.
3	3	0C	02	Set the data, and press PAUSE button.
4				Check that the sync signal level (A) satisfies the specified value.
5				Check that the burst signal level (B) satisfies the specified value.
6	3	0C	00	Set the data, and press PAUSE button.
7	2	35		Set the data that is noted down at step 1.
8	0	01	00	Set the data.

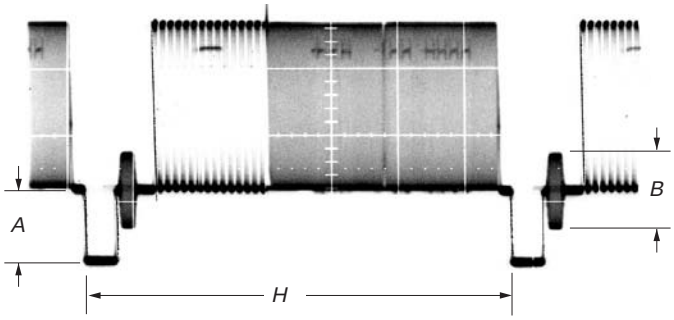

Fig. 5-3-10.

3-4-2. BIST Check

Switch setting:
LCD panel ..... Open

1. Playback System Check

1-1. Preparations for Playback

Order	Page	Address	Data	Procedure
1				Set the POWER switch to VCR position.
2				Connect the adjustment remote commander and set the HOLD switch to ON (SERVICE) position.
3	0	01	01	Set the data.
4	C	42	00	Set the data, and press PAUSE button.
5				Playback the BIST check tape. (XH5-6 (NTSC), XH5-6P (PAL))

Note1: Perform the following checks in the playback mode.
Note2: Use the AC power adaptor or the battery (Info LITHIUM L series).

1-2. IC301 TRX (RF) PB BIST Check

Order	Page	Address	Data	Procedure
1	3	70	04	Set the data, and press PAUSE button.
2	3	70	00	Set the data, and press PAUSE button.
3	3	73		Check that the data is equal to either of the following values. And memorize the case number of the value. NTSC model: 63 (Case1), C5 (Case2), 75 (Case3), D3 (Case4), 59 (Case5), FF (Case6) PAL model: 86 (Case1), AA (Case2), 90 (Case3)
4	3	74		Check that the data is equal to the following value which case number is equal to that of address 73. NTSC model: 84 (Case1), 55 (Case2), 07 (Case3), D6 (Case4), 01 (Case5), D0 (Case6) PAL model: 35 (Case1), 33 (Case2), B6 (Case3)
5	3			If the data of address 73 and address 74 are correct, IC301 TRX (RF) playback system is normal.

1-3. IC301 AUD (ABUS) PB BIST Check

Order	Page	Address	Data	Procedure
1	3	11	04	Set the data, and press PAUSE button.
2	3	12	08	Set the data, and press PAUSE button.
3	3	12	00	Set the data, and press PAUSE button.
4	3	13	03	Set the data, and press PAUSE button.
5	3	14		Check that the data is the following value. NTSC model: 41 PAL model: 2D
6	3	15		Check that the data is the following value. NTSC model: 81 PAL model: 7C
7	3			If the data of address 14 and address 15 are correct, IC301 AUD (ABUS) playback system is normal.

1-4. IC301 VFD PB BIST Check
• EX Y BIST Check

Order	Page	Address	Data	Procedure
1	3	12	10	Set the data, and press PAUSE button.
2	3	12	00	Set the data, and press PAUSE button.
3	3	13	04	Set the data, and press PAUSE button.
4	3	14		Check that the data is the following value. NTSC model: 26 PAL model: 2E
5	3	15		Check that the data is the following value. NTSC model: FA PAL model: 6C
6	3			If the data of address 14 and address 15 are correct, IC301 EX Y playback system is normal.

1-5. IC301 ENCODER BIST Check

• Preparations

Order	Page	Address	Data	Procedure
1	0	01	01	Set the data.
2	8	21	0F	Set the data, and press PAUSE button.

• ENCODER Ya BIST Check

Order	Page	Address	Data	Procedure
1	3	10	8B	Set the data, and press PAUSE button.
2	3	12	10	Set the data, and press PAUSE button.
3	3	12	00	Set the data, and press PAUSE button.
4	3	13	04	Set the data, and press PAUSE button.
5	3	14		Check that the data is the following value. NTSC model: B1 PAL model: 06
6	3	15		Check that the data is the following value. NTSC model: 52 PAL model: 0A
7	3			If the data of address 14 and address 15 are correct, IC301 ENCORDER Ya playback system is normal.

• ENCODER Yb BIST Check

Order	Page	Address	Data	Procedure
1	3	10	8C	Set the data, and press PAUSE button.
2	3	12	10	Set the data, and press PAUSE button.
3	3	12	00	Set the data, and press PAUSE button.
4	3	13	04	Set the data, and press PAUSE button.
5	3	14		Check that the data is the following value. NTSC model: F3 PAL model: 30
6	3	15		Check that the data is the following value. NTSC model: 3F PAL model: 69
7	3			If the data of address 14 and address 15 are correct, IC301 ENCORDER Yb playback system is normal.

1-6. Processing after Completing Playback System Check

Order	Page	Address	Data	Procedure
1	0	01	01	Set the data.
2	C	42	0A	Set the data, and press PAUSE button.
3	8	21	03	Set the data, and press PAUSE button.
4	0	01	00	Set the data.
5				Turn off the power and turn on again.

3-5. AUDIO SYSTEM ADJUSTMENTS

Switch setting:

AUDIO SELECT CH1 ..... MIC
AUDIO SELECT CH2 ..... MIC
+48V CH1 ..... OFF
+48V CH2 ..... OFF
REC SELECT ..... CH1+CH2
WIND (Menu) ..... OFF
REF LEVEL (Menu) ..... –20dB
AGC CH1 (Menu) ..... OFF
AGC CH2 (Menu) ..... OFF
REC LEVEL CH1 ..... Center
REC LEVEL CH2 ..... Center

[Connection of Audio System Measuring Devices]

Connect the audio system measuring devices as shown in Fig. 5-3-11.

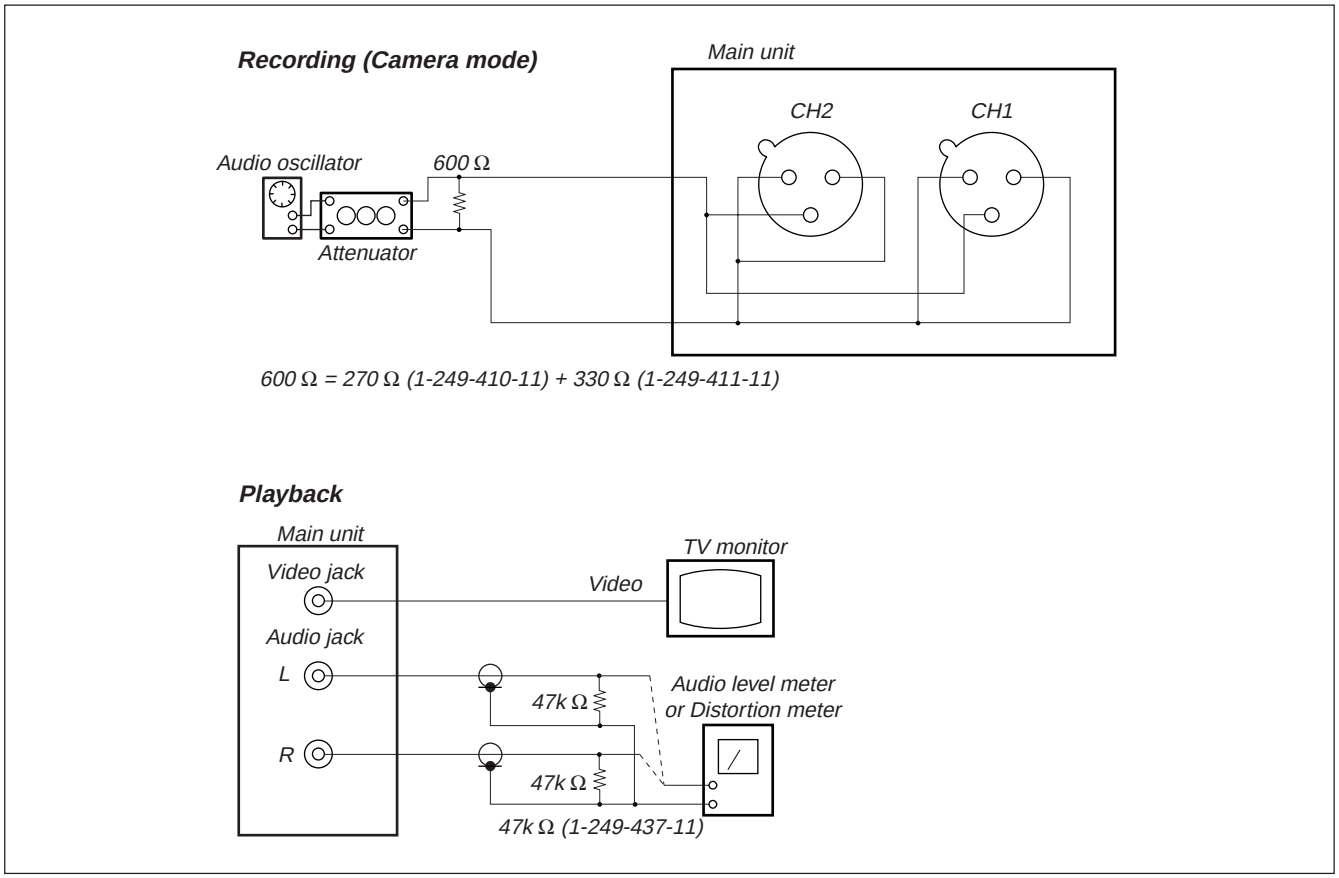

Fig. 5-3-11.

1. Playback Level Check

Mode	VTR playback
Signal	Alignment tape: For audio operation check (XH5-3 (NTSC)) (XH5-3P (PAL))
Measurement Point	Audio CH1 or CH2 terminal of AUDIO jack
Measuring Instrument	Audio level meter and frequency counter
Specified Value	32 kHz mode: 1 kHz, +8.2 ± 2.0dBs 48 kHz mode: 1 kHz, +8.2 ± 2.0dBs 44.1 kHz mode: The 7.35kHz signal level during EMP OFF is +8.2 ± 2.0dBs. The 7.35kHz signal level during EMP ON is –6.2 ± 2.0 dB from the signal level during EMP OFF.

Checking Method

1) Check that the playback signal level is the specified value.

2. Overall Level Characteristics Check

Mode	Camera recording and playback
Signal	400Hz, –60 dBs signal: XLR jack CH1 and CH2
Measurement Point	Audio CH1 or CH2 terminal of AUDIO jack
Measuring Instrument	Audio level meter
Specified Value	–11.8 ± 3.0dBs

Checking Method

1) Input the 400Hz, –60dBs signal in the XLR jack.
2) Record in the camera mode.
3) Playback the recorded section.
4) Check that the 400Hz signal level is the specified value.

3. Overall Distortion Check

Mode	Camera recording and playback
Signal	400Hz, –60dBs signal: XLR jack CH1 and CH2
Measurement Point	Audio CH1 or CH2 terminal of AUDIO jack
Measuring Instrument	Audio distortion meter
Specified Value	Below 0.4% (200Hz to 6kHz BPF ON)

Checking Method

1) Input the 400Hz, –60dBs signal in the XLR jack.
2) Record in the camera mode.
3) Playback the recorded section.
4) Check that the distortion is the specified value.

4. Overall Noise Level Check

Mode	Camera recording and playback
Signal	No signal: Insert a shorting plug in the XLR jack
Measurement Point	Audio CH1 or CH2 terminal of AUDIO jack
Measuring Instrument	Audio level meter
Specified Value	Below –45dBs (IHF-A filter ON, 20kHz LPF ON)

Checking Method

1) Insert a shorting plug in the XLR jack.
2) Record in the camera mode.
3) Playback the recorded section.
4) Check that the noise level is the specified value.

5. Overall Separation Check

Mode	Camera recording and playback
Signal	400Hz, –60dBs signal: XLR jack <CH2> [CH1] (Insert a shorting plug in the XLR jack <CH1> [CH2])
Measurement Point	Audio <CH1> [CH2] terminal of AUDIO jack
Measuring Instrument	Audio level meter
Specified Value	Below –40dBs

< > : CH1 check
[ ] : CH2 channel check

Checking Method

1) Input the 400Hz, –60dBs signal in the <CH2> [CH1] terminal of the XLR jack only.
2) Record in the camera mode.
3) Playback the recorded section.
4) Check that the signal level of the audio <CH1> [CH2] terminal is the specified value.

5-4. SERVICE MODE

4-1. ADJUSTMENT REMOTE COMMANDER

The adjustment remote commander is used for changing the calculation coefficient in signal processing, EVR data, etc. The adjustment remote commander performs bi-directional communication with the unit using the remote commander signal line (LANC). The resultant data of this bi-directional communication is written in the non-volatile memory.

1. Using the adjustment remote commander

1) Connect the adjustment remote commander to the LANC terminal.
2) Set the HOLD switch of the adjustment remote commander to "HOLD" (SERVICE position). If it has been properly connected, the LCD on the adjustment remote commander will display as shown in Fig. 5-4-1.

Fig. 5-4-1

3) Operate the adjustment remote commander as follows.
   - Changing the page
     The page increases when the EDIT SEARCH+ button is pressed, and decreases when the EDIT SEARCH– button is pressed. There are altogether 16 pages, from 0 to F.

Hexadecimal notation	0	1	2	3	4	5	6	7	8	9	A	B	C	D	E	F
LCD Display	0	1	2	3	4	5	6	7	8	9	A	b	c	d	E	F
Decimal notation conversion value	0	1	2	3	4	5	6	7	8	9	10	11	12	13	14	15

   - Changing the address
     The address increases when the FF (▶▶) button is pressed, and decreases when the REW (◀◀) button is pressed. There are altogether 256 addresses, from 00 to FF.
   - Changing the data (Data setting)
     The data increases when the PLAY (▶) button is pressed, and decreases when the STOP (■) button is pressed. There are altogether 256 data, from 00 to FF.
   - Writing the adjustment data
     The PAUSE button must be pressed to write the adjustment data (B, C, D, F, 8 page) in the nonvolatile memory. (The new adjusting data will not be recorded in the nonvolatile memory if this step is not performed.)
4) After completing all adjustments, turn off the main power supply once.

2. Precautions upon using the adjustment remote commander

Mishandling of the adjustment remote commander may erase the correct adjustment data at times. To prevent this, it is recommended that all adjustment data be noted down before beginning adjustments and new adjustment data after each adjustment.

4-2. DATA PROCESS

The calculation of the DDS display and the adjustment remote commander display data (hexadecimal notation) are required for obtaining the adjustment data of some adjustment items. In this case, after converting the hexadecimal notation to decimal notation, calculate and convert the result to hexadecimal notation, and use it as the adjustment data. Indicates the hexadecimal-decimal conversion table.

Hexadecimal-decimal Conversion Table

②

Upper digit of hexadecimal \ Lower digit of hexadecimal	0	1	2	3	4	5	6	7	8	9	A (A)	B (b)	C (c)	D (d)	E (E)	F (F)
0	0	1	2	3	4	5	6	7	8	9	10	11	12	13	14	15
1	16	17	18	19	20	21	22	23	24	25	26	27	28	29	30	31
2	32	33	34	35	36	37	38	39	40	41	42	43	44	45	46	47
3	48	49	50	51	52	53	54	55	56	57	58	59	60	61	62	63
4	64	65	66	67	68	69	70	71	72	73	74	77	76	77	78	79
5	80	81	82	83	84	85	86	87	88	89	90	91	92	93	94	95
6	96	97	98	99	100	101	102	103	104	105	106	107	108	109	110	111
7	112	113	114	115	116	117	118	119	120	121	122	123	124	125	126	127
8	128	129	130	131	132	133	134	135	136	137	138	139	140	141	142	143
9	144	145	146	147	148	149	150	151	152	153	154	155	156	157	158	159
A (A)	160	161	162	163	164	165	166	167	168	169	170	171	172	173	174	175
① B (b)	176	177	178	179	180	181	182	183	184	185	186	187	188	189	190	191
C (c)	192	193	194	195	196	197	198	199	200	201	202	203	204	205	206	207
D (d)	208	209	210	211	212	213	214	215	216	217	218	219	220	221	222	223
E (E)	224	225	226	227	228	229	230	231	232	233	234	235	236	237	238	239
F (F)	240	241	242	243	244	245	246	247	248	249	250	251	252	253	254	255

Note: The characters shown in the parenthesis ( ) shown the display on the adjustment remote commander.

(Example) If the DDS display or the adjustment remote commander shows BD (bd);
Because the upper digit of the adjustment number is B (b), and the lower digit is D (d), the meeting point "189" of ① and ② in the above table is the corresponding decimal number.

Table. 5-4-1.

4-3. SERVICE MODE

1. Setting the Test Mode

Page D	Address 10

Data	Function
00	Normal
01	Forced camera power ON
02	Forced VTR power ON
03	Forced camera + VTR power ON
05	Forced memory power ON

- Before setting the data , select page: 0, address: 01, and set data: 01.
- For page D, the data set is recorded in the non-volatile memory by pressing the PAUSE button of the adjustment remote commander. In this case, take note that the test mode will not be exited even when the main power is turned off.
- After completing adjustments/repairs, be sure to return the data of this address to 00, and press the PAUSE button of the adjustment remote commander.
  Select page: 0, address: 01, and set data: 00.

2. Emergence Memory Address

Page C	Address F4 to FF

Address	Contents
F4	EMG code when first error occurs
F6	Upper: MSW code when shift starts when first error occurs Lower: MSW code when first error occurs
F7	Lower: MSW code to be moved when first error occurs
F8	EMG code when second error occurs
FA	Upper: MSW code when shift starts when second error occurs Lower: MSW code when second error occurs
FB	Lower: MSW code to be moved when second error occurs
FC	EMG code when last error occurs
FE	Upper: MSW code when shift starts when last error occurs Lower: MSW code when last error occurs
FF	Lower: MSW code to be moved when last error occurs

When no error occurs in this unit, data “00” is written in the above addresses (F4 to FF). when first error occurs in the unit, the data corresponding to the error is written in the first emergency address (F4 to F7). In the same way, when the second error occurs, the data corresponding to the error is written in the second emergency address (F8 to FB). Finally, when the last error occurs, the data corresponding to the error is written in the last emergency address (FC to FF).

Note: After completing adjustments, be sure to initialize the data of addresses F4 to FF to “00”.

Initializing method:

1) Select page: 0, address: 01, and set data: 01.
2) Select page: 3, address: 01, set data: 37, and press the PAUSE button.
3) Select page: 0, address: 01, and set data: 00.

2-1. EMG Code (Emergency Code)

Codes corresponding to the errors which occur are written in addresses F4, F8 and FC. The type of error indicated by the code are shown in the following table.

Code	Emergency Type
00	No error
10	Loading motor emergency during loading
11	Loading motor emergency during unloading
22	T reel emergency during normal rotation
23	S reel emergency during normal rotation
24	T reel emergency (Short circuit between S reel terminal and T reel terminal)
30	FG emergency at the start up of the capstan
40	FG emergency at the start up of the drum
42	FG emergency during normal rotation of the drum

2-2. MSW Code

MSW when errors occur:
Information on MSW (mode SW) when errors occur
MSW when movement starts:
Information on MSW when movements starts when the mechanism position is moved (When the L motor is moved)
MSW of target of movement:
Information on target MSW of movement when the mechanism position is moved

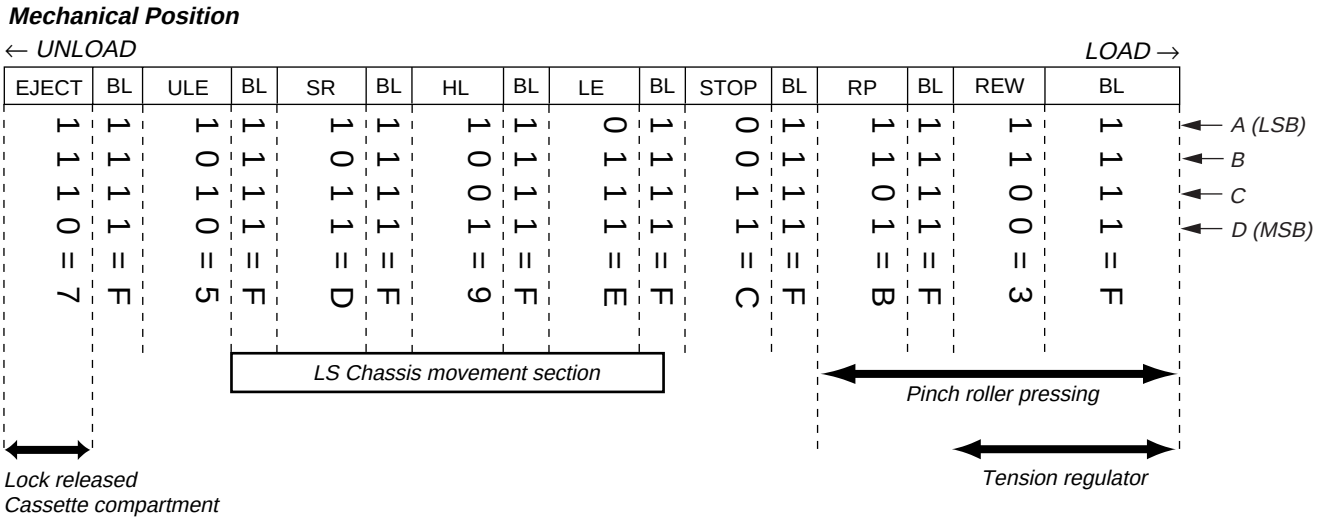

Position	Code	Contents
EJECT	7	Position at which the cassette component lock is released, at the farthest unload side mechanically at which the mechanism can move no further in the UNLOAD direction.
BL	F	BLANK code, at the boundary between codes.
USE	5	EJECT completion position. When the cassette is ejected, the mechanism will stop at this position. Cassette IN standby. The guide will start protruding out as the mechanism moves towards the LOAD position.
SR	D	Code during loading.
HL	9	Guide loading are performed here.
LE	E	Current limiter turned off.
STOP	C	Stop position in the loading state. The pinch roller separates, the tension regulator returns, and the brake is imposed on both reels.
RP	B	PB, REC, CUE, PAUSE positions. When pinch roller is pressed, and the tension regulator is ON, the mechanism is operating at this position in modes in which normal images are shown.
REW	3	REW position. The tension regulator is half on. This position is not used except for the REW mode.

3. Bit value discrimination

Bit values must be discriminated using the display data of the adjustment remote commander for following items. Use the table below to discriminate if the bit value is “1” or “0”.

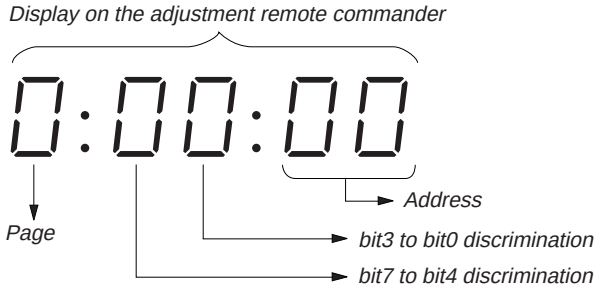

	Display on the adjustment remote commander	Bit values			
		bit3 or bit7	bit2 or bit6	bit1 or bit5	bit0 or bit4
	0	0	0	0	0
	1	0	0	0	1
	2	0	0	1	0
	3	0	0	1	1
	4	0	1	0	0
	5	0	1	0	1
	6	0	1	1	0
	7	0	1	1	1
	8	1	0	0	0
	9	1	0	0	1
	A (A)	1	0	1	0
	B (b)	1	0	1	1
	C (c)	1	1	0	0
	D (d)	1	1	0	1
Ⓑ	E (E)	1	1	1	0
	F (F)	1	1	1	1

Example: If “8E” is displayed on the adjustment remote commander, the bit values for bit7 to bit4 are shown in the Ⓐ column, and the bit values for bit3 to bit0 are shown in the Ⓑ column.

4. Switch check (1)

Page 2	Address 43

Bit	Function	When bit value=1	When bit value=0
0	VTR MODE SW (CF-4980 block)	OFF	ON
1	CAM STBY SW (CF-4980 block)	OFF	ON
2	START/STOP SW (CF-4980 block)	OFF	ON
3	EJECT SW (CF-4980 block)	OFF	ON
4	CC DOWN SW (Mechanism chassis)	OFF (UP)	ON (DOWN)
5	PHOTO FREEZE SW (CF-4980 block)	OFF	ON
6	PHOTO STBY SW (CF-4980 block)	OFF	ON
7			

Using method:

1) Select page: 2, address: 43.
2) By discriminating the bit value of display data, the state of the switch can be discriminated.

5. Switch check (2)

Page 2	Address 5F to 67

Using method:

1) Select page: 2, address: 5F to 67.
2) By discriminating the display data, the pressed key can be discriminated.

Address	Data						
	00 (00 to 0A)	19 (0B to 24)	32 (25 to 44)	59 (45 to 6E)	85 (6F to 9F)	B8 (A0 to D4)	EE (D5 to FF)
5F (KEY AD8) (IC1104 ⑫)	PHOTO (PHOTO REC) (CF-4980)	CUSTOM PRESET (MA-386) (S1100)	EXECUTE (KP-010) (S550)				No key input
60 (KEY AD0) (IC1104 ⑬)	STOP (FK-076) (S500)	REW (FK-076) (S502)	PLAY (FK-076) (S504)	REC (FK-076) (S506,507)	EDIT SEARCH+ (FK-076)(S509)	EDIT SEARCH– (FK-076)(S511)	No key input
61 (KEY AD1) (IC1104 ⑭)	PAUSE (FK-076) (S501)	FF (FK-076) (S503)	SLOW (FK-076) (S505)	AUDIO DUB (FK-076) (S508)	END SEARCH (FK-076) (S510)		No key input
62 (KEY AD2) (IC1104 ⑮)	FADER (FP-189)	BACK LIGHT (FP-189)	SPOT LIGHT (FP-189)	INDEX (FP-188)	FOCUS (INFINITY) (FP-188)	FOCUS (AUTO) (PUSH AUTO) (FP-188)	FOCUS (MANUAL) (FP-188)
63 (KEY AD3) (IC1104 ⑯)	AE SHIFT (MK-014) (S001)	WHITE BALANCE (MK-014)(S002)	SHUTTER (MK-014) (S003)	GAIN (MK-014) (S004)	AUTO LOCK (HOLD) (MK-014)(S005)	AUTO LOCK (AUTO LOCK) (MK-014)(S005)	AUTO LOCK (OFF) (MK-014)(S005)
64 (KEY AD4) (IC1104 ⑰)	TITLE (CK-093) (S250)	DIGITAL EFFECT (CK-093)(S255)	MENU (CK-093) (S258)	MEMORY MIX (CK-093) (S260)	ZEBRA (100%) (CK-093) (S263)	ZEBRA (OFF) (CK-093) (S263)	ZEBRA (70%) (CK-093) (S263)
65 (KEY AD5) (IC1104 ⑱)	DISPLAY (CK-093) (S251)	TC/U-BIT (CK-093) (S253)	IRIS (ED-4980)	REC LEVEL (FP-194)	DATA CODE (CK-093) (S261)	PANEL CLOSE (FP-197)	PANEL OPEN (FP-197)
66 (KEY AD6) (IC1104 ⑲)	MEMORY INDEX (CK-093)(S252)	MEMORY + (CK-093) (S254)	MEMORY – (CK-093) (S257)	MEMORY DELETE (CK-093)(S259)	MEMORY PLAY (CK-093)(S262)	PANEL REVERSE (FP-197)	PANEL NORMAL (FP-197)
67 (KEY AD7) (IC1104 ⑳)	VOLUME – (FP-196)	VOLUME + (FP-196)	LCD BRIGHT – (FP-196)	LCD BRIGHT + (FP-196)			No key input

6. Record of Use check

Note: When replacing the drum assembly, initialize the data of address: A2 to AA.

Page 2	Address A2 to AA

Address	Function		Remarks
A2	Drum rotation counted time (BCD code)	Minutes	
A3		Hour (L)	10th place digit and 1st place digit of counted time (decimal digit)
A4		Hour (H)	1000th place digit and 100th place digit of counted time (decimal digit)
A5	User initial power on date (BCD code)	Year	After setting the clock, set the date of power on next.
A6		Month	
A7		Day	
A8	Final condensation occurrence date (BCD code)	Year	
A9		Month	
AA		Day	

Using method:

1) The record of use data is displayed at page: 2, addresses: A2 to AA.
   Note: This data will be erased (reset) when the cabinet (R) assy (CK-093 board) is removed.

Initializing method:

1) Using the adjustment remote commander, select the object address and set data: 00.

7. Record of Self-diagnosis check

Page 2	Address B0 to C6

Address	Self-diagnosis code
B0	“Repaired by” code (Occurred 1st time) *1
B1	“Block function” code (Occurred 1st time)
B2	“Detailed” code (Occurred 1st time)
B4	“Repaired by” code (Occurred 2nd time) *1
B5	“Block function” code (Occurred 2nd time)
B6	“Detailed” code (Occurred 2nd time)
B8	“Repaired by” code (Occurred 3rd time) *1
B9	“Block function” code (Occurred 3rd time)
BA	“Detailed” code (Occurred 3rd time)
BC	“Repaired by” code (Occurred 4th time) *1
BD	“Block function” code (Occurred 4th time)
BE	“Detailed” code (Occurred 4th time)
C0	“Repaired by” code (Occurred 5th time) *1
C1	“Block function” code (Occurred 5th time)
C2	“Detailed” code (Occurred 5th time)
C4	“Repaired by” code (Occurred the last time) *1
C5	“Block function” code (Occurred the last time)
C6	“Detailed” code (Occurred the last time)

*1 : “01” → “C”, “03” → “E”

Using method:

1) The past self-diagnosis codes are displayed at page: 2, addresses: BC to C6. Refer to “SELF-DIAGNOSIS FUNCTION” for detail of the self-diagnosis code.
   Note: This data will be erased (reset) when the cabinet (R) assy (CK-093 board) is removed.

8. HRS METER (Hours meter)

The data of "HRS METER" of the menu are memorized in addresses 00 to 13 of page A. (VC-242D board IC1105 (EEPROM)). When replacing the drum assy. capstan motor or mechanism deck, reset the data of the addresses corresponding to the replaced parts to "00".
Note: Same data is memorised in two addresses, so be sure to reset both addresses.

Page A	Address 00 to 13

Address	Name	Contents
00	OPERATION (L)	Power supply operation counted time (Lower digits)
01	OPERATION (H)	Power supply operation counted time (Upper digits)
02	DRUM RUN (L)	Drum rotation counted time (Lower digits)
03	DRUM RUN (H)	Drum rotation counted time (Upper digits)
04	TAPE RUN (L)	Capstan rotation counted time (Lower digits)
05	TAPE RUN (H)	Capstan rotation counted time (Upper digits)
06	THREADING (L)	Unloading counter (Lower digits)
07	THREADING (H)	Unloading counter (Upper digits)
08	CHECK SUM (L)	Check sum (Lower digits)
09	CHECK SUM (H)	Check sum (Upper digits)
0A	OPERATION (L)	Power supply operation counted time (Lower digits)
0B	OPERATION (H)	Power supply operation counted time (Upper digits)
0C	DRUM RUN (L)	Drum rotation counted time (Lower digits)
0D	DRUM RUN (H)	Drum rotation counted time (Upper digits)
0E	TAPE RUN (L)	Capstan rotation counted time (Lower digits)
0F	TAPE RUN (H)	Capstan rotation counted time (Upper digits)
10	THREADING (L)	Unloading counter (Lower digits)
11	THREADING (H)	Unloading counter (Upper digits)
12	CHECK SUM (L)	Check sum (Lower digits)
13	CHECK SUM (H)	Check sum (Upper digits)

Resetting method:
1) Select page: 0, address: 01, and set data: 01.
2) Select the addresses indicated by ● in the following table corresponding to the replaced parts, and input data: 00.
   Note: Press the PAUSE button of the adjustment remote commander each time to set the data.

Replaced parts	Address		
	02, 03, 0C, 0D (DRUM RUN)	04, 05, 0E, 0F (TAPE RUN)	06, 07, 10, 11 (THREADING)
Mechanism deck	●	●	●
Drum assy	●		
Capstan motor		●	

3) Select page: 0, address: 01, and set data: 01.

HRS METER data re-writing procedure
When a user forgets a password, replace IC1105 (EEPROM) on VC-242D board. At this time, replace IC1105 in the following order to copy the HRS METER data.

Processing before replacing IC1105:
1) Note down the data of page: A, address: 00 to 13.

Processing after replacing IC1105 :
1) Select page: 0, address: 01, set data: 01.
2) Select page: A, address: 00 to 13, and input the data noted down.
   Note: Press the PAUSE button of the adjustment remote commander each time to set the data.
3) Select page: 0, address: 01, set data: 00.

SECTION 6
REPAIR PARTS LIST

6-1. EXPLODED VIEWS

NOTE:

- -XX, -X mean standardized parts, so they may have some differences from the original one.
- Items marked "*" are not stocked since they are seldom required for routine service. Some delay should be anticipated when ordering these items.
- The mechanical parts with no reference number in the exploded views are not supplied.

The components identified by mark ⚠ or dotted line with mark ⚠ are critical for safety. Replace only with part number specified.

Les composants identifiés par une marque ⚠ sont critiques pour la sécurité. Ne les remplacer que par une pièce portant le numéro spécifié.

6-1-1. OVERALL SECTION-1

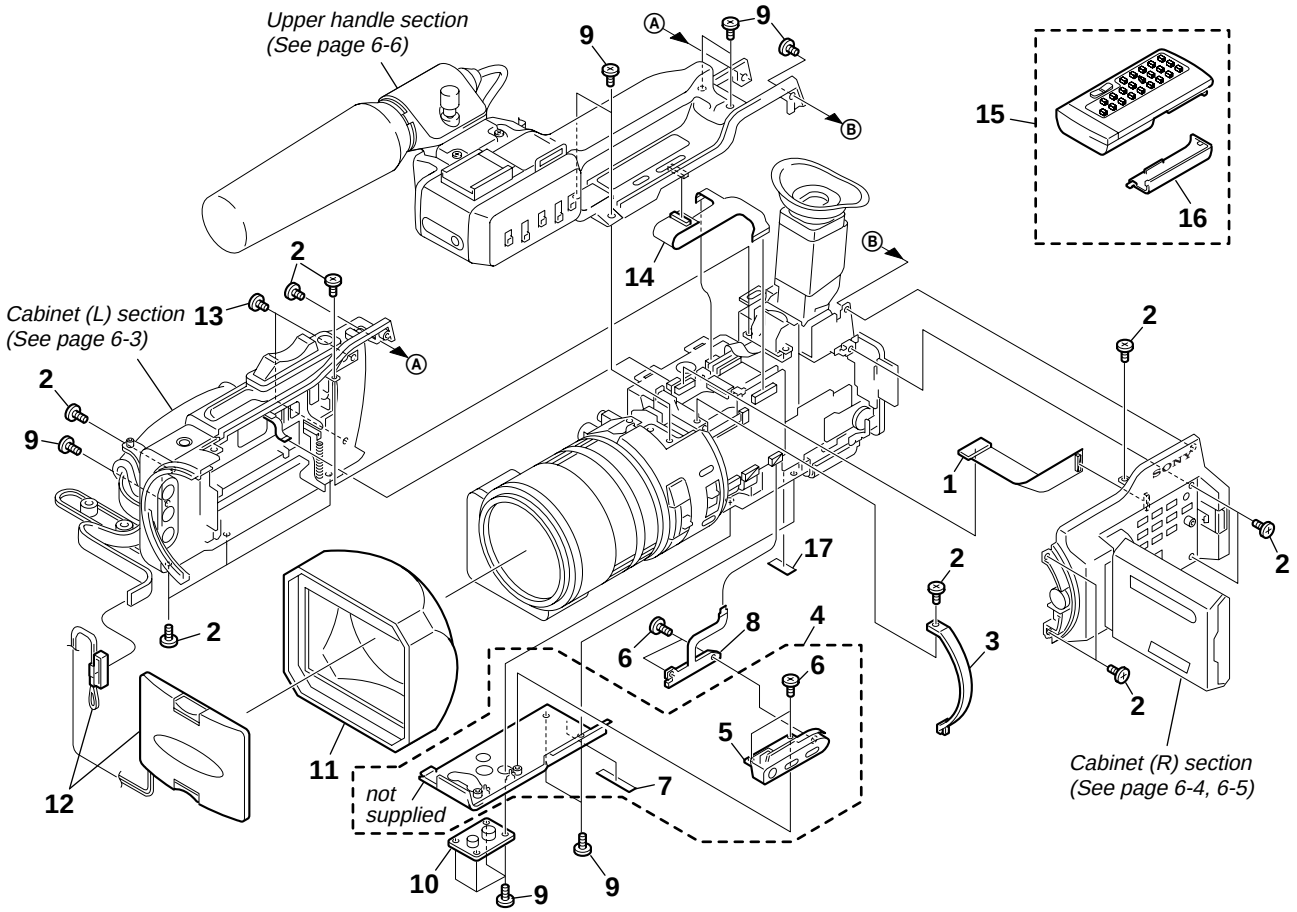

Ref. No.	Part No.	Description	Remarks
1	1-678-055-21	FP-187 FLEXIBLE BOARD	
2	3-053-121-21	BOLT (M2), SPRING	
3	3-060-683-01	PLATE, CF ORNAMENTAL	
4	X-3950-595-1	BOTTOM (D) ASSY, CABINET	
5	X-3950-728-1	COVER ASSY, FBS (SERVICE)	
6	3-948-339-61	TAPPING	
7	3-062-455-01	FOOT(B), RUBBER	
8	1-678-057-21	FP-189 FLEXIBLE BOARD	
9	3-053-121-41	BOLT (M2), SPRING	
10	3-963-940-02	TABLE, TRIPOD	
11	X-3950-590-1	HOOD ASSY, LENS	
12	X-3950-568-1	CAP ASSY, HOOD	
13	3-053-121-61	BOLT (M2), SPRING	
14	1-678-067-21	FP-200 FLEXIBLE BOARD	
15	1-475-950-21	REMOTE COMMANDER (RMT-811)	
16	3-053-056-01	LID,BATTERY CASE (FOR RMT-811)	
* 17	3-704-367-01	LABEL (FAROUDJA)	

6-1-2. OVERALL SECTION-2

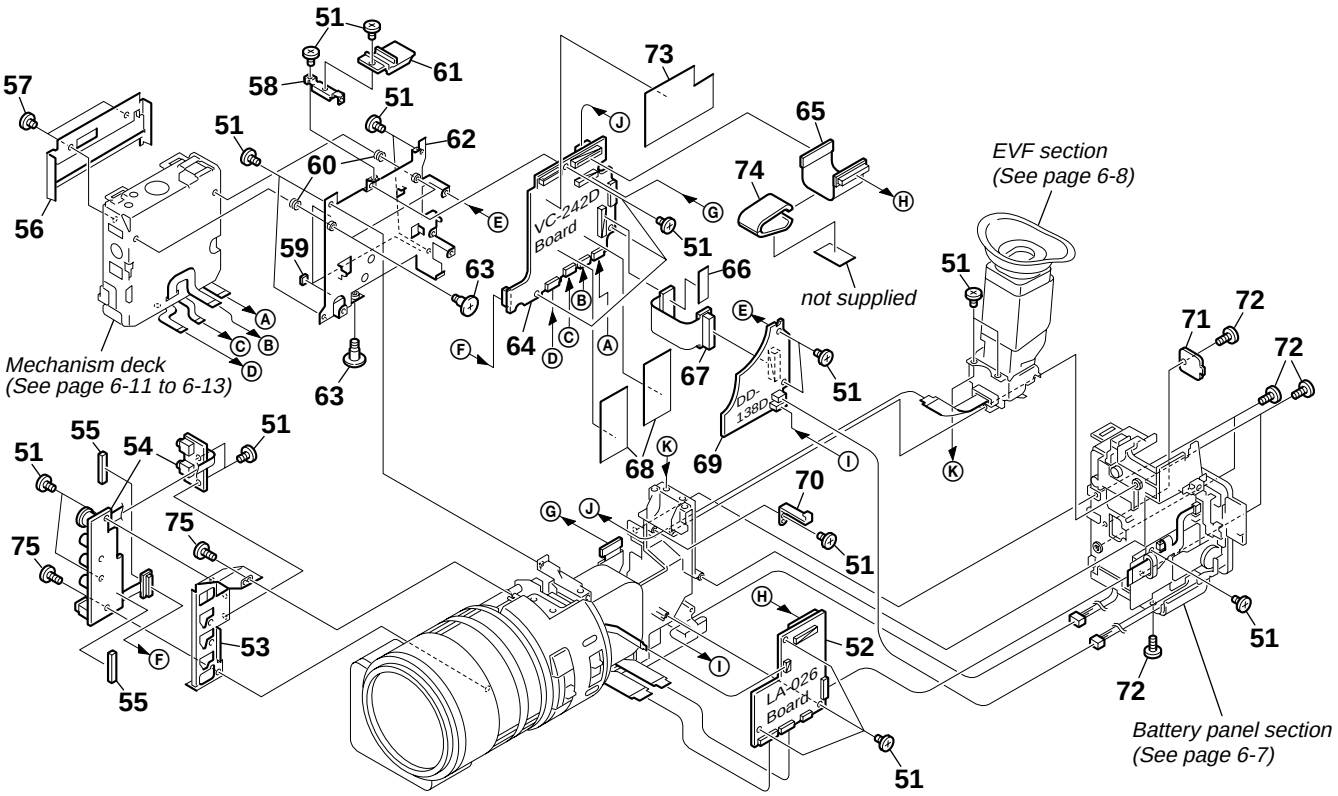

Ref. No.	Part No.	Description	Remarks
51	3-053-121-11	BOLT (M2), SPRING	
52	A-7074-401-A	LA-026 BOARD, COMPLETE	
53	3-060-682-01	FRAME, JK	
54	A-7074-402-A	JK-190 BOARD, COMPLETE	
* 55	3-053-354-01	CUSHION, CD FLEXIBLE	
56	3-060-673-01	LID,LD OUTER	
57	3-056-233-11	SCREW (M2), LOCK ACE, P2	
58	3-060-684-01	JOINT, LA	
59	3-975-921-01	SHEET, VIBRATION PROOF	
60	3-061-679-02	SPRING, MD GROUND	
61	3-060-789-01	RETAINER, FLEXIBLE	
62	X-3950-571-1	FRAME ASSY, MD	
63	3-988-464-01	SCREW (M2), STEP	
64	A-7096-243-A	VC-242D BOARD, COMPLETE (SERVICE)	
65	1-678-054-21	FP-186 FLEXIBLE BOARD	
66	3-061-053-01	SHEET, FP191	
67	1-678-059-21	FP-191 FLEXIBLE BOARD	
68	3-061-516-01	SHEET, RF FLEXIBLE	
69	A-7074-466-A	DD-138D BOARD, COMPLETE	
70	3-060-787-01	CLAMP, FLEXIBLE	
71	3-060-677-01	COVER, CPC	
72	3-053-121-41	BOLT (M2), SPRING	
* 73	3-062-779-01	SHEET (VC)	
74	1-469-830-11	FILTER, EMI (US)	
75	3-053-121-21	BOLT (M2), SPRING	

6-1-3. CABINET (L) SECTION

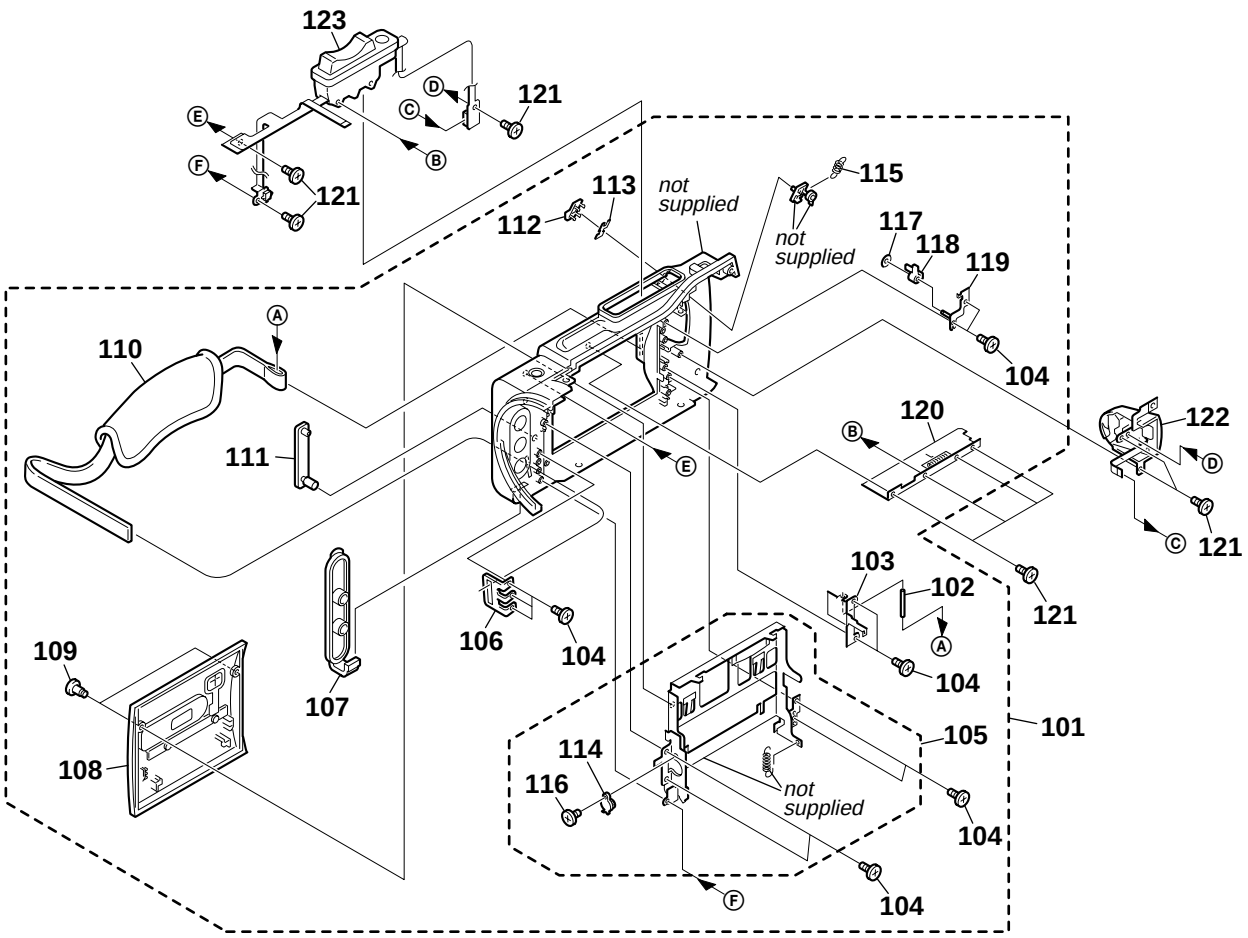

Ref. No.	Part No.	Description	Remarks
101	X-3950-591-1	CABINET (L) (D) ASSY (US)	
101	X-3950-687-1	CABINET (L) (D) ASSY (AEP)	
102	3-703-357-08	PIN(DIA. 1.6 SERISE)	
103	3-060-550-01	BRACKET (REAR), GRIP	
104	3-948-339-01	SCREW, TAPPING	
105	X-3950-561-1	CS ASSY	
106	3-051-871-01	BRACKET (FRONT), BELT	
107	3-060-540-11	COVER (AV), JACK	
108	X-3950-592-1	LID(D) ASSY, CASSETTE	
109	3-060-790-01	SCREW (M2 STEP)	
110	3-060-548-01	BELT, GRIP	
111	3-060-541-11	COVER (L), JACK	

Ref. No.	Part No.	Description	Remarks
112	3-060-551-01	KNOB, EJECT	
113	3-060-549-01	SHEET, EJECT	
114	4-634-290-11	DAMPER	
115	3-060-554-01	SPRING, TENSION	
116	3-968-729-81	SCREW (M2), LOCK ACE, P2	
117	3-669-465-01	WASHER (1.5), STOPPER	
118	3-060-553-01	LEVER, EJECT	
119	X-3950-585-1	SHEET METAL ASSY, EJECT	
120	X-3950-562-1	SLIDER ASSY	
121	3-948-339-61	TAPPING	
122	1-476-075-21	SWITCH BLOCK, CONTROL (PS-4980)	
123	1-476-025-21	SWITCH BLOCK, CONTROL (CF-4980)	

6-1-4. CABINET (R) SECTION-1

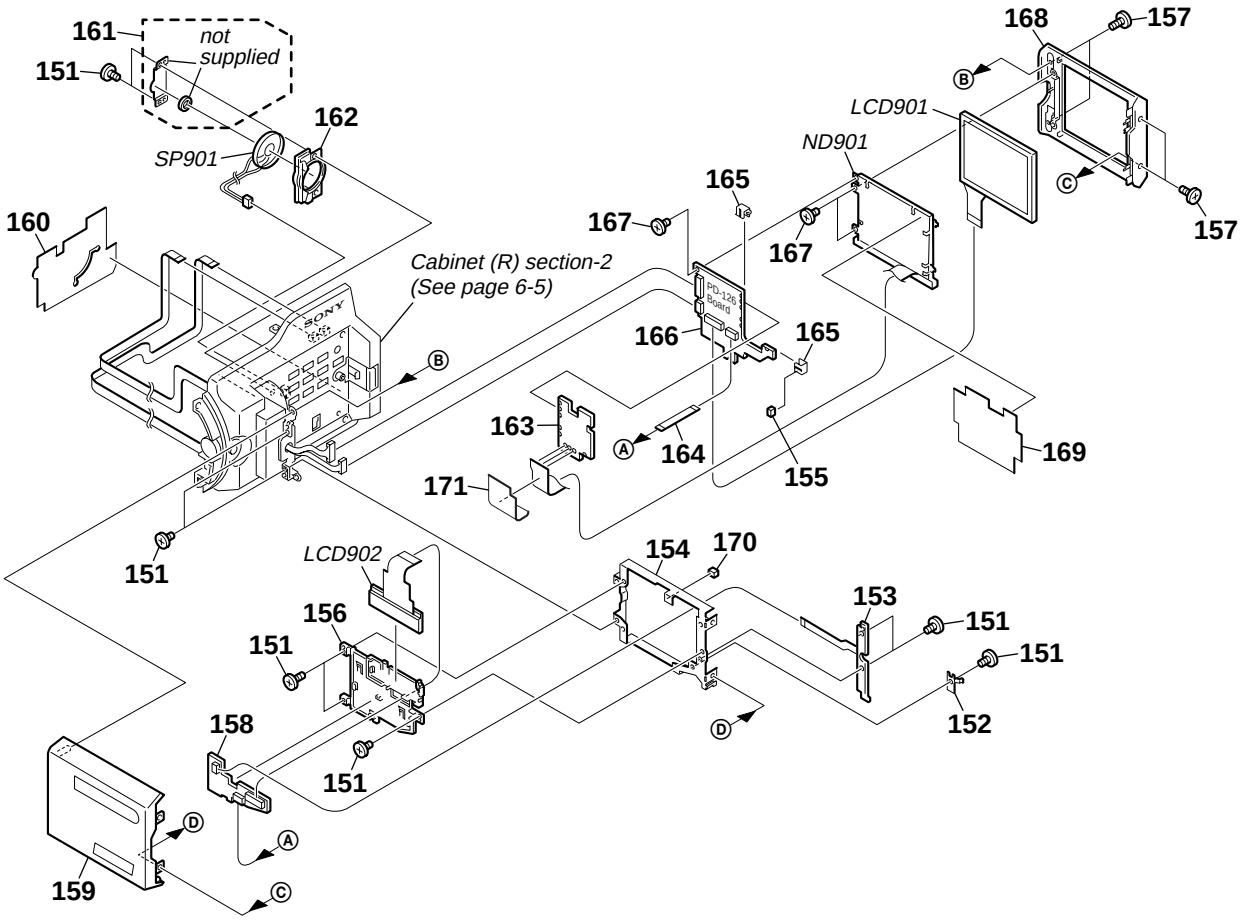

Ref. No.	Part No.	Description	Remarks
151	3-053-121-11	BOLT (M2), SPRING	
* 152	3-060-698-01	RETAINER, BL	
153	1-678-063-21	FP-196 FLEXIBLE BOARD	
* 154	3-060-688-01	FRAME, LCD	
155	3-061-509-01	PAD(RIGHT), PD	
* 156	3-060-687-01	HOLDER, PANEL	
157	3-053-121-41	BOLT (M2), SPRING	
158	A-7074-414-A	HL-011 BOARD, COMPLETE	
159	X-3950-598-1	CABINET (C) (D) ASSY, P	
160	3-060-796-01	SHEET, R FLEXIBLE PROTECTION	
* 161	X-3950-577-1	PLATE ASSY, SP RETAINER	
* 162	3-060-686-01	HOLDER, SPEAKER	
⚠163	1-418-876-11	TRANSFORMER UNIT, INVERTER	

Ref. No.	Part No.	Description	Remarks
164	1-678-062-11	FP-195 FLEXIBLE BOARD	
* 165	3-051-232-01	CLIP, PCB	
166	A-7096-158-A	PD-126 BOARD, COMPLETE (SERVICE)	
167	3-989-735-11	SCREW (M1.7), LOCK ACE, P2	
168	X-3950-597-1	CABINET (M) ASSY, P	
169	3-060-704-01	SHEET (N), BL SHIELD	
170	3-061-510-01	PAD(UPPER), PD	
* 171	3-062-196-01	SHEET, BL INSULATING	
LCD901	8-753-050-52	ACX300CK-J	
LCD902	A-7096-156-A	PANEL BLOCK ASSY, INDICATION	
⚠ND901	1-517-931-11	TUBE, FLUORESCENT,COLD CATHODE	
SP901	1-529-590-11	SPEAKER (2.0CM)	

Note :
The components identified by mark ⚠ or dotted line with mark ⚠ are critical for safety.
Replace only with part number specified.

Note :
Les composants identifiés par une marque ⚠ sont critiques pour la sécurité.
Ne les remplacer que par une pièce portant le numéro spécifié.

6-1-5. CABINET (R) SECTION-2

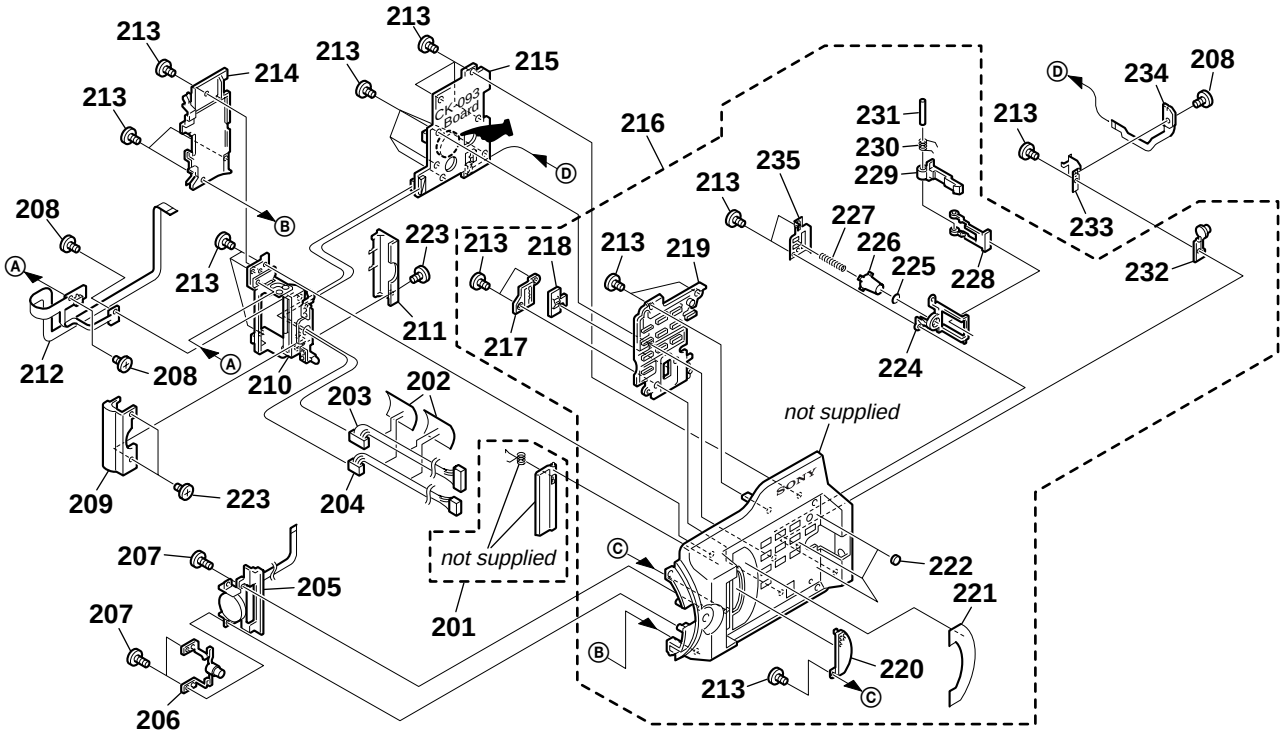

: BT250 (Lithium battary) CK board on the mount position.(See page 4-59)

Ref. No.	Part No.	Description	Remarks
201	X-3950-599-1	DOOR (D) ASSY, BLIND	
202	3-060-795-01	TAPE, HARNESS FIXED	
203	1-960-558-11	HARNESS (CP-094) (14P)	
204	1-960-557-11	HARNESS (CP-093) (8P)	
205	1-476-183-11	SWITCH BLOCK, CONTROL (ED-4980)	
206	3-060-689-01	BUTTON, BRIGHT	
207	3-053-121-21	BOLT (M2), SPRING	
208	3-989-735-11	SCREW (M1.7), LOCK ACE, P2	
209	3-060-693-11	COVER (FRONT), HINGE	
210	X-3950-576-1	HINGE ASSY	
211	3-060-694-11	COVER (REAR), HINGE	
212	1-678-064-21	FP-197 FLEXIBLE BOARD	
213	3-053-121-11	BOLT (M2), SPRING	
* 214	3-060-690-01	LID, HINGE	
215	A-7074-403-A	CK-093 BOARD, COMPLETE	
216	X-3950-596-1	CABINET (R) (D) ASSY	
* 217	3-060-640-01	COVER, ZEBRA KNOB	
218	3-060-644-11	KNOB, ZEBRA	

Ref. No.	Part No.	Description	Remarks
219	3-060-636-11	BUTTON, R	
220	3-060-637-11	GRILLE, SPEAKER	
221	3-060-639-11	SHEET, PROTECTION	
222	3-052-521-01	CUSHION (2), PANEL	
223	3-989-735-01	SCREW (M1.7), LOCK ACE, P2	
224	3-060-630-11	BASE, PANEL LOCK	
225	3-060-641-01	PAD, PANEL (POP) UP	
226	3-060-632-11	UP, PANEL (POP)	
227	3-060-633-01	SPRING, COMPRESSION	
228	3-060-638-01	KNOB, PANEL LOCK	
229	3-060-643-11	CLAW, PANEL LOCK	
230	3-060-634-01	SPRING, PANEL LOCK	
231	3-060-635-01	SHAFT, PANEL LOCK	
232	3-060-642-01	BUTTON, MENU	
* 233	3-060-691-01	BRACKET, MENU BUTTON	
234	1-678-061-21	FP-194 FLEXIBLE BOARD	
* 235	3-060-631-01	BRACKET, PANEL LOCK	

6-1-6. UPPER HANDLE SECTION

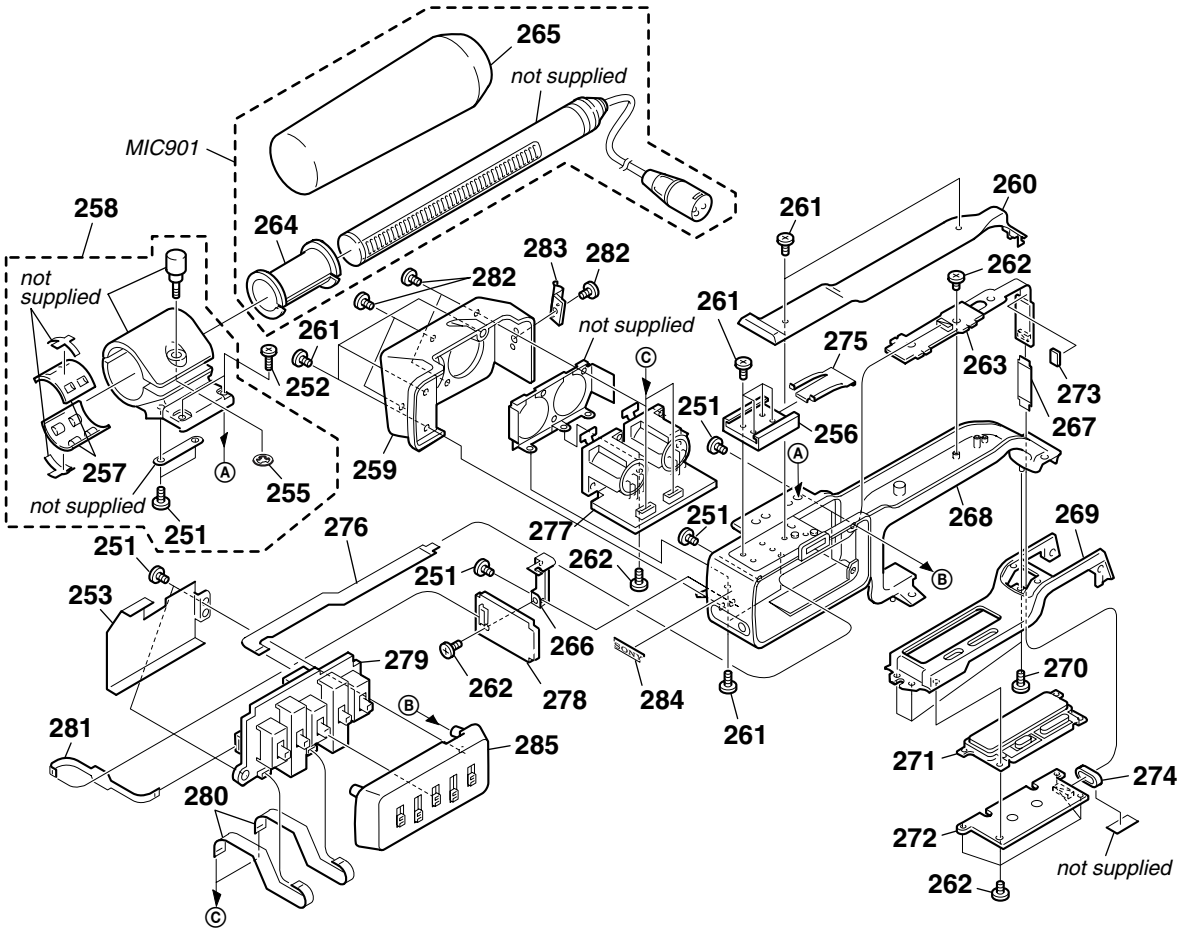

Ref. No.	Part No.	Description	Remarks
251	3-948-339-61	TAPPING	
252	7-682-549-09	SCREW +B 3X10	
253	3-060-814-01	INSULATED PLATE, SW	
255	3-165-904-01	WASHER, SCREW STOPPER	
256	3-688-755-11	SHOE, ACCESSORY	
257	3-608-303-01	RUBBER	
258	X-3950-604-1	HOLDER ASSY, MICROPHONE	
259	3-060-813-01	CABINET (R), HANDLE	
260	X-3950-602-1	COVER (D) ASSY, HANDLE	
261	3-053-121-41	BOLT (M2), SPRING	
262	3-053-121-11	BOLT (M2), SPRING	
263	A-7074-471-A	MA-386D BOARD, COMPLETE	
* 264	3-179-882-01	SPACER, MICROPHONE	
265	3-048-481-01	SCREEN, WINDOW	
* 266	3-060-815-01	BRACKET, DD	
267	1-678-049-11	FP-202 FLEXIBLE BOARD	
268	X-3950-601-1	HANDLE (D) ASSY	
269	3-060-786-11	CABINET (UPPER)	

Ref. No.	Part No.	Description	Remarks
270	3-053-121-21	BOLT (M2), SPRING	
271	X-3950-600-1	FRAME (D) ASSY, FK	
272	A-7074-412-A	FK-076 BOARD, COMPLETE	
* 273	3-062-543-01	CUSHION, MA FLEXIBLE	
274	1-469-829-11	CORE, FERRITE (US)	
275	3-688-754-11	SPRING	
276	1-678-051-11	FP-216 FLEXIBLE BOARD	
277	A-7074-470-A	XM-001 BOARD, COMPLETE	
278	A-7074-469-A	XD-001 BOARD, COMPLETE	
279	A-7074-468-A	XS-001 BOARD, COMPLETE	
280	1-678-052-11	FP-217 FLEXIBLE BOARD	
281	1-678-053-11	FP-218 FLEXIBLE BOARD	
282	3-061-062-01	BOLT (M2.6)	
* 283	3-678-684-01	HOLDER, CABLE	
284	3-969-037-02	EMBLEM (NO.3), SONY	
285	X-3950-603-1	CABINET (L) ASSY, HANDLE	
MIC901	8-814-298-90	ECM-NV1	

6-1-7. BATTERY PANEL SECTION

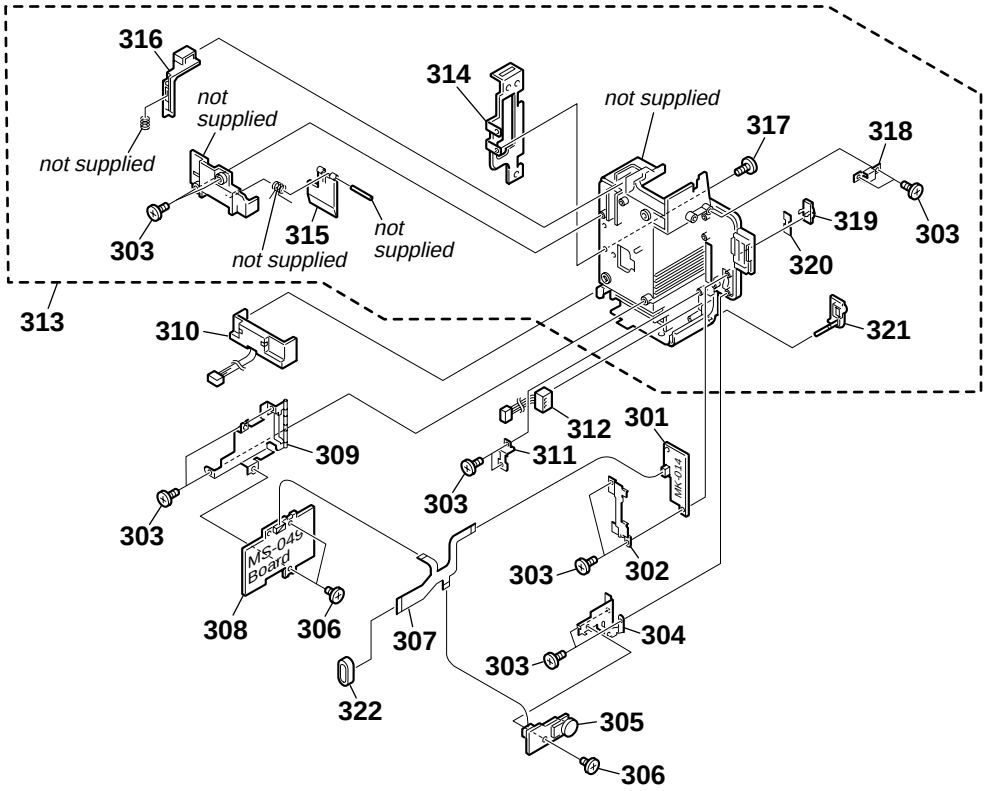

Ref. No.	Part No.	Description	Remarks
301	A-7074-408-A	MK-014 BOARD, COMPLETE	
* 302	3-060-678-01	RETAINER, MK	
303	3-948-339-61	TAPPING	
* 304	3-060-679-01	HOLDER, KP	
305	A-7074-406-A	KP-010 BOARD, COMPLETE	
306	3-053-121-11	BOLT (M2), SPRING	
307	1-678-058-11	FP-190 FLEXIBLE BOARD	
308	A-7074-407-A	MS-049 BOARD, COMPLETE	
309	X-3950-589-1	HOLDER ASSY, MS	
310	1-694-411-11	TERMINAL BOARD, BATTERY	
* 311	3-060-680-01	RETAINER, DC JACK	

Ref. No.	Part No.	Description	Remarks
312	1-794-637-11	CONNECTOR, DC-IN	
313	X-3950-593-1	PANEL (D) ASSY, BATTERY	
314	3-060-592-01	BRACKET (R), S BELT	
315	3-060-595-01	CLAW, BT LOCK	
316	3-060-594-11	LEVER, BT RELEASE	
317	3-053-121-41	BOLT (M2), SPRING	
* 318	3-060-774-01	JOINT, BT-R	
319	3-060-598-01	BUTTON, AL	
320	3-060-776-01	SHEET, AL	
321	3-060-773-01	COVER, DC JACK	
322	1-469-829-11	CORE, FERRITE (US)	

6-1-8. EVF SECTION

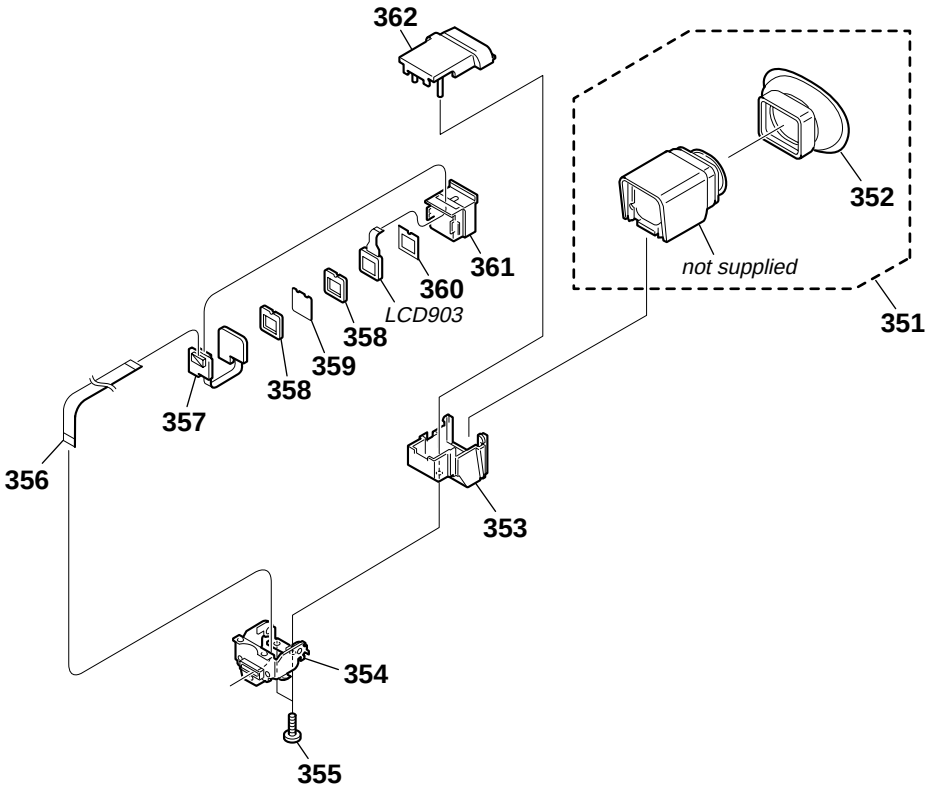

Ref. No.	Part No.	Description	Remarks
351	X-3950-563-1	CABINET ASSY, EVF REAR	
352	3-060-573-01	CUP, EYE	
353	X-3950-564-1	CABINET (LOWER) ASSY, EVF FRONT	
354	X-3950-565-1	HINGE ASSY, VF	
355	3-713-791-21	SCREW (M1.7X8), TAPPING, P2	
356	1-678-060-11	FP-193 FLEXIBLE BOARD	
357	A-7074-467-A	LB-065D BOARD, COMPLETE	
358	3-060-702-01	CUSHION (498), LCD	
359	3-060-701-01	ILLUMINATOR (498)	
360	3-060-788-01	SHEET, LIGHT INTERCEPTION	
361	X-3950-584-1	HOLDER ASSY, LCD	
362	3-060-674-01	CABINET (UPPER), EVF FRONT	
LCD903	8-753-026-79	LCX033AL-J	

6-1-9. CENTER FRAME SECTION

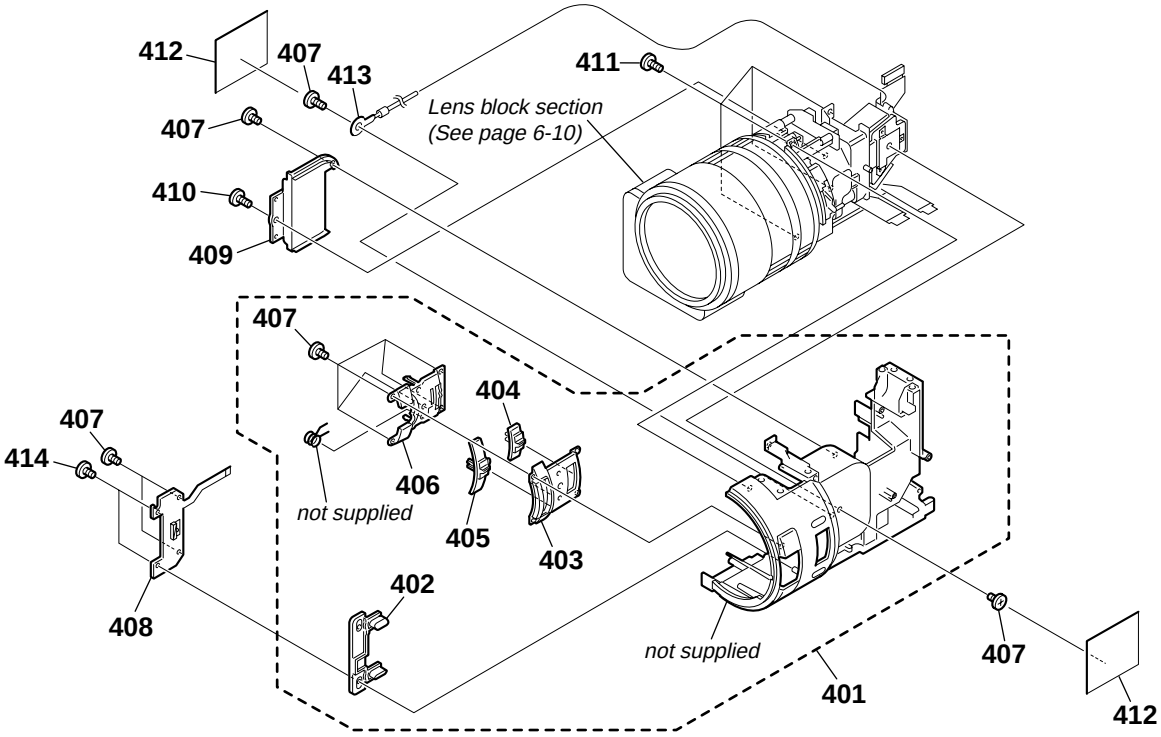

Ref. No.	Part No.	Description	Remarks	Ref. No.	Part No.	Description	Remarks
401	X-3950-594-1	FRAME (D) ASSY, CENTER		408	1-678-056-21	FP-188 FLEXIBLE BOARD	
402	3-060-620-01	BUTTON, IP		409	3-060-685-01	COVER, CCD	
403	3-060-621-11	ESCUTCHEON		410	3-948-339-61	TAPPING	
404	3-060-622-01	KNOB, MF		411	3-053-121-21	BOLT (M2), SPRING	
405	3-060-619-01	KNOB, ND		412	3-060-795-01	TAPE, HARNESS FIXED	
406	3-060-623-01	COVER, BUTTON		413	1-960-654-11	HARNESS, CJ-064	
407	3-053-121-11	BOLT (M2), SPRING		414	3-968-729-91	SCREW(M2), LOCK ACE, P2	

6-1-10. LENS BLOCK SECTION

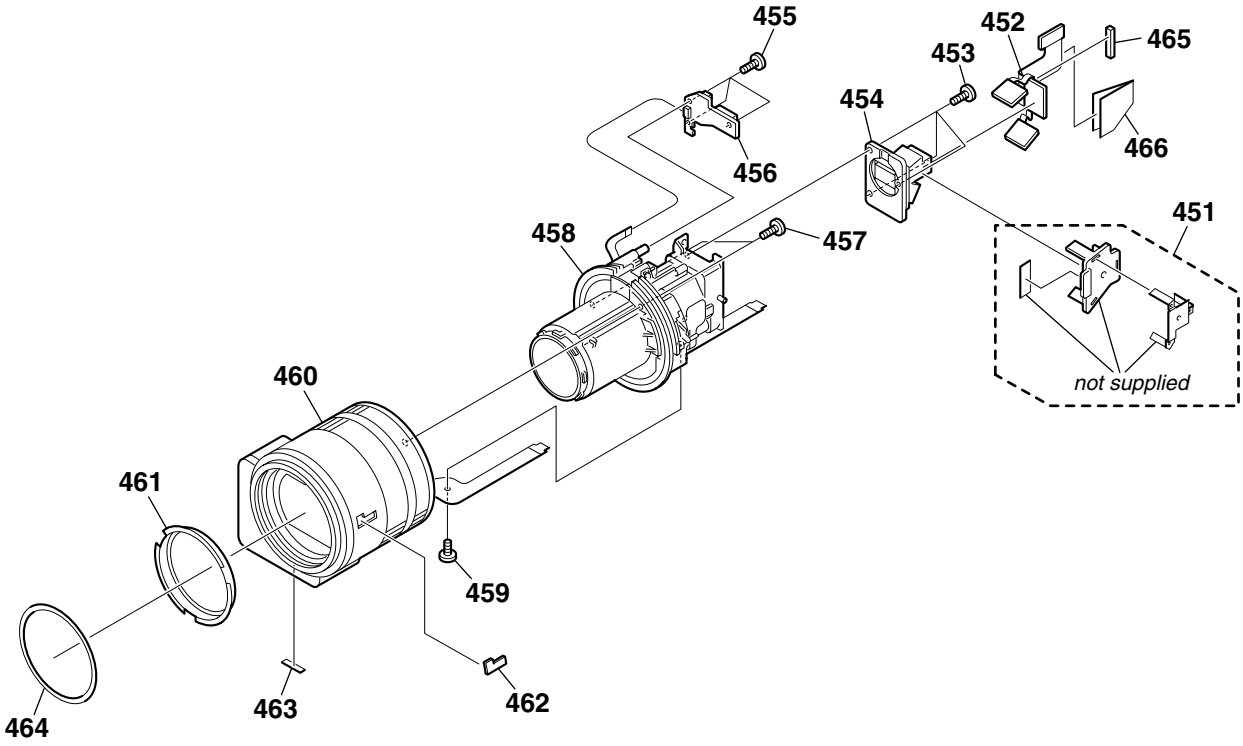

Be sure to read “Precautions upon replacing CCD imager” on page 4-9 when changing the CCD imager.

Ref. No.	Part No.	Description	Remarks
451	X-3950-586-1	COVER ASSY, PRISM	
452	A-7074-398-A	CD-254 BOARD, COMPLETE	
453	3-713-791-61	SCREW (M1.7X7), TAPPING, P2	
454	A-7031-100-A	PRISM ASSY (SERVICE)(INCLUDE 3CCD)(US)	
454	A-7031-101-A	PRISM ASSY (SERVICE)(INCLUDE 3CCD)(AEP)	
455	3-948-339-61	TAPPING	
456	A-7074-399-A	SE-108 BOARD, COMPLETE	
457	3-948-339-31	SCREW, TAPPING P2	
458	3-709-596-01	LENS ASSY, ZOOM	
459	3-713-791-91	SCREW (M1.7)	
460	3-709-595-12	VAP ASSY (B114B)	
461	3-709-594-01	RING ASSY, ORNAMENTAL	
462	3-963-933-01	EMBLEM, CCD	
463	3-062-454-01	FOOT (A), RUBBER	
464	3-060-681-01	RING, NAME	
* 465	3-053-354-01	CUSHION, CD FLEXIBLE	
* 466	3-062-778-01	SHEET (CD)	

6-1-11. CASSETTE COMPARTMENT, DRUM AND REEL TABLE ASSEMBLY

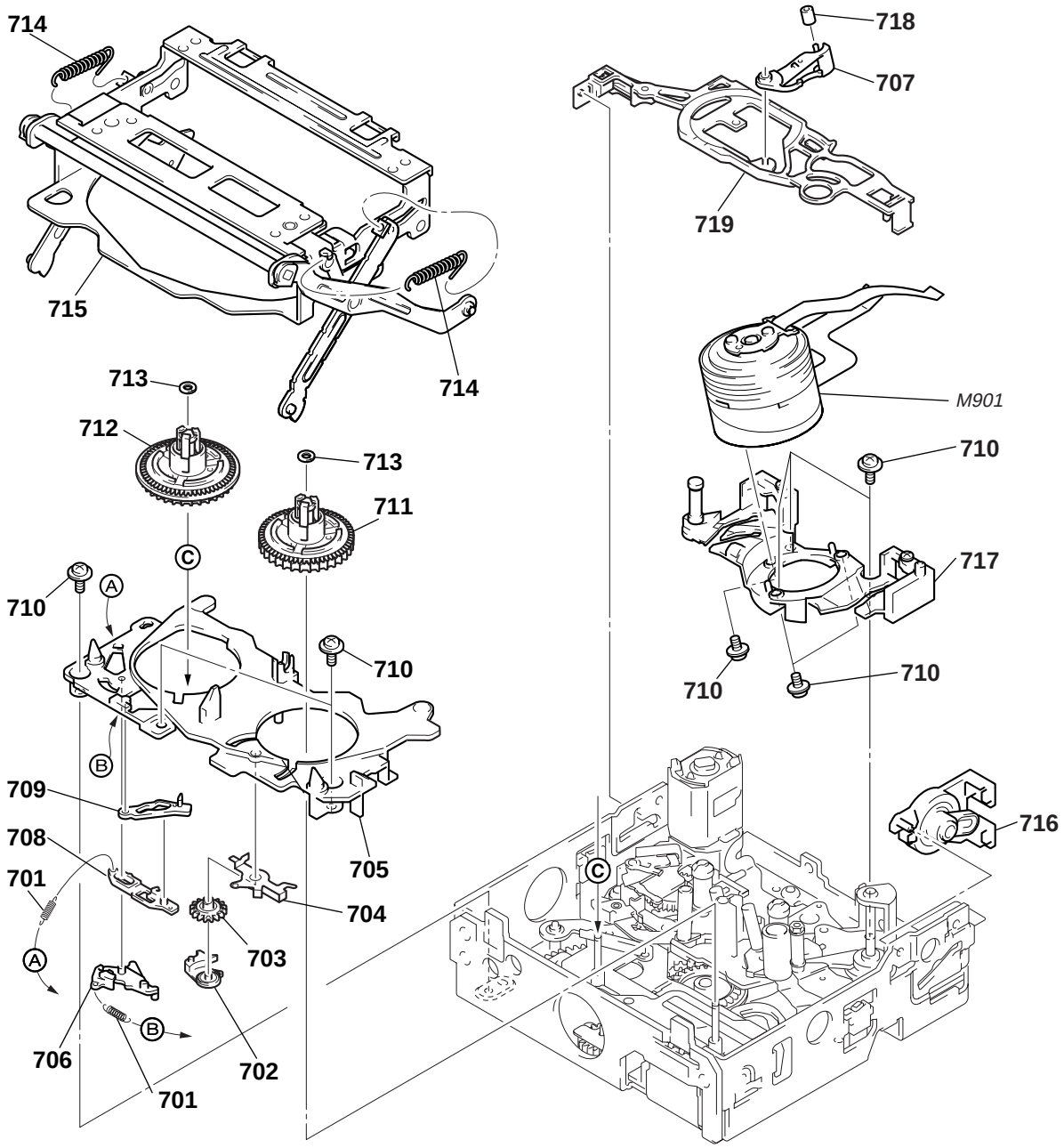

Ref. No.	Part No.	Description	Remarks
701	3-988-312-01	SPRING, EXTENSION	
702	3-988-220-01	BRAKE (T)	
703	3-988-221-01	GEAR (T), BRAKE	
704	3-988-222-01	SPRING (T), BRAKE	
705	3-988-215-02	BASE, CASSETTE	
706	3-988-217-01	ARM (S), RESET	
707	3-988-281-02	ARM, HC	
708	3-988-219-01	RACK (S), BRAKE	
709	3-988-218-01	BRAKE (S)	
710	3-947-503-01	SCREW (M1.4)	

Ref. No.	Part No.	Description	Remarks
711	X-3948-445-1	TABLE (T) ASSY, REEL	
712	X-3948-444-1	TABLE (S) ASSY, REEL	
713	3-989-465-01	WASHER, STOPPER	
714	3-988-298-01	SPRING EXTENSION	
715	X-3948-441-9	CASSETTE COMPARTMENT ASSY	
716	X-3948-443-2	DAMPER ASSY	
717	A-7093-612-A	DRUM BASE BLOCK ASSY	
718	3-988-282-01	ROLLER, HC	
719	3-988-283-01	STOPPER, TAPE FALL	
M901	A-4900-081-A	DRUM ASSY (DEH-14B/J-RP)	

6-1-12. TAPE GUIDE, PINCH SLIDER ASSEMBLY AND BRAKE SLIDER ASSEMBLY

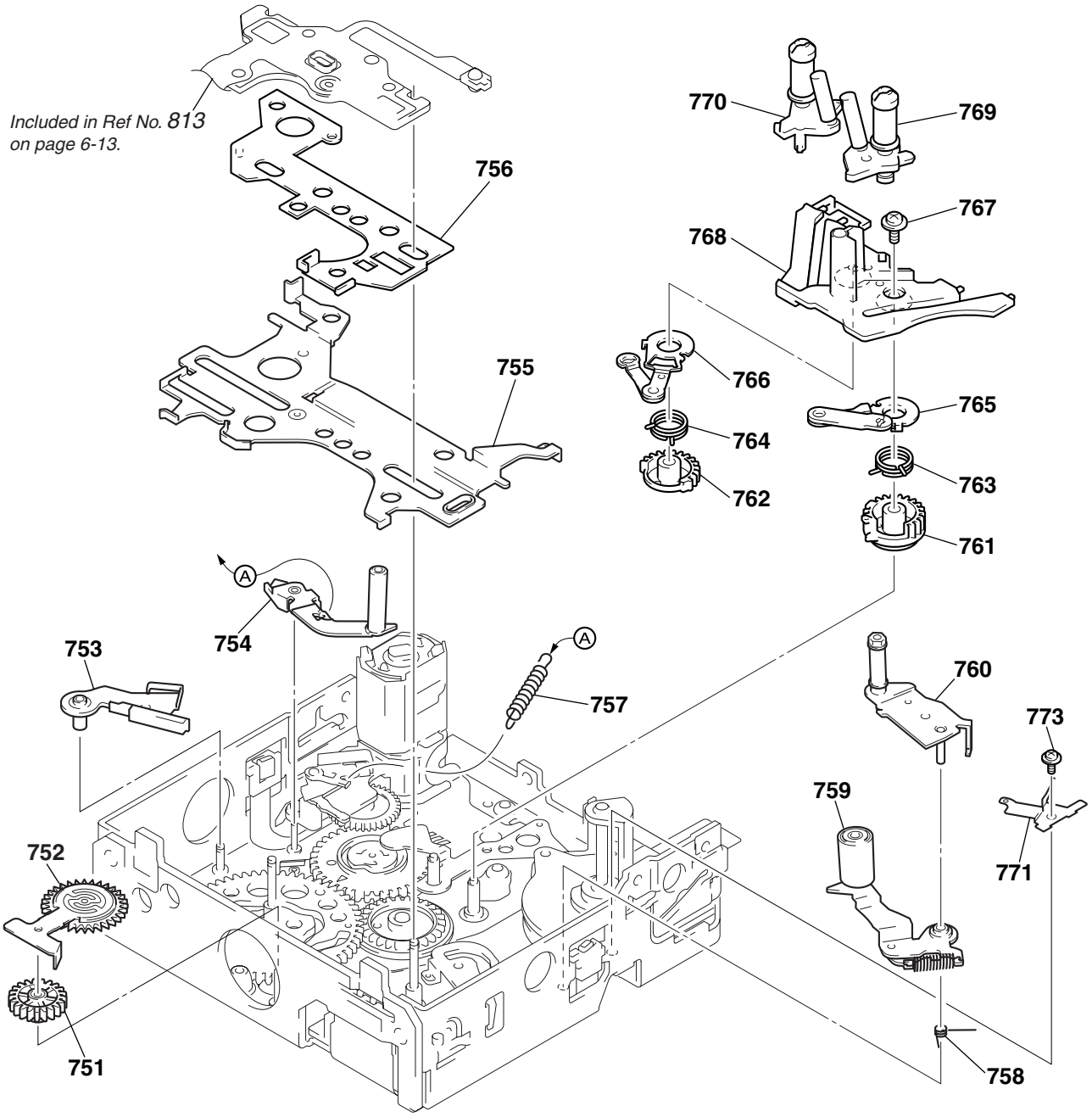

Ref. No.	Part No.	Description	Remarks
751	3-988-263-01	GEAR, RELAY	
752	X-3948-442-2	GEAR ASSY, GOOSENECK	
753	X-3948-435-2	PLATE ASSY, TG1 ADJUSTMENT	
754	X-3948-434-1	ARM ASSY, TG1	
755	X-3948-428-2	SLIDER ASSY, PINCH	
756	X-3948-766-1	SLIDER ASSY, BRAKE	
757	3-988-270-01	SPRING (TG1), TENSION COIL	
758	3-988-233-01	SPRING (TG7LD), TORSION	
759	X-3948-433-2	ARM ASSY, PINCH	
760	A-7093-501-A	ARM BLOCK ASSY, TG7	
761	3-988-257-01	GEAR (T), GL	

Ref. No.	Part No.	Description	Remarks
762	3-988-252-02	GEAR (S), GL	
763	3-988-258-01	SPRING (GLT), TORSION	
764	3-988-253-01	SPRING (GLS), TORSION	
765	X-3948-440-1	ARM (T) ASSY, GL	
766	X-3948-439-2	ARM (S) ASSY, GL	
767	3-947-503-01	SCREW (M1.4)	
768	3-988-242-01	RAIL, GUIDE	
769	X-3948-438-3	COASTER (T) ASSY	
770	X-3948-934-4	COASTER (S2) ASSY	
771	3-988-690-02	SPRING, TG7 RETAINER	
773	3-053-083-01	SCREW	

6-1-13. EACH GEARS AND LOADING/CAPSTAN MOTOR ASSEMBLY

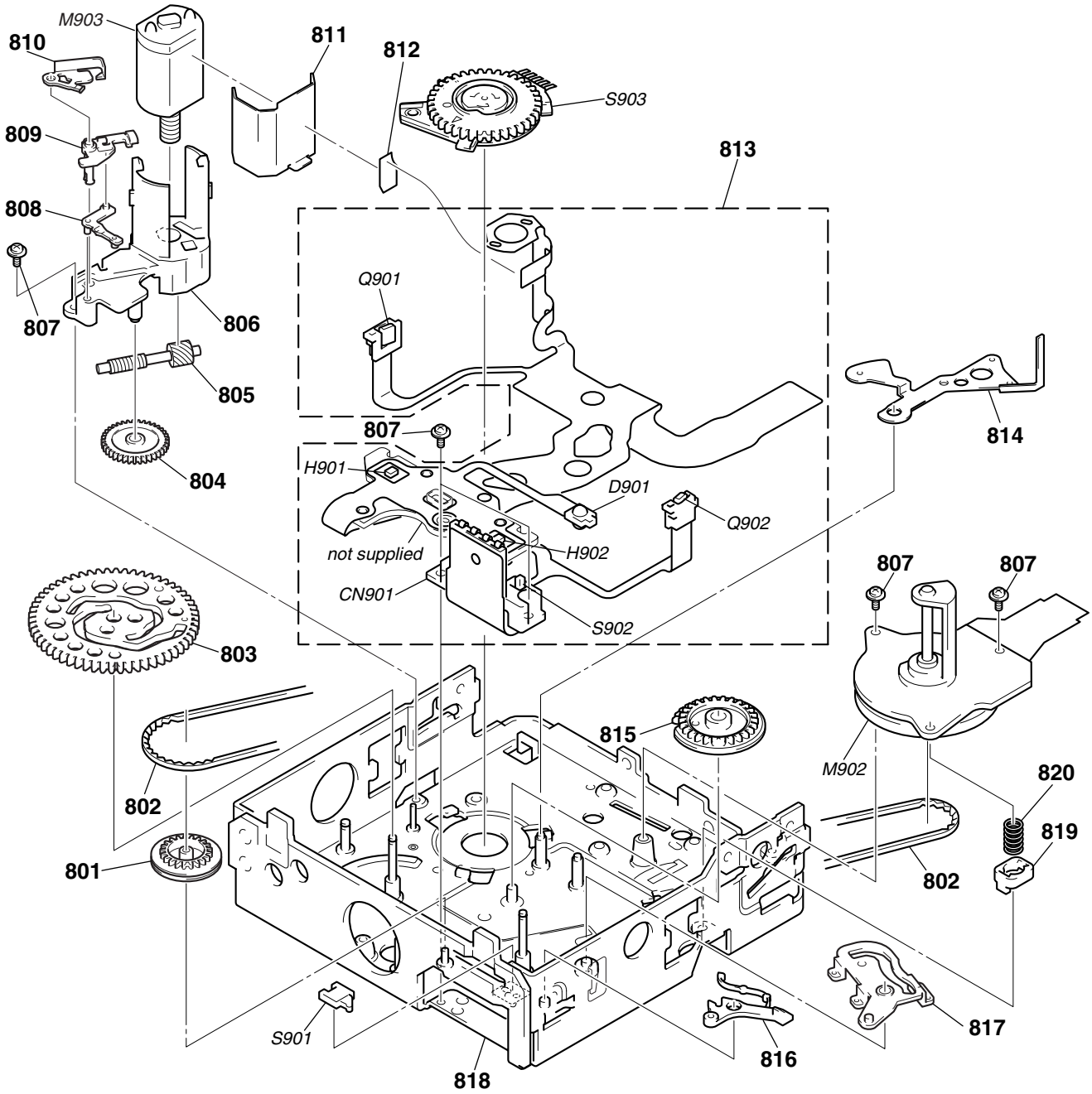

Ref. No.	Part No.	Description	Remarks
801	3-988-274-01	PULLEY, CONVERSION	
802	3-988-276-02	BELT, TIMING	
803	3-988-216-01	GEAR, CAM	
804	3-988-211-01	GEAR, DECELERATION	
805	3-988-210-01	SHAFT, WORM	
806	3-988-207-01	HOLDER, MOTOR	
807	3-947-503-01	SCREW (M1.4)	
808	3-988-303-01	ARM, SPRING HOOK DRIVING	
809	3-988-271-01	BASE, SPRING HOOK FULCRUM	
810	3-988-302-01	HOOK, TG1 SPRING	
811	3-988-208-01	SHIELD, MOTOR	
812	1-657-785-11	FP-248 FLEXIBLE BOARD (DEW SENSOR)	
813	A-7073-418-A	FP-594 FLEXIBLE BOARD, COMPLETE	
814	3-988-280-03	ARM, HC DRIVING	
815	3-988-239-01	GEAR, GL DRIVING	
816	3-988-223-01	ARM, EJECT	

Ref. No.	Part No.	Description	Remarks
817	3-988-224-01	ARM, PINCH PRESS	
818	X-3948-431-2	CHASSIS ASSY	
819	3-050-170-01	HOLDER	
820	3-051-787-02	SPRING (CAP), COMPRESSION COIL	
CN901	1-784-723-11	PIN, CONNECTOR 4P	
D901	8-719-067-13	DIODE GL453K	
H901	8-719-061-28	DIODE HW-105C-FT-V (S REEL)	
H902	8-719-061-28	DIODE HW-105C-FT-V (T REEL)	
M902	8-835-606-01	MOTOR, DC SCD15A/C-NP (CAPSTAN)	
M903	X-3948-346-1	MOTOR ASSY, LOADING	
Q901	8-729-907-25	PHOTO TRANSISTOR PT4850F (TAPE END)	
Q902	8-729-907-25	PHOTO TRANSISTOR PT4850F (TAPE TOP)	
S901	1-771-039-51	SWITCH, PUSH (CASSETTE IN)	
S902	1-572-719-32	SWITCH, PUSH (1 KEY) (REC PROOF)	
S903	1-771-325-11	ENCODER, ROTARY (SWITCH) (MODE)	

6-2. ELECTRICAL PARTS LIST

NOTE:

- Due to standardization, replacements in the parts list may be different from the parts specified in the diagrams or the components used on the set.
- -XX, -X mean standardized parts, so they may have some difference from the original one.
- Items marked "*" are not stocked since they are seldom required for routine service. Some delay should be anticipated when ordering these items.
- CAPACITORS:
  uF: µF
- COILS
  uH: µH
- RESISTORS
  All resistors are in ohms.
  METAL: metal-film resistor
  METAL OXIDE: Metal Oxide-film resistor
  F: nonflammable
- SEMICONDUCTORS
  In each case, u: µ, for example:
  uA...: µA... , uPA... , µPA... ,
  uPB... , µPB... , uPC... , µPC... ,
  uPD..., µPD...

When indicating parts by reference number, please include the board name.

The components identified by mark ⚠ or dotted line with mark ⚠ are critical for safety. Replace only with part number specified.

Les composants identifiés par une marque ⚠ sont critiques pour la sécurité. Ne les remplacer que par une pièce portant le numéro spécifié.

Ref. No.	Part No.	Description			Remarks
	A-7074-398-A	CD-254 BOARD, COMPLETE			
		**********			
		(Ref.No.;1000Series)			
		(IC100,101,102 are not included in this completed board)			
		< CAPACITOR >			
C100	1-107-826-91	CERAMIC CHIP	0.1uF	10%	16V
C101	1-107-826-91	CERAMIC CHIP	0.1uF	10%	16V
C102	1-119-751-11	TANTAL. CHIP	22uF	20%	16V
C103	1-119-751-11	TANTAL. CHIP	22uF	20%	16V
C104	1-127-760-91	CERAMIC CHIP	4.7uF	10%	6.3V
C105	1-127-760-91	CERAMIC CHIP	4.7uF	10%	6.3V
C108	1-117-919-11	TANTAL. CHIP	10uF	20%	6.3V
C109	1-107-686-11	TANTAL. CHIP	4.7uF	20%	16V
C110	1-127-760-91	CERAMIC CHIP	4.7uF	10%	6.3V
C111	1-125-777-11	CERAMIC CHIP	0.1uF	10%	10V
C112	1-107-686-11	TANTAL. CHIP	4.7uF	20%	16V
C113	1-117-919-11	TANTAL. CHIP	10uF	20%	6.3V
C114	1-107-686-11	TANTAL. CHIP	4.7uF	20%	16V
C115	1-117-919-11	TANTAL. CHIP	10uF	20%	6.3V
C117	1-125-777-11	CERAMIC CHIP	0.1uF	10%	10V
C118	1-125-777-11	CERAMIC CHIP	0.1uF	10%	10V
C119	1-119-751-11	TANTAL. CHIP	22uF	20%	16V
C120	1-107-826-91	CERAMIC CHIP	0.1uF	10%	16V
C130	1-107-826-91	CERAMIC CHIP	0.1uF	10%	16V
C131	1-162-966-11	CERAMIC CHIP	0.0022uF	10%	50V
C132	1-107-826-91	CERAMIC CHIP	0.1uF	10%	16V
C133	1-162-966-11	CERAMIC CHIP	0.0022uF	10%	50V
C134	1-162-966-11	CERAMIC CHIP	0.0022uF	10%	50V
C135	1-107-826-91	CERAMIC CHIP	0.1uF	10%	16V
		< CONNECTOR >			
CN100	1-778-078-21	CONNECTOR, BOARD TO BOARD 50P			
		< IC >			
IC103	8-759-561-46	IC AD8014ART-REEL7			
IC104	8-759-561-46	IC AD8014ART-REEL7			
IC105	8-759-561-46	IC AD8014ART-REEL7			
		< COIL >			
L100	1-412-963-11	INDUCTOR	100uH		
L101	1-412-963-11	INDUCTOR	100uH		
L104	1-412-963-11	INDUCTOR	100uH		
L105	1-412-963-11	INDUCTOR	100uH		
L106	1-412-963-11	INDUCTOR	100uH		
L107	1-412-963-11	INDUCTOR	100uH		

Ref. No.	Part No.	Description			Remarks
		< RESISTOR >			
R100	1-218-962-11	RES-CHIP	5.6K	5%	1/16W
R101	1-218-961-11	RES-CHIP	4.7K	5%	1/16W
R102	1-218-962-11	RES-CHIP	5.6K	5%	1/16W
R103	1-218-961-11	RES-CHIP	4.7K	5%	1/16W
R104	1-218-961-11	RES-CHIP	4.7K	5%	1/16W
R105	1-218-962-11	RES-CHIP	5.6K	5%	1/16W
R106	1-218-953-11	RES-CHIP	1K	5%	1/16W
R107	1-218-940-11	RES-CHIP	82	5%	1/16W
R108	1-218-953-11	RES-CHIP	1K	5%	1/16W
R109	1-218-940-11	RES-CHIP	82	5%	1/16W
R110	1-218-953-11	RES-CHIP	1K	5%	1/16W
R111	1-218-940-11	RES-CHIP	82	5%	1/16W
R112	1-220-210-11	RES-CHIP	200K	5%	1/16W
R113	1-220-210-11	RES-CHIP	200K	5%	1/16W
R114	1-220-210-11	RES-CHIP	200K	5%	1/16W
	A-7074-403-A	CK-093 BOARD, COMPLETE			
		**********			
		(Ref.No.;1000Series)			
	3-051-919-01	SHEET,LI PROTECTION			
		< BATTERY >			
BT250	1-528-724-21	BATTERY, V/L RICHARGEABL			
		< CONNECTOR >			
CN250	1-784-995-21	CONNECTOR, BOARD TO BOARD 50P			
CN251	1-794-378-21	PIN, CONNECTOR 14P			
CN252	1-794-377-21	PIN, CONNECTOR 8P			
CN253	1-794-057-21	PIN, CONNECTOR (PC BOARD) 2P			
CN254	1-766-335-21	CONNECTOR, FFC/FPC 5P			
CN255	1-779-327-11	CONNECTOR, FFC/FPC 6P			
CN256	1-779-327-11	CONNECTOR, FFC/FPC 6P			
		< DIODE >			
D250	8-719-064-61	DIODE 01BZA8.2(TE85L)			
D251	8-719-064-61	DIODE 01BZA8.2(TE85L)			
D252	8-719-073-03	DIODE MA8082-(K8).S0			
D253	8-719-064-61	DIODE 01BZA8.2(TE85L)			
D254	8-719-064-61	DIODE 01BZA8.2(TE85L)			
D255	8-719-064-61	DIODE 01BZA8.2(TE85L)			

Be sure to read "Precautions upon replacing CCD imager" on page 4-9 when changing the CCD imager.

Ref. No.	Part No.	Description			Remarks
		< RESISTOR >			
R255	1-218-954-11	RES-CHIP	1.2K	5%	1/16W
R256	1-218-954-11	RES-CHIP	1.2K	5%	1/16W
R257	1-218-954-11	RES-CHIP	1.2K	5%	1/16W
R258	1-218-955-11	RES-CHIP	1.5K	5%	1/16W
R259	1-218-955-11	RES-CHIP	1.5K	5%	1/16W
R260	1-218-955-11	RES-CHIP	1.5K	5%	1/16W
R261	1-218-959-11	RES-CHIP	3.3K	5%	1/16W
R262	1-218-959-11	RES-CHIP	3.3K	5%	1/16W
R263	1-218-959-11	RES-CHIP	3.3K	5%	1/16W
R264	1-218-963-11	RES-CHIP	6.8K	5%	1/16W
R265	1-218-963-11	RES-CHIP	6.8K	5%	1/16W
R266	1-218-963-11	RES-CHIP	6.8K	5%	1/16W
R267	1-218-969-11	RES-CHIP	22K	5%	1/16W
R268	1-218-969-11	RES-CHIP	22K	5%	1/16W
R269	1-218-969-11	RES-CHIP	22K	5%	1/16W
		< SWITCH >			
S250	1-771-138-61	SWITCH, KEY BOARD(TITLE)			
S251	1-771-138-61	SWITCH, KEY BOARD(DISPLAY)			
S252	1-771-138-61	SWITCH, KEY BOARD(MEMORY INDEX)			
S253	1-771-138-61	SWITCH, KEY BOARD(TC/U-BIT)			
S254	1-771-138-61	SWITCH, KEY BOARD(MEMORY +)			
S255	1-771-138-61	SWITCH, KEY BOARD(DIGITAL EFFECT)			
S256	1-771-138-61	SWITCH, KEY BOARD(RESET)			
S257	1-771-138-61	SWITCH, KEY BOARD(MEMORY -)			
S258	1-771-138-61	SWITCH, KEY BOARD(MENU)			
S259	1-771-138-61	SWITCH, KEY BOARD(MEMORY DELETE)			
S260	1-771-138-61	SWITCH, KEY BOARD(MEMORY MIX)			
S261	1-771-138-61	SWITCH, KEY BOARD(DATA CODE)			
S262	1-771-138-61	SWITCH, KEY BOARD(MEMORY PLAY)			
S263	1-762-648-21	SWITCH, SLIDE(ZEBRA/OFF/70/100)			

A-7074-466-A DD-138D BOARD, COMPLETE
****
(Ref.No.;1000Series)

Ref. No.	Part No.	Description			Remarks
		< CAPACITOR >			
C300	1-107-819-11	CERAMIC CHIP	0.022uF	10%	16V
C301	1-125-777-11	CERAMIC CHIP	0.1uF	10%	10V
C302	1-119-923-81	CERAMIC CHIP	0.047uF	10%	10V
C303	1-119-923-81	CERAMIC CHIP	0.047uF	10%	10V
C304	1-164-939-11	CERAMIC CHIP	0.0022uF	10%	16V
C305	1-164-943-11	CERAMIC CHIP	0.01uF	10%	16V
C307	1-125-777-11	CERAMIC CHIP	0.1uF	10%	10V
C308	1-119-751-11	TANTAL. CHIP	22uF	20%	16V
C309	1-164-874-11	CERAMIC CHIP	100PF	5%	16V
C310	1-119-751-11	TANTAL. CHIP	22uF	20%	16V
C311	1-164-935-11	CERAMIC CHIP	470PF	10%	16V
C312	1-119-923-81	CERAMIC CHIP	0.047uF	10%	10V
C313	1-104-913-11	TANTAL. CHIP	10uF	20%	16V
C314	1-119-751-11	TANTAL. CHIP	22uF	20%	16V
C315	1-164-937-11	CERAMIC CHIP	0.001uF	10%	16V
C316	1-119-751-11	TANTAL. CHIP	22uF	20%	16V
C317	1-164-939-11	CERAMIC CHIP	0.0022uF	10%	16V
C318	1-164-935-11	CERAMIC CHIP	470PF	10%	16V
C319	1-164-937-11	CERAMIC CHIP	0.001uF	10%	16V
C320	1-164-933-11	CERAMIC CHIP	220PF	10%	16V
C321	1-164-874-11	CERAMIC CHIP	100PF	5%	16V
C322	1-109-982-11	CERAMIC CHIP	1uF	10%	10V
C323	1-127-760-91	CERAMIC CHIP	4.7uF	10%	6.3V
C324	1-127-760-91	CERAMIC CHIP	4.7uF	10%	6.3V
C325	1-164-940-11	CERAMIC CHIP	0.0033uF	10%	16V
C326	1-109-982-11	CERAMIC CHIP	1uF	10%	10V
C327	1-164-939-11	CERAMIC CHIP	0.0022uF	10%	16V
C328	1-164-940-11	CERAMIC CHIP	0.0033uF	10%	16V
C329	1-164-940-11	CERAMIC CHIP	0.0033uF	10%	16V
C330	1-164-940-11	CERAMIC CHIP	0.0033uF	10%	16V
C331	1-164-940-11	CERAMIC CHIP	0.0033uF	10%	16V
C332	1-164-940-11	CERAMIC CHIP	0.0033uF	10%	16V
C333	1-115-566-11	CERAMIC CHIP	4.7uF	10%	10V
C334	1-115-566-11	CERAMIC CHIP	4.7uF	10%	10V
C335	1-115-566-11	CERAMIC CHIP	4.7uF	10%	10V
C336	1-115-566-11	CERAMIC CHIP	4.7uF	10%	10V
C337	1-115-566-11	CERAMIC CHIP	4.7uF	10%	10V
C338	1-125-777-11	CERAMIC CHIP	0.1uF	10%	10V
C339	1-104-851-11	TANTAL. CHIP	10uF	20%	10V
C340	1-127-760-91	CERAMIC CHIP	4.7uF	10%	6.3V
C341	1-127-760-91	CERAMIC CHIP	4.7uF	10%	6.3V
C342	1-127-760-91	CERAMIC CHIP	4.7uF	10%	6.3V
C343	1-127-760-91	CERAMIC CHIP	4.7uF	10%	6.3V
C344	1-127-760-91	CERAMIC CHIP	4.7uF	10%	6.3V
C345	1-127-760-91	CERAMIC CHIP	4.7uF	10%	6.3V
C346	1-127-820-91	CERAMIC	4.7uF		16V
C347	1-164-505-11	CERAMIC CHIP	2.2uF		16V
C349	1-127-820-91	CERAMIC	4.7uF		16V
C350	1-113-985-11	TANTAL. CHIP	10uF	20%	20V
C351	1-117-919-11	TANTAL. CHIP	10uF	20%	6.3V
C352	1-117-919-11	TANTAL. CHIP	10uF	20%	6.3V
C353	1-104-851-11	TANTAL. CHIP	10uF	20%	10V
C354	1-104-852-11	TANTAL. CHIP	22uF	20%	6.3V
C355	1-104-851-11	TANTAL. CHIP	10uF	20%	10V
C356	1-117-919-11	TANTAL. CHIP	10uF	20%	6.3V
C357	1-117-919-11	TANTAL. CHIP	10uF	20%	6.3V
C358	1-117-919-11	TANTAL. CHIP	10uF	20%	6.3V
C359	1-135-259-11	TANTAL. CHIP	10uF	20%	6.3V
C360	1-104-851-11	TANTAL. CHIP	10uF	20%	10V
C361	1-110-569-11	TANTAL. CHIP	47uF	20%	6.3V
C362	1-109-982-11	CERAMIC CHIP	1uF	10%	10V
C363	1-104-851-11	TANTAL. CHIP	10uF	20%	10V
C364	1-135-214-21	TANTAL. CHIP	4.7uF	20%	20V
C365	1-135-214-21	TANTAL. CHIP	4.7uF	20%	20V
C366	1-113-985-11	TANTAL. CHIP	10uF	20%	20V
C367	1-125-777-11	CERAMIC CHIP	0.1uF	10%	10V
C368	1-135-259-11	TANTAL. CHIP	10uF	20%	6.3V
C369	1-164-505-11	CERAMIC CHIP	2.2uF		16V
C370	1-164-505-11	CERAMIC CHIP	2.2uF		16V
C371	1-113-985-11	TANTAL. CHIP	10uF	20%	20V
C372	1-113-985-11	TANTAL. CHIP	10uF	20%	20V
C373	1-104-851-11	TANTAL. CHIP	10uF	20%	10V
C375	1-113-985-11	TANTAL. CHIP	10uF	20%	20V
C376	1-135-212-21	TANTAL. CHIP	2.2uF	20%	35V
C450	1-115-566-11	CERAMIC CHIP	4.7uF	10%	10V

Ref. No.	Part No.	Description	Remarks
		< CONNECTOR >	
CN300	1-573-290-21	PIN, CONNECTOR (1.5MM) (SMD)4P	
CN301	1-691-550-11	PIN, CONNECTOR (1.5MM)(SMD) 3P	
CN450	1-778-084-11	CONNECTOR, BOARD TO BOARD 60P	
		< DIODE >	
D300	8-719-158-49	DIODE MA8120-TX	
D301	8-719-073-03	DIODE MA8082-(K8).S0	
D302	8-719-073-03	DIODE MA8082-(K8).S0	
D303	8-719-073-03	DIODE MA8082-(K8).S0	
D304	8-719-056-48	DIODE 1SS388(TPL3)	
D305	8-719-058-24	DIODE RB501V-40TE-17	
D306	8-719-058-24	DIODE RB501V-40TE-17	
D307	8-719-058-24	DIODE RB501V-40TE-17	
D308	8-719-056-48	DIODE 1SS388(TPL3)	
D309	8-719-056-48	DIODE 1SS388(TPL3)	
D311	8-719-056-48	DIODE 1SS388(TPL3)	
D312	8-719-056-48	DIODE 1SS388(TPL3)	
D313	8-719-056-48	DIODE 1SS388(TPL3)	
D314	8-719-056-23	DIODE MA2S111-(K8).SO	
D315	8-719-075-12	DIODE MA3XD21001S0	
D316	8-719-056-23	DIODE MA2S111-(K8).SO	
		< FUSE >	
⚠F300	1-576-286-21	FUSE, MICRO(1.4A)	
⚠F301	1-576-286-21	FUSE, MICRO(1.4A)	
⚠F302	1-576-286-21	FUSE, MICRO(1.4A)	
⚠F303	1-576-286-21	FUSE, MICRO(1.4A)	
⚠F304	1-576-286-21	FUSE, MICRO(1.4A)	
⚠F305	1-576-286-21	FUSE, MICRO(1.4A)	
		< IC >	
IC300	8-759-491-09	IC MB4488PFV-G-BND-ER	
IC301	8-759-075-66	IC TA75S01F(TE85R)	
		< COIL >	
L300	1-416-669-11	INDUCTOR 22uH	
L301	1-416-670-11	INDUCTOR 33uH	
L302	1-416-669-11	INDUCTOR 22uH	
L303	1-416-669-11	INDUCTOR 22uH	
L304	1-416-669-11	INDUCTOR 22uH	
L305	1-416-669-11	INDUCTOR 22uH	
L306	1-412-056-11	INDUCTOR 4.7uH	
L307	1-414-770-91	INDUCTOR CHIP 4.7uH	
L308	1-412-056-11	INDUCTOR 4.7uH	
L309	1-414-400-11	INDUCTOR 22uH	
L310	1-414-770-91	INDUCTOR CHIP 4.7uH	
L311	1-414-770-91	INDUCTOR CHIP 4.7uH	
L312	1-412-056-11	INDUCTOR 4.7uH	
L313	1-414-770-91	INDUCTOR CHIP 4.7uH	
L314	1-414-770-91	INDUCTOR CHIP 4.7uH	
L315	1-414-394-11	INDUCTOR 2.2uH	
L316	1-414-770-91	INDUCTOR CHIP 4.7uH	
L317	1-469-058-11	INDUCTOR CHIP 22uH	
L318	1-469-058-11	INDUCTOR CHIP 22uH	
L319	1-414-770-91	INDUCTOR CHIP 4.7uH	
L451	1-414-770-91	INDUCTOR CHIP 4.7uH	

Ref. No.	Part No.	Description	Remarks
		< TRANSISTOR >	
Q300	8-729-047-68	TRANSISTOR SSM3K03FE(TPL3)	
Q301	8-729-046-77	TRANSISTOR SI4963DY-T1	
Q302	8-729-804-41	TRANSISTOR 2SB1122-ST-TD	
Q303	8-729-037-74	TRANSISTOR UN9213J-(K8).SO	
Q304	8-729-047-68	TRANSISTOR SSM3K03FE(TPL3)	
Q305	8-729-050-24	TRANSISTOR MCH6202-TL	
Q306	8-729-037-53	TRANSISTOR 2SB1462J-QR(K8).SO	
Q307	8-729-037-74	TRANSISTOR UN9213J-(K8).SO	
Q308	8-729-043-60	TRANSISTOR CPH6102-TL	
Q309	8-729-046-98	TRANSISTOR CPH6702-TL	
Q310	8-729-046-98	TRANSISTOR CPH6702-TL	
Q311	8-729-046-98	TRANSISTOR CPH6702-TL	
Q312	8-729-046-98	TRANSISTOR CPH6702-TL	
Q313	8-729-046-98	TRANSISTOR CPH6702-TL	
Q314	8-729-046-98	TRANSISTOR CPH6702-TL	
Q315	8-729-037-52	TRANSISTOR 2SD2216J-QR(K8).SO	
Q316	8-729-017-61	TRANSISTOR 2SB1581-T1	
Q317	8-729-037-53	TRANSISTOR 2SB1462J-QR(K8).SO	
Q318	8-729-044-58	TRANSISTOR SI2304DS-T1	
Q319	8-729-044-58	TRANSISTOR SI2304DS-T1	
Q320	8-729-044-58	TRANSISTOR SI2304DS-T1	
Q321	8-729-044-58	TRANSISTOR SI2304DS-T1	
Q322	8-729-044-58	TRANSISTOR SI2304DS-T1	
Q323	8-729-044-58	TRANSISTOR SI2304DS-T1	
Q324	8-729-037-52	TRANSISTOR 2SD2216J-QR(K8).SO	
Q325	8-729-037-74	TRANSISTOR UN9213J-(K8).SO	
Q326	8-729-037-52	TRANSISTOR 2SD2216J-QR(K8).SO	
Q327	8-729-037-52	TRANSISTOR 2SD2216J-QR(K8).SO	
Q328	8-729-037-53	TRANSISTOR 2SB1462J-QR(K8).SO	
Q329	8-729-037-74	TRANSISTOR UN9213J-(K8).SO	
Q331	8-729-037-53	TRANSISTOR 2SB1462J-QR(K8).SO	
Q332	8-729-037-53	TRANSISTOR 2SB1462J-QR(K8).SO	
Q333	8-729-037-53	TRANSISTOR 2SB1462J-QR(K8).SO	
Q334	8-729-049-25	TRANSISTOR 2SC5376F-B(TPL3)	
Q335	8-729-037-52	TRANSISTOR 2SD2216J-QR(K8).SO	
Q336	8-729-037-52	TRANSISTOR 2SD2216J-QR(K8).SO	
Q337	8-729-037-52	TRANSISTOR 2SD2216J-QR(K8).SO	
Q338	8-729-037-53	TRANSISTOR 2SB1462J-QR(K8).SO	
Q339	8-729-042-56	TRANSISTOR MGSF3455VT1	
Q340	8-729-037-52	TRANSISTOR 2SD2216J-QR(K8).SO	
Q341	8-729-049-91	TRANSISTOR 2SA2018H-T2L	
Q344	8-729-037-52	TRANSISTOR 2SD2216J-QR(K8).SO	
Q345	8-729-034-59	TRANSISTOR 2SA1745-6.7-TL	
Q348	8-729-037-52	TRANSISTOR 2SD2216J-QR(K8).SO	
Q349	8-729-037-53	TRANSISTOR 2SB1462J-QR(K8).SO	
Q351	8-729-037-52	TRANSISTOR 2SD2216J-QR(K8).SO	
		< RESISTOR >	
R300	1-218-953-11	RES-CHIP 1K 5% 1/16W	
R301	1-216-296-91	SHORT 0	
R302	1-216-296-91	SHORT 0	
R303	1-218-985-11	RES-CHIP 470K 5% 1/16W	
R304	1-218-989-11	RES-CHIP 1M 5% 1/16W	

Note :
The components identified by mark ⚠ or dotted line with mark ⚠ are critical for safety.
Replace only with part number specified.

Note :
Les composants identifiés par une marque ⚠ sont critiques pour la sécurité.
Ne les remplacer que par une pièce portant le numéro spécifié.

Ref. No.	Part No.	Description			Remarks
R305	1-218-969-11	RES-CHIP	22K	5%	1/16W
R306	1-216-150-91	RES-CHIP	10	5%	1/8W
R307	1-218-969-11	RES-CHIP	22K	5%	1/16W
R308	1-218-969-11	RES-CHIP	22K	5%	1/16W
R309	1-218-969-11	RES-CHIP	22K	5%	1/16W
R310	1-218-953-11	RES-CHIP	1K	5%	1/16W
R311	1-218-961-11	RES-CHIP	4.7K	5%	1/16W
R312	1-218-969-11	RES-CHIP	22K	5%	1/16W
R313	1-218-973-11	RES-CHIP	47K	5%	1/16W
R314	1-218-961-11	RES-CHIP	4.7K	5%	1/16W
R315	1-218-953-11	RES-CHIP	1K	5%	1/16W
R316	1-218-969-11	RES-CHIP	22K	5%	1/16W
R317	1-208-715-11	METAL CHIP	22K	0.5%	1/16W
R318	1-208-927-11	METAL CHIP	47K	0.5%	1/16W
R319	1-218-969-11	RES-CHIP	22K	5%	1/16W
R320	1-218-965-11	RES-CHIP	10K	5%	1/16W
R321	1-208-719-11	METAL CHIP	33K	0.5%	1/16W
R322	1-218-971-11	RES-CHIP	33K	5%	1/16W
R323	1-218-973-11	RES-CHIP	47K	5%	1/16W
R324	1-218-965-11	RES-CHIP	10K	5%	1/16W
R325	1-208-927-11	METAL CHIP	47K	0.5%	1/16W
R326	1-218-969-11	RES-CHIP	22K	5%	1/16W
R327	1-208-927-11	METAL CHIP	47K	0.5%	1/16W
R328	1-208-931-11	METAL CHIP	68K	0.5%	1/16W
R329	1-218-965-11	RES-CHIP	10K	5%	1/16W
R330	1-218-971-11	RES-CHIP	33K	5%	1/16W
R331	1-208-715-11	METAL CHIP	22K	0.5%	1/16W
R332	1-208-701-11	METAL CHIP	5.6K	0.5%	1/16W
R333	1-218-974-11	METAL CHIP	56K	0.5%	1/16W
R334	1-218-974-11	METAL CHIP	56K	0.5%	1/16W
R335	1-208-715-11	METAL CHIP	22K	0.5%	1/16W
R336	1-208-935-11	METAL CHIP	100K	0.5%	1/16W
R337	1-218-945-11	RES-CHIP	220	5%	1/16W
R338	1-208-912-11	METAL CHIP	11K	0.5%	1/16W
R339	1-208-697-11	METAL CHIP	3.9K	0.5%	1/16W
R340	1-208-697-11	METAL CHIP	3.9K	0.5%	1/16W
R341	1-208-943-11	METAL CHIP	220K	0.5%	1/16W
R342	1-218-941-11	RES-CHIP	100	5%	1/16W
R343	1-218-941-11	RES-CHIP	100	5%	1/16W
R344	1-218-937-11	RES-CHIP	47	5%	1/16W
R345	1-218-941-11	RES-CHIP	100	5%	1/16W
R346	1-218-953-11	RES-CHIP	1K	5%	1/16W
R347	1-218-953-11	RES-CHIP	1K	5%	1/16W
R348	1-218-941-11	RES-CHIP	100	5%	1/16W
R349	1-218-941-11	RES-CHIP	100	5%	1/16W
R350	1-218-973-11	RES-CHIP	47K	5%	1/16W
R351	1-218-965-11	RES-CHIP	10K	5%	1/16W
R352	1-218-970-11	METAL CHIP	27K	0.5%	1/16W
R353	1-208-687-11	METAL CHIP	1.5K	0.5%	1/16W
R354	1-208-719-11	METAL CHIP	33K	0.5%	1/16W
R355	1-218-973-11	RES-CHIP	47K	5%	1/16W
R356	1-218-969-11	RES-CHIP	22K	5%	1/16W
R358	1-218-977-11	RES-CHIP	100K	5%	1/16W
R359	1-218-973-11	RES-CHIP	47K	5%	1/16W
R360	1-218-973-11	RES-CHIP	47K	5%	1/16W
R361	1-218-969-11	RES-CHIP	22K	5%	1/16W
R362	1-218-973-11	RES-CHIP	47K	5%	1/16W
R363	1-218-965-11	RES-CHIP	10K	5%	1/16W
R364	1-218-989-11	RES-CHIP	1M	5%	1/16W
R365	1-218-973-11	RES-CHIP	47K	5%	1/16W
R366	1-218-978-11	METAL CHIP	120K	0.5%	1/16W
R367	1-208-939-11	METAL CHIP	150K	0.5%	1/16W
R368	1-218-878-11	METAL CHIP	20K	0.5%	1/16W
R369	1-218-978-11	METAL CHIP	120K	0.5%	1/16W
R370	1-218-974-11	METAL CHIP	56K	0.5%	1/16W
R371	1-208-713-11	METAL CHIP	18K	0.5%	1/16W
R372	1-218-978-11	METAL CHIP	120K	0.5%	1/16W
R373	1-208-909-11	METAL CHIP	8.2K	0.5%	1/16W
R374	1-208-943-11	METAL CHIP	220K	0.5%	1/16W
R375	1-216-864-11	METAL CHIP	0	5%	1/16W
R376	1-218-973-11	RES-CHIP	47K	5%	1/16W
R377	1-216-864-11	METAL CHIP	0	5%	1/16W
R378	1-218-973-11	RES-CHIP	47K	5%	1/16W
R380	1-218-990-11	SHORT	0		
R381	1-218-973-11	RES-CHIP	47K	5%	1/16W
R382	1-218-878-11	METAL CHIP	20K	0.5%	1/16W
R383	1-208-935-11	METAL CHIP	100K	0.5%	1/16W
R384	1-218-977-11	RES-CHIP	100K	5%	1/16W
R385	1-218-969-11	RES-CHIP	22K	5%	1/16W
R386	1-218-949-11	RES-CHIP	470	5%	1/16W
R388	1-218-978-11	METAL CHIP	120K	0.5%	1/16W
R389	1-208-933-11	METAL CHIP	82K	0.5%	1/16W
R390	1-208-699-11	METAL CHIP	4.7K	0.5%	1/16W
R391	1-217-671-11	METAL CHIP	1	5%	1/10W
R392	1-217-671-11	METAL CHIP	1	5%	1/10W
R393	1-216-295-91	SHORT	0		
R394	1-216-295-91	SHORT	0		
R396	1-218-990-11	SHORT	0		
R397	1-218-982-11	RES-CHIP	270K	5%	1/16W
R399	1-216-295-91	SHORT	0		
R400	1-218-961-11	RES-CHIP	4.7K	5%	1/16W
R401	1-218-953-11	RES-CHIP	1K	5%	1/16W
R456	1-218-990-11	SHORT	0		
		< TRANSFORMER >			
T300	1-435-456-21	TRANSFORMER, DC-DC CONVERTER			
T301	1-435-518-21	TRANSFORMER, DC-DC CONVERTER			

	A-7074-412-A	FK-076 BOARD, COMPLETE
		**********
		(Ref.No.;1000Series)
		< CONNECTOR >
CN500	1-784-421-11	CONNECTOR, FFC/FPC (ZIF) 27P
CN501	1-691-926-21	CONNECTOR, BOARD TO BOARD 36P
		< DIODE >
D500	8-719-061-81	DIODE TLYU1002(TPX1,SONY)
D501	8-719-061-81	DIODE TLYU1002(TPX1,SONY)
D502	8-719-061-81	DIODE TLYU1002(TPX1,SONY)
D503	8-719-061-81	DIODE TLYU1002(TPX1,SONY)
D504	8-719-061-81	DIODE TLYU1002(TPX1,SONY)
D505	8-719-061-81	DIODE TLYU1002(TPX1,SONY)
D506	8-719-061-81	DIODE TLYU1002(TPX1,SONY)
D507	8-719-061-81	DIODE TLYU1002(TPX1,SONY)
D508	8-719-061-81	DIODE TLYU1002(TPX1,SONY)
D509	8-719-061-81	DIODE TLYU1002(TPX1,SONY)

Ref. No.	Part No.	Description			Remarks
D510	8-719-061-81	DIODE TLYU1002(TPX1,SONY)			
D511	8-719-061-81	DIODE TLYU1002(TPX1,SONY)			
D512	8-719-062-16	DIODE 01ZA8.2(TPL3)			
		< RESISTOR >			
R502	1-218-950-11	RES-CHIP	560	5%	1/16W
R503	1-218-954-11	RES-CHIP	1.2K	5%	1/16W
R504	1-218-954-11	RES-CHIP	1.2K	5%	1/16W
R505	1-218-950-11	RES-CHIP	560	5%	1/16W
R506	1-218-955-11	RES-CHIP	1.5K	5%	1/16W
R507	1-218-955-11	RES-CHIP	1.5K	5%	1/16W
R508	1-218-950-11	RES-CHIP	560	5%	1/16W
R509	1-218-959-11	RES-CHIP	3.3K	5%	1/16W
R510	1-218-959-11	RES-CHIP	3.3K	5%	1/16W
R511	1-218-950-11	RES-CHIP	560	5%	1/16W
R512	1-218-963-11	RES-CHIP	6.8K	5%	1/16W
R513	1-218-963-11	RES-CHIP	6.8K	5%	1/16W
R514	1-218-950-11	RES-CHIP	560	5%	1/16W
R515	1-218-969-11	RES-CHIP	22K	5%	1/16W
R516	1-218-950-11	RES-CHIP	560	5%	1/16W
		< SWITCH >			
S500	1-771-138-61	SWITCH, KEY BOARD(STOP)			
S501	1-771-138-61	SWITCH, KEY BOARD(PAUSE)			
S502	1-771-138-61	SWITCH, KEY BOARD(REW)			
S503	1-771-138-61	SWITCH, KEY BOARD(FF)			
S504	1-771-138-61	SWITCH, KEY BOARD(PLAY)			
S505	1-771-138-61	SWITCH, KEY BOARD(SLOW)			
S506	1-771-138-61	SWITCH, KEY BOARD(REC)			
S507	1-771-138-61	SWITCH, KEY BOARD(REC)			
S508	1-771-138-61	SWITCH, KEY BOARD(AUDIO DUB)			
S509	1-771-138-61	SWITCH, KEY BOARD(EDIT SEARCH +)			
S510	1-771-138-61	SWITCH, KEY BOARD(END SEARCH)			
S511	1-771-138-61	SWITCH, KEY BOARD(EDIT SEARCH -)			

	A-7073-418-A	FP-594 FLEXIBLE BOARD ********** (Ref.No.;9000Series)			
		< CONNECTOR >			
CN901	1-784-723-11	PIN, CONNECTOR 4P			
		< DIODE >			
D901	8-719-067-13	DIODE GL453K			
		< HOLE ELEMENT >			
H901	8-719-061-28	DIODE HW-105-FT-V(S REEL)			
H902	8-719-061-28	DIODE HW-105-FT-V(T REEL)			
		< TRANSISTOR >			
Q901	8-729-907-25	PHOTO TRANSISTOR PT4850F(TAPE END)			
Q902	8-729-907-25	PHOTO TRANSISTOR PT4850F(TAPE TOP)			
		< SWITCH >			
S901	8-711-039-51	SWITCH, PUSH(C IN SW)			
S902	8-572-719-32	SWITCH, PUSH(1KEY)(REC PROOF)			
S903	8-771-325-11	ENCODER, ROTARY(SWITCH)(MODE)			

Ref. No.	Part No.	Description			Remarks
	A-7074-414-A	HL-011 BOARD, COMPLETE ********** (Ref.No.;20000Series)			
		< CAPACITOR >			
C1701	1-162-970-11	CERAMIC CHIP	0.01uF	10%	25V
		< CONNECTOR >			
CN1701	1-766-337-21	CONNECTOR, FFC/FPC 7P			
CN1702	1-778-711-11	CONNECTOR, FFC/FPC (ZIF) 5P			
CN1703	1-573-930-11	CONNECTOR, FFC/FPC (ZIF) 21P			
		< DIODE >			
D1701	8-719-073-03	DIODE MA8082-(K8).S0			
		< IC >			
IC1701	8-759-573-02	IC BU9735K-E2			
		< RESISTOR >			
R1701	1-218-954-11	RES-CHIP	1.2K	5%	1/16W
R1702	1-218-955-11	RES-CHIP	1.5K	5%	1/16W
R1703	1-218-959-11	RES-CHIP	3.3K	5%	1/16W
R1704	1-216-855-11	METAL CHIP	680K	5%	1/16W

	A-7074-402-A	JK-190 BOARD, COMPLETE ********** (Ref.No.;2000Series)			
		< CAPACITOR >			
C301	1-164-937-11	CERAMIC CHIP	0.001uF	10%	16V
C302	1-164-937-11	CERAMIC CHIP	0.001uF	10%	16V
C303	1-164-937-11	CERAMIC CHIP	0.001uF	10%	16V
C304	1-164-937-11	CERAMIC CHIP	0.001uF	10%	16V
		< CONNECTOR >			
CN300	1-785-828-11	CONNECTOR, SQUARE TYPE 4P			
CN301	1-785-433-21	CONNECTOR, BOARD TO BOARD 40P			
		< DIODE >			
D300	8-719-062-16	DIODE 01ZA8.2(TPL3)			
D301	8-719-073-03	DIODE MA8082-(K8).S0			
D302	8-719-062-16	DIODE 01ZA8.2(TPL3)			
D303	8-719-062-16	DIODE 01ZA8.2(TPL3)			
D304	8-719-062-16	DIODE 01ZA8.2(TPL3)			
D305	8-719-073-03	DIODE MA8082-(K8).S0			
D306	8-719-062-16	DIODE 01ZA8.2(TPL3)			
D307	8-719-073-03	DIODE MA8082-(K8).S0			
D308	8-719-073-03	DIODE MA8082-(K8).S0			
D309	8-719-072-91	DIODE MAZJ200D0LS0			
D310	8-719-062-16	DIODE 01ZA8.2(TPL3)			
D311	8-719-422-70	DIODE MA8075-TX			
D312	8-719-062-16	DIODE 01ZA8.2(TPL3)			
D313	8-719-062-16	DIODE 01ZA8.2(TPL3)			
D314	8-719-073-03	DIODE MA8082-(K8).S0			
		< FERRITE BEAD >			
FB300	1-500-444-11	FERRITE	0UH		
FB301	1-500-444-11	FERRITE	0UH		

Ref. No.	Part No.	Description			Remarks
		< JACK >			
J300	1-694-713-11	TERMINAL BOARD(VIDEO/CH1/CH2)			
J301	1-566-850-31	CONNECTOR, (S) TERMINAL 4P(S-VIDEO)			
J302	1-563-282-21	JACK, SMALL TYPE(🎧)			
J303	1-793-995-11	JACK, SUPER SMALL TYPE(LANC)			
		< COIL >			
L301	1-412-963-11	INDUCTOR	100uH		
L302	1-412-963-11	INDUCTOR	100uH		
		< RESISTOR >			
R300	1-216-864-11	METAL CHIP	0	5%	1/16W
R301	1-216-864-11	METAL CHIP	0	5%	1/16W
R302	1-216-864-11	METAL CHIP	0	5%	1/16W
R303	1-216-864-11	METAL CHIP	0	5%	1/16W
R304	1-216-864-11	METAL CHIP	0	5%	1/16W
R305	1-216-864-11	METAL CHIP	0	5%	1/16W
R306	1-216-864-11	METAL CHIP	0	5%	1/16W
R307	1-216-864-11	METAL CHIP	0	5%	1/16W
R308	1-216-864-11	METAL CHIP	0	5%	1/16W
R309	1-216-864-11	METAL CHIP	0	5%	1/16W
R311	1-216-864-11	METAL CHIP	0	5%	1/16W
R312	1-216-864-11	METAL CHIP	0	5%	1/16W
R313	1-216-864-11	METAL CHIP	0	5%	1/16W
R314	1-216-864-11	METAL CHIP	0	5%	1/16W
R315	1-216-864-11	METAL CHIP	0	5%	1/16W
R316	1-216-864-11	METAL CHIP	0	5%	1/16W
R317	1-218-990-11	SHORT	0		
R318	1-216-864-11	METAL CHIP	0	5%	1/16W
R319	1-218-990-11	SHORT	0		
R320	1-216-864-11	METAL CHIP	0	5%	1/16W
R321	1-216-864-11	METAL CHIP	0	5%	1/16W

	A-7074-406-A	KP-010 BOARD, COMPLETE ********** (Ref.No.;1000Series)			
		< CONNECTOR >			
CN550	1-766-336-21	CONNECTOR, FFC/FPC 6P			
		< DIODE >			
D550	8-719-064-61	DIODE 01BZA8.2(TE85L)			
		< SWITCH >			
S550	1-771-025-41	SWITCH, ROTARY (ENCODER) (SEL/PUSH EXEC)			

	A-7074-401-A	LA-026 BOARD, COMPLETE ********** (Ref.No.;20000Series)			
		< CAPACITOR >			
C070	1-125-777-11	CERAMIC CHIP	0.1uF	10%	10V
C071	1-107-826-91	CERAMIC CHIP	0.1uF	10%	16V
C072	1-107-826-91	CERAMIC CHIP	0.1uF	10%	16V
C073	1-164-942-11	CERAMIC CHIP	0.0068uF	10%	16V
C074	1-164-942-11	CERAMIC CHIP	0.0068uF	10%	16V
C075	1-107-823-11	CERAMIC CHIP	0.47uF	10%	16V
C076	1-125-837-91	CERAMIC CHIP	1uF	10%	6.3V
C077	1-107-823-11	CERAMIC CHIP	0.47uF	10%	16V
C078	1-125-777-11	CERAMIC CHIP	0.1uF	10%	10V
C079	1-125-926-91	TANTAL. CHIP	4.7uF	20%	6.3V
C080	1-117-919-11	TANTAL. CHIP	10uF	20%	6.3V
C085	1-115-467-11	CERAMIC CHIP	0.22uF	10%	10V
C086	1-115-467-11	CERAMIC CHIP	0.22uF	10%	10V
C087	1-119-923-81	CERAMIC CHIP	0.047uF	10%	10V
C088	1-119-923-81	CERAMIC CHIP	0.047uF	10%	10V
C089	1-164-940-11	CERAMIC CHIP	0.0033uF	10%	16V
C090	1-107-819-11	CERAMIC CHIP	0.022uF	10%	16V
C091	1-107-819-11	CERAMIC CHIP	0.022uF	10%	16V
C092	1-164-940-11	CERAMIC CHIP	0.0033uF	10%	16V
C093	1-117-919-11	TANTAL. CHIP	10uF	20%	6.3V
C094	1-117-919-11	TANTAL. CHIP	10uF	20%	6.3V
C095	1-127-895-91	TANTAL. CHIP	22uF	20%	4V
C096	1-125-777-11	CERAMIC CHIP	0.1uF	10%	10V
C097	1-125-926-91	TANTAL. CHIP	4.7uF	20%	6.3V
C098	1-125-838-91	CERAMIC CHIP	2.2uF	10%	6.3V
C099	1-125-838-91	CERAMIC CHIP	2.2uF	10%	6.3V
C100	1-127-760-91	CERAMIC CHIP	4.7uF	10%	6.3V
C140	1-164-943-11	CERAMIC CHIP	0.01uF	10%	16V
C141	1-164-943-11	CERAMIC CHIP	0.01uF	10%	16V
C142	1-164-941-11	CERAMIC CHIP	0.0047uF	10%	16V
C143	1-115-156-11	CERAMIC CHIP	1uF		10V
C145	1-125-777-11	CERAMIC CHIP	0.1uF	10%	10V
C146	1-125-777-11	CERAMIC CHIP	0.1uF	10%	10V
C147	1-164-935-11	CERAMIC CHIP	470PF	10%	16V
C148	1-164-489-11	CERAMIC CHIP	0.22uF	10%	16V
C149	1-164-937-11	CERAMIC CHIP	0.001uF	10%	16V
C150	1-107-823-11	CERAMIC CHIP	0.47uF	10%	16V
C151	1-164-943-11	CERAMIC CHIP	0.01uF	10%	16V
C152	1-125-777-11	CERAMIC CHIP	0.1uF	10%	10V
C153	1-164-939-11	CERAMIC CHIP	0.0022uF	10%	16V
C154	1-104-851-11	TANTAL. CHIP	10uF	20%	10V
C155	1-125-777-11	CERAMIC CHIP	0.1uF	10%	10V
C156	1-125-777-11	CERAMIC CHIP	0.1uF	10%	10V
C157	1-127-895-91	TANTAL. CHIP	22uF	20%	4V
C158	1-127-895-91	TANTAL. CHIP	22uF	20%	4V
C159	1-125-777-11	CERAMIC CHIP	0.1uF	10%	10V
C160	1-164-866-11	CERAMIC CHIP	47PF	5%	16V
C161	1-164-866-11	CERAMIC CHIP	47PF	5%	16V
C162	1-115-467-11	CERAMIC CHIP	0.22uF	10%	10V
C163	1-115-467-11	CERAMIC CHIP	0.22uF	10%	10V
C164	1-164-935-11	CERAMIC CHIP	470PF	10%	16V
C165	1-164-935-11	CERAMIC CHIP	470PF	10%	16V
C166	1-127-895-91	TANTAL. CHIP	22uF	20%	4V
C167	1-164-935-11	CERAMIC CHIP	470PF	10%	16V
C168	1-164-935-11	CERAMIC CHIP	470PF	10%	16V
C170	1-125-777-11	CERAMIC CHIP	0.1uF	10%	10V
C200	1-127-895-91	TANTAL. CHIP	22uF	20%	4V
C201	1-127-895-91	TANTAL. CHIP	22uF	20%	4V
C202	1-164-677-11	CERAMIC CHIP	0.033uF	10%	16V
C203	1-164-677-11	CERAMIC CHIP	0.033uF	10%	16V
C204	1-107-819-11	CERAMIC CHIP	0.022uF	10%	16V
C205	1-107-819-11	CERAMIC CHIP	0.022uF	10%	16V
C206	1-107-819-11	CERAMIC CHIP	0.022uF	10%	16V
C207	1-107-819-11	CERAMIC CHIP	0.022uF	10%	16V
C208	1-110-569-11	TANTAL. CHIP	47uF	20%	4V

Ref. No.	Part No.	Description			Remarks
C209	1-110-569-11	TANTAL. CHIP	47uF	20%	4V
C210	1-110-569-11	TANTAL. CHIP	47uF	20%	4V
C211	1-110-569-11	TANTAL. CHIP	47uF	20%	4V
C214	1-127-895-91	TANTAL. CHIP	22uF	20%	4V
C215	1-125-777-11	CERAMIC CHIP	0.1uF	10%	10V
		< CONNECTOR >			
CN050	1-784-423-21	CONNECTOR, FFC/FPC (ZIF) 39P			
CN051	1-778-086-21	CONNECTOR, BOARD TO BOARD 80P			
CN052	1-784-421-11	CONNECTOR, FFC/FPC (ZIF) 27P			
CN053	1-766-843-21	CONNECTOR, FFC/FPC 27P			
CN054	1-766-336-21	CONNECTOR, FFC/FPC 6P			
CN055	1-766-336-21	CONNECTOR, FFC/FPC 6P			
CN056	1-766-350-21	CONNECTOR, FFC/FPC 20P			
		< DIODE >			
D070	8-719-064-61	DIODE 01BZA8.2(TE85L)			
D140	8-719-056-23	DIODE MA2S111-(K8).SO			
		< FERRITE BEAD >			
FB140	1-414-445-11	FERRITE	0UH		
		< IC >			
IC070	8-759-359-49	IC NJM3414AV(TE2)			
IC071	8-759-359-49	IC NJM3414AV(TE2)			
IC072	8-759-823-51	IC LB1830M-TLM			
IC073	8-759-444-87	IC NJM324V(TE2)			
IC074	8-759-058-45	IC NJM3403AV(TE2)			
IC075	8-759-478-92	IC TC7SET04FU(TE85R)			
IC076	8-759-478-92	IC TC7SET04FU(TE85R)			
IC140	8-759-637-96	IC uPD16877MA-6A5-E2			
IC141	8-759-444-87	IC NJM324V(TE2)			
IC142	8-759-075-66	IC TA75S01F(TE85R)			
IC143	8-759-327-33	IC BU9241FS-E2			
IC144	8-759-327-33	IC BU9241FS-E2			
IC200	8-759-489-19	IC uPC6756GR-8JG-E2			
		< COIL >			
L070	1-412-951-11	INDUCTOR	10uH		
L071	1-412-963-11	INDUCTOR	100uH		
L072	1-414-754-11	INDUCTOR	10uH		
L073	1-414-771-91	INDUCTOR CHIP	10uH		
L140	1-414-754-11	INDUCTOR	10uH		
L141	1-414-754-11	INDUCTOR	10uH		
L142	1-414-754-11	INDUCTOR	10uH		
L143	1-414-754-11	INDUCTOR	10uH		
L200	1-414-754-11	INDUCTOR	10uH		
		< TRANSISTOR >			
Q050	8-729-037-72	TRANSISTOR	UN9211J-(K8).SO		
Q070	8-729-037-53	TRANSISTOR	2SB1462J-QR(K8).SO		
Q071	8-729-037-53	TRANSISTOR	2SB1462J-QR(K8).SO		
Q072	8-729-037-74	TRANSISTOR	UN9213J-(K8).SO		
Q073	8-729-037-53	TRANSISTOR	2SB1462J-QR(K8).SO		
Q074	8-729-037-74	TRANSISTOR	UN9213J-(K8).SO		
Q075	8-729-037-53	TRANSISTOR	2SB1462J-QR(K8).SO		
Q076	8-729-013-31	TRANSISTOR	2SA1588-OY-TE85L		
Q077	8-729-037-53	TRANSISTOR	2SB1462J-QR(K8).SO		
Q078	8-729-037-74	TRANSISTOR	UN9213J-(K8).SO		

Ref. No.	Part No.	Description			Remarks
Q140	8-729-037-53	TRANSISTOR	2SB1462J-QR(K8).SO		
Q141	8-729-037-74	TRANSISTOR	UN9213J-(K8).SO		
Q142	8-729-037-52	TRANSISTOR	2SD2216J-QR(K8).SO		
Q143	8-729-037-52	TRANSISTOR	2SD2216J-QR(K8).SO		
Q200	8-729-013-31	TRANSISTOR	2SA1588-OY-TE85L		
Q201	8-729-037-74	TRANSISTOR	UN9213J-(K8).SO		
		< RESISTOR >			
R051	1-218-954-11	RES-CHIP	1.2K	5%	1/16W
R052	1-218-955-11	RES-CHIP	1.5K	5%	1/16W
R053	1-218-959-11	RES-CHIP	3.3K	5%	1/16W
R054	1-218-963-11	RES-CHIP	6.8K	5%	1/16W
R055	1-218-969-11	RES-CHIP	22K	5%	1/16W
R058	1-216-295-91	SHORT	0		
R063	1-216-295-91	SHORT	0		
R065	1-216-864-11	METAL CHIP	0	5%	1/16W
R066	1-218-990-11	SHORT	0		
R067	1-216-864-11	METAL CHIP	0	5%	1/16W
R070	1-208-885-11	METAL CHIP	820	0.5%	1/16W
R071	1-208-703-11	METAL CHIP	6.8K	0.5%	1/16W
R072	1-208-885-11	METAL CHIP	820	0.5%	1/16W
R073	1-208-703-11	METAL CHIP	6.8K	0.5%	1/16W
R074	1-208-707-11	METAL CHIP	10K	0.5%	1/16W
R075	1-208-707-11	METAL CHIP	10K	0.5%	1/16W
R076	1-208-707-11	METAL CHIP	10K	0.5%	1/16W
R077	1-208-935-11	METAL CHIP	100K	0.5%	1/16W
R078	1-208-707-11	METAL CHIP	10K	0.5%	1/16W
R079	1-208-707-11	METAL CHIP	10K	0.5%	1/16W
R080	1-208-935-11	METAL CHIP	100K	0.5%	1/16W
R081	1-208-711-11	METAL CHIP	15K	0.5%	1/16W
R082	1-208-707-11	METAL CHIP	10K	0.5%	1/16W
R083	1-208-711-11	METAL CHIP	15K	0.5%	1/16W
R084	1-218-961-11	RES-CHIP	4.7K	5%	1/16W
R085	1-216-134-00	METAL CHIP	2.2	5%	1/8W
R086	1-218-973-11	RES-CHIP	47K	5%	1/16W
R087	1-218-973-11	RES-CHIP	47K	5%	1/16W
R088	1-208-927-11	METAL CHIP	47K	0.5%	1/16W
R089	1-208-927-11	METAL CHIP	47K	0.5%	1/16W
R091	1-208-935-11	METAL CHIP	100K	0.5%	1/16W
R092	1-208-935-11	METAL CHIP	100K	0.5%	1/16W
R093	1-208-943-11	METAL CHIP	220K	0.5%	1/16W
R095	1-208-943-11	METAL CHIP	220K	0.5%	1/16W
R096	1-208-707-11	METAL CHIP	10K	0.5%	1/16W
R097	1-208-707-11	METAL CHIP	10K	0.5%	1/16W
R098	1-208-935-11	METAL CHIP	100K	0.5%	1/16W
R099	1-208-935-11	METAL CHIP	100K	0.5%	1/16W
R100	1-218-969-11	RES-CHIP	22K	5%	1/16W
R101	1-218-969-11	RES-CHIP	22K	5%	1/16W
R102	1-218-969-11	RES-CHIP	22K	5%	1/16W
R103	1-218-969-11	RES-CHIP	22K	5%	1/16W
R104	1-218-969-11	RES-CHIP	22K	5%	1/16W
R105	1-218-969-11	RES-CHIP	22K	5%	1/16W
R106	1-218-975-11	RES-CHIP	68K	5%	1/16W
R107	1-218-977-11	RES-CHIP	100K	5%	1/16W
R108	1-218-975-11	RES-CHIP	68K	5%	1/16W
R109	1-218-977-11	RES-CHIP	100K	5%	1/16W
R110	1-218-953-11	RES-CHIP	1K	5%	1/16W
R111	1-218-973-11	RES-CHIP	47K	5%	1/16W

Ref. No.	Part No.	Description			Remarks
R112	1-218-953-11	RES-CHIP	1K	5%	1/16W
R113	1-218-977-11	RES-CHIP	100K	5%	1/16W
R114	1-218-965-11	RES-CHIP	10K	5%	1/16W
R115	1-218-965-11	RES-CHIP	10K	5%	1/16W
R116	1-218-953-11	RES-CHIP	1K	5%	1/16W
R117	1-218-953-11	RES-CHIP	1K	5%	1/16W
R118	1-218-953-11	RES-CHIP	1K	5%	1/16W
R119	1-218-973-11	RES-CHIP	47K	5%	1/16W
R120	1-218-965-11	RES-CHIP	10K	5%	1/16W
R140	1-218-953-11	RES-CHIP	1K	5%	1/16W
R141	1-218-965-11	RES-CHIP	10K	5%	1/16W
R142	1-218-975-11	RES-CHIP	68K	5%	1/16W
R143	1-218-975-11	RES-CHIP	68K	5%	1/16W
R144	1-218-975-11	RES-CHIP	68K	5%	1/16W
R145	1-218-975-11	RES-CHIP	68K	5%	1/16W
R146	1-218-975-11	RES-CHIP	68K	5%	1/16W
R147	1-216-295-91	SHORT	0		
R148	1-218-973-11	RES-CHIP	47K	5%	1/16W
R150	1-218-953-11	RES-CHIP	1K	5%	1/16W
R151	1-218-989-11	RES-CHIP	1M	5%	1/16W
R152	1-218-957-11	RES-CHIP	2.2K	5%	1/16W
R153	1-218-965-11	RES-CHIP	10K	5%	1/16W
R154	1-218-981-11	RES-CHIP	220K	5%	1/16W
R155	1-218-985-11	RES-CHIP	470K	5%	1/16W
R156	1-218-985-11	RES-CHIP	470K	5%	1/16W
R157	1-218-957-11	RES-CHIP	2.2K	5%	1/16W
R158	1-218-967-11	RES-CHIP	15K	5%	1/16W
R159	1-218-969-11	RES-CHIP	22K	5%	1/16W
R160	1-218-985-11	RES-CHIP	470K	5%	1/16W
R161	1-218-953-11	RES-CHIP	1K	5%	1/16W
R162	1-218-953-11	RES-CHIP	1K	5%	1/16W
R163	1-218-947-11	RES-CHIP	330	5%	1/16W
R164	1-218-969-11	RES-CHIP	22K	5%	1/16W
R165	1-218-953-11	RES-CHIP	1K	5%	1/16W
R166	1-218-965-11	RES-CHIP	10K	5%	1/16W
R167	1-218-973-11	RES-CHIP	47K	5%	1/16W
R168	1-208-927-11	METAL CHIP	47K	0.5%	1/16W
R169	1-208-713-11	METAL CHIP	18K	0.5%	1/16W
R170	1-208-675-11	METAL CHIP	470	0.5%	1/16W
R171	1-218-965-11	RES-CHIP	10K	5%	1/16W
R172	1-218-965-11	RES-CHIP	10K	5%	1/16W
R173	1-218-953-11	RES-CHIP	1K	5%	1/16W
R174	1-218-953-11	RES-CHIP	1K	5%	1/16W
R177	1-218-974-11	RES-CHIP	56K	5%	1/16W
R178	1-218-950-11	RES-CHIP	560	5%	1/16W
R179	1-218-965-11	RES-CHIP	10K	5%	1/16W
R180	1-218-965-11	RES-CHIP	10K	5%	1/16W
R181	1-218-953-11	RES-CHIP	1K	5%	1/16W
R182	1-218-953-11	RES-CHIP	1K	5%	1/16W
R185	1-218-974-11	RES-CHIP	56K	5%	1/16W
R186	1-218-950-11	RES-CHIP	560	5%	1/16W
R187	1-216-295-91	SHORT	0		
R200	1-218-969-11	RES-CHIP	22K	5%	1/16W
R201	1-218-969-11	RES-CHIP	22K	5%	1/16W
R202	1-218-969-11	RES-CHIP	22K	5%	1/16W

Ref. No.	Part No.	Description			Remarks
R203	1-218-969-11	RES-CHIP	22K	5%	1/16W
R204	1-218-965-11	RES-CHIP	10K	5%	1/16W
R205	1-218-965-11	RES-CHIP	10K	5%	1/16W
R206	1-218-989-11	RES-CHIP	1M	5%	1/16W
R209	1-218-989-11	RES-CHIP	1M	5%	1/16W
R210	1-218-953-11	RES-CHIP	1K	5%	1/16W
R211	1-218-965-11	RES-CHIP	10K	5%	1/16W
	A-7074-467-A	LB-065D BOARD, COMPLETE			
		**********			
					(Ref.No.;1000Series)
		< CAPACITOR >			
C200	1-125-777-11	CERAMIC CHIP	0.1uF	10%	10V
C201	1-113-682-11	TANTAL. CHIP	33uF	20%	10V
C202	1-115-566-11	CERAMIC CHIP	4.7uF	10%	10V
⚠C203	1-115-464-91	CERAMIC CHIP	0.0022uF	10%	630V
		< CONNECTOR >			
CN200	1-784-421-11	CONNECTOR, FFC/FPC (ZIF) 27P			
CN201	1-691-380-21	CONNECTOR, FFC/FPC 16P			
		< DIODE >			
D200	8-719-018-51	DIODE CL-170R-CD-T			
		< IC >			
IC200	8-759-485-79	IC TC7SET08FU(TE85R)			
		< COIL >			
L200	1-412-031-11	INDUCTOR CHIP	47uH		
L201	1-469-525-91	INDUCTOR	10uH		
		< FLUORESCENT INDICATOR >			
⚠ND200	1-517-933-41	FLUORESCENT TUBE (0.44)			
		< TRANSISTOR >			
Q200	8-729-039-24	TRANSISTOR	FX216-TL1		
		< RESISTOR >			
R200	1-218-948-11	RES-CHIP	390	5%	1/16W
R203	1-216-808-11	METAL CHIP	82	5%	1/16W
R204	1-218-965-11	RES-CHIP	10K	5%	1/16W
R205	1-218-977-11	RES-CHIP	100K	5%	1/16W
R206	1-218-977-11	RES-CHIP	100K	5%	1/16W
R207	1-218-977-11	RES-CHIP	100K	5%	1/16W
R208	1-218-977-11	RES-CHIP	100K	5%	1/16W
		< TRANSFORMER >			
⚠T200	1-435-225-21	TRANSFORMER, INVERTER			

Note :
The components identified by mark ⚠ or dotted line with mark ⚠ are critical for safety.
Replace only with part number specified.

Note :
Les composants identifiés par une marque ⚠ sont critiques pour la sécurité.
Ne les remplacer que par une pièce portant le numéro spécifié.

MA-386D **MK-014** **MS-049** **PD-126**

Ref. No.	Part No.	Description			Remarks
	A-7074-471-A	MA-386D BOARD, COMPLETE			
		**********			
					(Ref.No.;20000Series)
		< CAPACITOR >			
C1109	1-117-919-11	TANTAL. CHIP	10uF	20%	6.3V
		< CONNECTOR >			
CN1103	1-784-421-11	CONNECTOR, FFC/FPC (ZIF) 27P			
CN1106	1-784-420-11	CONNECTOR, FFC/FPC (ZIF) 21P			
		< DIODE >			
D1105	8-719-951-20	DIODE BR1102W-TR			
D1106	8-719-073-03	DIODE MA8082-(K8).S0			
D1107	8-719-073-01	DIODE MA111-(K8).S0			
D1108	8-719-073-01	DIODE MA111-(K8).S0			
D1109	8-719-073-01	DIODE MA111-(K8).S0			
D1110	8-719-073-01	DIODE MA111-(K8).S0			
		< IC >			
IC1102	8-749-013-13	IC RS-70-TU			
		< TRANSISTOR >			
Q1104	8-729-037-71	TRANSISTOR	UN9210J-(TX).SO		
		< RESISTOR >			
R1121	1-218-951-11	RES-CHIP	680	5%	1/16W
R1122	1-218-990-11	SHORT	0		
R1123	1-218-990-11	SHORT	0		
R1125	1-218-937-11	RES-CHIP	47	5%	1/16W
R1126	1-218-953-11	RES-CHIP	1K	5%	1/16W
R1127	1-218-953-11	RES-CHIP	1K	5%	1/16W
R1128	1-218-965-11	RES-CHIP	10K	5%	1/16W
R1129	1-218-965-11	RES-CHIP	10K	5%	1/16W
R1130	1-218-977-11	RES-CHIP	100K	5%	1/16W
		< SWITCH >			
S1100	1-572-473-11	SWITCH, TACTIL			
	A-7074-408-A	MK-014 BOARD, COMPLETE			
		**********			
					(Ref.No.;1000Series)
		< CONNECTOR >			
CN001	1-779-327-11	CONNECTOR, FFC/FPC 6P			
		< DIODE >			
D003	8-719-061-82	DIODE TLSU1002(TPX1,SONY)			
D004	8-719-073-03	DIODE MA8082-(K8).S0			
		< RESISTOR >			
R001	1-218-950-11	RES-CHIP	560	5%	1/16W
R002	1-218-954-11	RES-CHIP	1.2K	5%	1/16W
R003	1-218-955-11	RES-CHIP	1.5K	5%	1/16W
R004	1-218-959-11	RES-CHIP	3.3K	5%	1/16W
R005	1-218-963-11	RES-CHIP	6.8K	5%	1/16W
R006	1-218-969-11	RES-CHIP	22K	5%	1/16W

Ref. No.	Part No.	Description			Remarks
		< SWITCH >			
S001	1-771-138-61	SWITCH, KEY BOARD(GAIN)			
S002	1-771-138-61	SWITCH, KEY BOARD(SHUTTER SPEED)			
S003	1-771-138-61	SWITCH, KEY BOARD(WHT BAL)			
S004	1-771-138-61	SWITCH, KEY BOARD(AE SHIFT)			
S005	1-762-648-21	SWITCH, SLIDE(AUTOLOCK/HOLD)			
	A-7074-407-A	MS-049 BOARD, COMPLETE			
		**********			
					(Ref.No.;20000Series)
		< CONNECTOR >			
CN775	1-766-644-21	CONNECTOR, FFC/FPC 8P			
CN776	1-793-641-11	CONNECTOR, MEMORY STICK			
		< RESISTOR >			
R1001	1-216-295-91	SHORT	0		
R1002	1-216-864-11	METAL CHIP	0	5%	1/16W
R1003	1-218-990-11	SHORT	0		
R1004	1-216-864-11	METAL CHIP	0	5%	1/16W
	A-7096-158-A	PD-126 BOARD, COMPLETE (SERVICE)			
		**********			
					(Ref.No.;20000Series)
		< CAPACITOR >			
C2101	1-119-750-11	TANTAL. CHIP	22uF	20%	6.3V
C2102	1-125-777-11	CERAMIC CHIP	0.1uF	10%	10V
C2103	1-164-943-11	CERAMIC CHIP	0.01uF	10%	16V
C2104	1-117-919-11	TANTAL. CHIP	10uF	20%	6.3V
C2105	1-125-777-11	CERAMIC CHIP	0.1uF	10%	10V
C2107	1-107-826-91	CERAMIC CHIP	0.1uF	10%	16V
C2108	1-164-943-11	CERAMIC CHIP	0.01uF	10%	16V
C2109	1-164-943-11	CERAMIC CHIP	0.01uF	10%	16V
C2110	1-164-943-11	CERAMIC CHIP	0.01uF	10%	16V
C2111	1-164-739-11	CERAMIC CHIP	560PF	5%	50V
C2112	1-125-838-91	CERAMIC CHIP	2.2uF	10%	6.3V
C2113	1-164-004-11	CERAMIC CHIP	0.1uF	10%	25V
C2114	1-164-943-11	CERAMIC CHIP	0.01uF	10%	16V
C2115	1-107-687-11	TANTAL. CHIP	3.3uF	20%	20V
C2116	1-164-937-11	CERAMIC CHIP	0.001uF	10%	16V
C2117	1-164-874-11	CERAMIC CHIP	100PF	5%	16V
C2118	1-125-838-91	CERAMIC CHIP	2.2uF	10%	6.3V
C2119	1-125-838-91	CERAMIC CHIP	2.2uF	10%	6.3V
C2120	1-125-838-91	CERAMIC CHIP	2.2uF	10%	6.3V
C2123	1-107-687-11	TANTAL. CHIP	3.3uF	20%	20V
C2124	1-164-943-11	CERAMIC CHIP	0.01uF	10%	16V
C2125	1-163-021-91	CERAMIC CHIP	0.01uF	10%	50V
C2126	1-115-566-11	CERAMIC CHIP	4.7uF	10%	10V
C2127	1-125-777-11	CERAMIC CHIP	0.1uF	10%	10V
C2128	1-107-725-11	CERAMIC CHIP	0.1uF	10%	16V
C2129	1-216-295-91	SHORT	0		(Note)
C2130	1-164-943-11	CERAMIC CHIP	0.01uF	10%	16V
C2133	1-109-982-11	CERAMIC CHIP	1uF	10%	10V
C2181	1-119-751-11	TANTAL. CHIP	22uF	20%	16V
C2182	1-164-943-11	CERAMIC CHIP	0.01uF	10%	16V

Note : Resistors is mounted to the location where C2129 is printed.

Ref. No.	Part No.	Description			Remarks
C2183	1-119-751-11	TANTAL. CHIP	22uF	20%	16V
C2184	1-164-943-11	CERAMIC CHIP	0.01uF	10%	16V
C2185	1-117-919-11	TANTAL. CHIP	10uF	20%	6.3V
C2186	1-125-777-11	CERAMIC CHIP	0.1uF	10%	10V
		< CONNECTOR >			
CN2100	1-794-378-21	PIN, CONNECTOR 14P			
CN2101	1-794-377-21	PIN, CONNECTOR 8P			
* CN2103	1-778-155-11	CONNECTOR, FFC/FPC (ZIF) 7P			
* CN2104	1-778-172-11	CONNECTOR, FFC/FPC (ZIF) 24P			
CN2105	1-764-704-21	CONNECTOR, FFC/FPC (LIF) 5P			
		< DIODE >			
D2101	8-719-073-01	DIODE MA111-TX			
D2102	8-713-102-80	DIODE 1T369-01-T8A			
D2104	8-719-050-42	DIODE RD3.3UM-T1B			
D2181	8-719-059-47	DIODE PG1111R-TR			
		< IC >			
IC2101	8-759-660-93	IC RB5P004AM1			
IC2103	8-752-403-84	IC CXD3505R-T4			
		< COIL >			
L2101	1-414-755-11	INDUCTOR	22uH		
L2102	1-414-754-11	INDUCTOR	10uH		
L2103	1-414-754-11	INDUCTOR	10uH		
L2104	1-410-998-31	INDUCTOR	2.7uH		
L2181	1-412-056-11	INDUCTOR	4.7uH		
L2182	1-414-757-11	INDUCTOR	100uH		
		< TRANSISTOR >			
Q2101	8-729-427-74	TRANSISTOR	XP4601-TXE		
Q2102	8-729-037-74	TRANSISTOR	UN9213J-(TX).SO		
Q2103	8-729-427-74	TRANSISTOR	XP4601-TXE		
Q2104	8-729-041-23	TRANSISTOR	NDS356AP		
Q2109	8-729-037-53	TRANSISTOR	2SB1462J-QR(K8).SO		
Q2111	8-729-037-52	TRANSISTOR	2SD2216J-QR(K8).SO		
Q2112	8-729-048-77	TRANSISTOR	XP4313-(TX).SO		
Q2181	8-729-042-72	TRANSISTOR	UN9214J-(K8).SO		
Q2182	8-729-037-53	TRANSISTOR	2SA1832F-Y/GR(TPL3)		
Q2183	8-729-042-59	TRANSISTOR	UN9112J-(K8).SO		
		< RESISTOR >			
R2111	1-218-985-11	RES-CHIP	470K	5%	1/16W
R2112	1-218-985-11	RES-CHIP	470K	5%	1/16W
R2113	1-218-990-11	SHORT	0		
R2114	1-218-967-11	RES-CHIP	15K	5%	1/16W
R2115	1-218-958-11	RES-CHIP	2.7K	5%	1/16W
R2116	1-218-973-11	RES-CHIP	47K	5%	1/16W
R2117	1-218-975-11	RES-CHIP	68K	5%	1/16W
R2118	1-218-969-11	RES-CHIP	22K	5%	1/16W
R2119	1-218-975-11	RES-CHIP	68K	5%	1/16W
R2122	1-218-989-11	RES-CHIP	1M	5%	1/16W
R2123	1-218-990-11	SHORT	0		
R2124	1-218-977-11	RES-CHIP	100K	5%	1/16W
R2129	1-218-990-11	SHORT	0		
R2134	1-218-929-11	RES-CHIP	10	5%	1/16W
R2136	1-218-929-11	RES-CHIP	10	5%	1/16W

Ref. No.	Part No.	Description			Remarks
R2137	1-218-929-11	RES-CHIP	10	5%	1/16W
R2138	1-218-941-11	RES-CHIP	100	5%	1/16W
R2143	1-218-965-11	RES-CHIP	10K	5%	1/16W
R2144	1-218-985-11	RES-CHIP	470K	5%	1/16W
R2146	1-218-990-11	SHORT	0		
R2147	1-218-990-11	SHORT	0		
R2148	1-218-965-11	RES-CHIP	10K	5%	1/16W
R2153	1-218-990-11	SHORT	0		
R2157	1-218-989-11	RES-CHIP	1M	5%	1/16W
R2158	1-218-975-11	RES-CHIP	68K	5%	1/16W
R2159	1-218-979-11	RES-CHIP	150K	5%	1/16W
R2160	1-218-988-11	RES-CHIP	820K	5%	1/16W
R2162	1-218-990-11	SHORT	0		
R2163	1-218-990-11	SHORT	0		
R2165	1-218-990-11	SHORT	0		
R2166	1-218-965-11	RES-CHIP	10K	5%	1/16W
R2168	1-218-990-11	SHORT	0		
R2169	1-218-990-11	SHORT	0		
R2170	1-218-977-11	RES-CHIP	100K	5%	1/16W
R2172	1-218-990-11	SHORT	0		
R2173	1-218-990-11	SHORT	0		
R2174	1-218-990-11	SHORT	0		
R2175	1-218-990-11	SHORT	0		
R2176	1-218-990-11	SHORT	0		
R2177	1-218-977-11	RES-CHIP	100K	5%	1/16W
R2178	1-218-977-11	RES-CHIP	100K	5%	1/16W
R2179	1-218-977-11	RES-CHIP	100K	5%	1/16W
R2180	1-218-977-11	RES-CHIP	100K	5%	1/16W
R2181	1-218-961-11	RES-CHIP	4.7K	5%	1/16W
R2182	1-218-953-11	RES-CHIP	1K	5%	1/16W
R2183	1-218-941-11	RES-CHIP	100	5%	1/16W
R2184	1-218-990-11	SHORT	0		

	A-7074-399-A	SE-108 BOARD, COMPLETE			
		**********			
					(Ref.No.;1000Series)
		< CAPACITOR >			
C600	1-125-777-11	CERAMIC CHIP	0.1uF	10%	10V
C601	1-127-895-91	TANTAL. CHIP	22uF	20%	4V
		< CONNECTOR >			
CN600	1-766-336-21	CONNECTOR, FFC/FPC 6P			
		< COIL >			
L600	1-414-754-11	INDUCTOR	10uH		
		< SENSOR >			
SE600	1-803-042-31	SENSOR, ANGULAR VELOCITY (YAW)			
SE601	1-803-042-41	SENSOR, ANGULAR VELOCITY (PITCH)			

Ref. No.	Part No.	Description			Remarks
	A-7096-243-A	VC-242D BOARD, COMPLETE (SERVICE)			
		**********			
					(Ref.No.;10000Series)
		< CAPACITOR >			
C102	1-164-943-11	CERAMIC CHIP	0.01uF	10%	16V
C103	1-164-943-11	CERAMIC CHIP	0.01uF	10%	16V
C104	1-125-777-11	CERAMIC CHIP	0.1uF	10%	10V
C105	1-109-982-11	CERAMIC CHIP	1uF	10%	10V
C106	1-164-943-11	CERAMIC CHIP	0.01uF	10%	16V
C107	1-127-895-95	TANTAL. CHIP	22uF	10%	4V
C108	1-164-943-11	CERAMIC CHIP	0.01uF	10%	16V
C109	1-117-919-11	TANTAL. CHIP	10uF	20%	6.3V
C110	1-164-943-11	CERAMIC CHIP	0.01uF	10%	16V
C111	1-164-935-11	CERAMIC CHIP	470PF	10%	16V
C112	1-164-943-11	CERAMIC CHIP	0.01uF	10%	16V
C113	1-164-866-11	CERAMIC CHIP	47PF	5%	16V
C114	1-125-777-11	CERAMIC CHIP	0.1uF	10%	10V
C115	1-164-935-11	CERAMIC CHIP	470PF	10%	16V
C116	1-164-677-11	CERAMIC CHIP	0.033uF	10%	16V
C117	1-164-943-11	CERAMIC CHIP	0.01uF	10%	16V
C118	1-164-866-11	CERAMIC CHIP	47PF	5%	16V
C119	1-164-943-11	CERAMIC CHIP	0.01uF	10%	16V
C120	1-164-943-11	CERAMIC CHIP	0.01uF	10%	16V
C121	1-125-777-11	CERAMIC CHIP	0.1uF	10%	10V
C122	1-125-777-11	CERAMIC CHIP	0.1uF	10%	10V
C123	1-164-943-11	CERAMIC CHIP	0.01uF	10%	16V
C124	1-164-943-11	CERAMIC CHIP	0.01uF	10%	16V
C125	1-164-943-11	CERAMIC CHIP	0.01uF	10%	16V
C127	1-125-777-11	CERAMIC CHIP	0.1uF	10%	10V
C128	1-125-777-11	CERAMIC CHIP	0.1uF	10%	10V
C301	1-107-826-91	CERAMIC CHIP	0.1uF	10%	16V
C302	1-107-826-91	CERAMIC CHIP	0.1uF	10%	16V
C303	1-107-826-91	CERAMIC CHIP	0.1uF	10%	16V
C304	1-107-826-91	CERAMIC CHIP	0.1uF	10%	16V
C305	1-107-826-91	CERAMIC CHIP	0.1uF	10%	16V
C306	1-164-943-11	CERAMIC CHIP	0.01uF	10%	16V
C307	1-164-850-11	CERAMIC CHIP	10PF	0.50PF	16V
C308	1-164-850-11	CERAMIC CHIP	10PF	0.50PF	16V
C309	1-164-943-11	CERAMIC CHIP	0.01uF	10%	16V
C310	1-127-760-91	CERAMIC CHIP	4.7uF	10%	6.3V
C311	1-164-943-11	CERAMIC CHIP	0.01uF	10%	16V
C312	1-164-943-11	CERAMIC CHIP	0.01uF	10%	16V
C313	1-164-937-11	CERAMIC CHIP	0.001uF	10%	16V
C314	1-164-937-11	CERAMIC CHIP	0.001uF	10%	16V
C315	1-164-937-11	CERAMIC CHIP	0.001uF	10%	16V
C316	1-164-937-11	CERAMIC CHIP	0.001uF	10%	16V
C317	1-164-943-11	CERAMIC CHIP	0.01uF	10%	16V
C318	1-164-943-11	CERAMIC CHIP	0.01uF	10%	16V
C319	1-164-937-11	CERAMIC CHIP	0.001uF	10%	16V
C320	1-117-919-11	TANTAL. CHIP	10uF	20%	6.3V
C321	1-164-943-11	CERAMIC CHIP	0.01uF	10%	16V
C322	1-117-863-11	CERAMIC CHIP	0.47uF	10%	6.3V
C323	1-164-943-11	CERAMIC CHIP	0.01uF	10%	16V
C324	1-119-923-81	CERAMIC CHIP	0.047uF	10%	10V
C325	1-164-937-11	CERAMIC CHIP	0.001uF	10%	16V
C326	1-125-838-91	CERAMIC CHIP	2.2uF	10%	6.3V
C327	1-127-895-91	TANTAL. CHIP	22uF	20%	4V
C328	1-164-943-11	CERAMIC CHIP	0.01uF	10%	16V
C329	1-164-943-11	CERAMIC CHIP	0.01uF	10%	16V
C331	1-117-919-11	TANTAL. CHIP	10uF	20%	6.3V
C332	1-164-943-11	CERAMIC CHIP	0.01uF	10%	16V
C333	1-162-970-11	CERAMIC CHIP	0.01uF	10%	25V
C334	1-164-943-11	CERAMIC CHIP	0.01uF	10%	16V
C335	1-107-826-91	CERAMIC CHIP	0.1uF	10%	16V
C337	1-125-837-91	CERAMIC CHIP	1uF	10%	6.3V
C338	1-164-882-11	CERAMIC CHIP	220PF	5%	16V
C341	1-125-837-91	CERAMIC CHIP	1uF	10%	6.3V
C342	1-125-837-91	CERAMIC CHIP	1uF	10%	6.3V
C343	1-127-760-91	CERAMIC CHIP	4.7uF	10%	6.3V
C345	1-127-760-91	CERAMIC CHIP	4.7uF	10%	6.3V
C346	1-127-760-91	CERAMIC CHIP	4.7uF	10%	6.3V
C348	1-127-760-91	CERAMIC CHIP	4.7uF	10%	6.3V
C352	1-164-943-11	CERAMIC CHIP	0.01uF	10%	16V
C353	1-125-837-91	CERAMIC CHIP	1uF	10%	6.3V
C401	1-164-937-11	CERAMIC CHIP	0.001uF	10%	16V
C402	1-164-937-11	CERAMIC CHIP	0.001uF	10%	16V
C403	1-164-943-11	CERAMIC CHIP	0.01uF	10%	16V
C404	1-119-923-81	CERAMIC CHIP	0.047uF	10%	10V
C405	1-119-923-81	CERAMIC CHIP	0.047uF	10%	10V
C406	1-164-505-11	CERAMIC CHIP	2.2uF		16V
C407	1-125-777-11	CERAMIC CHIP	0.1uF	10%	10V
C408	1-107-819-11	CERAMIC CHIP	0.022uF	10%	16V
C409	1-164-942-11	CERAMIC CHIP	0.0068uF	10%	16V
C410	1-107-819-11	CERAMIC CHIP	0.022uF	10%	16V
C411	1-107-820-11	CERAMIC CHIP	0.1uF		16V
C414	1-164-935-11	CERAMIC CHIP	470PF	10%	16V
C415	1-164-935-11	CERAMIC CHIP	470PF	10%	16V
C416	1-125-837-91	CERAMIC CHIP	1uF	10%	6.3V
C418	1-164-935-11	CERAMIC CHIP	470PF	10%	16V
C419	1-164-935-11	CERAMIC CHIP	470PF	10%	16V
C420	1-125-777-11	CERAMIC CHIP	0.1uF	10%	10V
C421	1-125-777-11	CERAMIC CHIP	0.1uF	10%	10V
C422	1-125-777-11	CERAMIC CHIP	0.1uF	10%	10V
C423	1-125-777-11	CERAMIC CHIP	0.1uF	10%	10V
C424	1-125-777-11	CERAMIC CHIP	0.1uF	10%	10V
C425	1-119-923-81	CERAMIC CHIP	0.047uF	10%	10V
C426	1-127-578-91	TANTAL. CHIP	3.3uF	20%	6.3V
C427	1-125-777-11	CERAMIC CHIP	0.1uF	10%	10V
C428	1-125-777-11	CERAMIC CHIP	0.1uF	10%	10V
C429	1-164-941-11	CERAMIC CHIP	0.0047uF	10%	16V
C430	1-164-941-11	CERAMIC CHIP	0.0047uF	10%	16V
C431	1-125-777-11	CERAMIC CHIP	0.1uF	10%	10V
C432	1-125-777-11	CERAMIC CHIP	0.1uF	10%	10V
C433	1-125-777-11	CERAMIC CHIP	0.1uF	10%	10V
C434	1-125-777-11	CERAMIC CHIP	0.1uF	10%	10V
C435	1-107-823-11	CERAMIC CHIP	0.47uF	10%	16V
C436	1-125-777-11	CERAMIC CHIP	0.1uF	10%	10V
C437	1-115-467-11	CERAMIC CHIP	0.22uF	10%	10V
C438	1-125-777-11	CERAMIC CHIP	0.1uF	10%	10V
C501	1-164-937-11	CERAMIC CHIP	0.001uF	10%	16V
C502	1-164-850-11	CERAMIC CHIP	10PF	0.50PF	16V
C503	1-164-850-11	CERAMIC CHIP	10PF	0.50PF	16V
C504	1-125-777-11	CERAMIC CHIP	0.1uF	10%	10V
C505	1-164-943-11	CERAMIC CHIP	0.01uF	10%	16V
C506	1-164-943-11	CERAMIC CHIP	0.01uF	10%	16V
C507	1-164-943-11	CERAMIC CHIP	0.01uF	10%	16V
C508	1-117-919-11	TANTAL. CHIP	10uF	20%	6.3V
C509	1-109-982-11	CERAMIC CHIP	1uF	10%	10V
C701	1-107-689-21	TANTAL. CHIP	1uF	20%	35V

Ref. No.	Part No.	Description			Remarks
C702	1-107-689-21	TANTAL. CHIP	1uF	20%	35V
C703	1-113-682-11	TANTAL. CHIP	33uF	20%	10V
C704	1-125-777-11	CERAMIC CHIP	0.1uF	10%	10V
C705	1-113-682-11	TANTAL. CHIP	33uF	20%	10V
C706	1-125-837-91	CERAMIC CHIP	1uF	10%	6.3V
C707	1-125-837-91	CERAMIC CHIP	1uF	10%	6.3V
C708	1-125-837-91	CERAMIC CHIP	1uF	10%	6.3V
C709	1-125-837-91	CERAMIC CHIP	1uF	10%	6.3V
C710	1-125-837-91	CERAMIC CHIP	1uF	10%	6.3V
C711	1-125-837-91	CERAMIC CHIP	1uF	10%	6.3V
C712	1-125-837-91	CERAMIC CHIP	1uF	10%	6.3V
C713	1-125-777-11	CERAMIC CHIP	0.1uF	10%	10V
C714	1-125-777-11	CERAMIC CHIP	0.1uF	10%	10V
C715	1-125-777-11	CERAMIC CHIP	0.1uF	10%	10V
C716	1-107-826-91	CERAMIC CHIP	0.1uF	10%	16V
C717	1-119-751-11	TANTAL. CHIP	22uF	20%	16V
C719	1-125-777-11	CERAMIC CHIP	0.1uF	10%	10V
C720	1-125-837-91	CERAMIC CHIP	1uF	10%	6.3V
C721	1-125-777-11	CERAMIC CHIP	0.1uF	10%	10V
C722	1-125-777-11	CERAMIC CHIP	0.1uF	10%	10V
C723	1-125-777-11	CERAMIC CHIP	0.1uF	10%	10V
C724	1-125-777-11	CERAMIC CHIP	0.1uF	10%	10V
C725	1-125-777-11	CERAMIC CHIP	0.1uF	10%	10V
C726	1-125-777-11	CERAMIC CHIP	0.1uF	10%	10V
C727	1-125-777-11	CERAMIC CHIP	0.1uF	10%	10V
C728	1-125-777-11	CERAMIC CHIP	0.1uF	10%	10V
C731	1-125-777-11	CERAMIC CHIP	0.1uF	10%	10V
C732	1-125-777-11	CERAMIC CHIP	0.1uF	10%	10V
C733	1-125-777-11	CERAMIC CHIP	0.1uF	10%	10V
C734	1-125-777-11	CERAMIC CHIP	0.1uF	10%	10V
C735	1-164-850-11	CERAMIC CHIP	10PF	0.50PF	16V
C736	1-164-850-11	CERAMIC CHIP	10PF	0.50PF	16V
C737	1-164-850-11	CERAMIC CHIP	10PF	0.50PF	16V
C738	1-125-777-11	CERAMIC CHIP	0.1uF	10%	10V
C739	1-119-749-11	TANTAL. CHIP	33uF	20%	4V
C742	1-125-777-11	CERAMIC CHIP	0.1uF	10%	10V
C745	1-164-937-11	CERAMIC CHIP	0.001uF	10%	16V
C746	1-164-937-11	CERAMIC CHIP	0.001uF	10%	16V
C747	1-164-852-11	CERAMIC CHIP	12PF	5%	16V
C748	1-125-777-11	CERAMIC CHIP	0.1uF	10%	10V
C749	1-125-777-11	CERAMIC CHIP	0.1uF	10%	10V
C750	1-125-837-91	CERAMIC CHIP	1uF	10%	6.3V
C751	1-125-837-91	CERAMIC CHIP	1uF	10%	6.3V
C752	1-125-837-91	CERAMIC CHIP	1uF	10%	6.3V
C753	1-128-964-91	TANTAL. CHIP	100uF	20%	6.3V
C754	1-125-777-11	CERAMIC CHIP	0.1uF	10%	10V
C756	1-125-837-91	CERAMIC CHIP	1uF	10%	6.3V
C757	1-127-895-91	TANTAL. CHIP	22uF	20%	4V
C758	1-125-777-11	CERAMIC CHIP	0.1uF	10%	10V
C759	1-125-777-11	CERAMIC CHIP	0.1uF	10%	10V
C760	1-125-777-11	CERAMIC CHIP	0.1uF	10%	10V
C761	1-107-826-91	CERAMIC CHIP	0.1uF	10%	16V
C762	1-125-837-91	CERAMIC CHIP	1uF	10%	6.3V
C763	1-125-777-11	CERAMIC CHIP	0.1uF	10%	10V
C764	1-125-777-11	CERAMIC CHIP	0.1uF	10%	10V
C765	1-164-848-11	CERAMIC CHIP	8PF	0.50PF	16V
C767	1-164-843-11	CERAMIC CHIP	3PF	0.25PF	16V
C771	1-125-837-91	CERAMIC CHIP	1uF	10%	6.3V
C772	1-125-777-11	CERAMIC CHIP	0.1uF	10%	10V
C801	1-127-895-95	TANTAL. CHIP	22uF	10%	4V

Ref. No.	Part No.	Description			Remarks
C802	1-125-777-11	CERAMIC CHIP	0.1uF	10%	10V
C803	1-125-777-11	CERAMIC CHIP	0.1uF	10%	10V
C805	1-164-943-11	CERAMIC CHIP	0.01uF	10%	16V
C806	1-125-777-11	CERAMIC CHIP	0.1uF	10%	10V
C807	1-125-777-11	CERAMIC CHIP	0.1uF	10%	10V
C808	1-164-943-11	CERAMIC CHIP	0.01uF	10%	16V
C809	1-125-777-11	CERAMIC CHIP	0.1uF	10%	10V
C810	1-127-895-95	TANTAL. CHIP	22uF	10%	4V
C811	1-125-777-11	CERAMIC CHIP	0.1uF	10%	10V
C901	1-117-919-11	TANTAL. CHIP	10uF	20%	6.3V
C902	1-164-943-11	CERAMIC CHIP	0.01uF	10%	16V
C903	1-164-943-11	CERAMIC CHIP	0.01uF	10%	16V
C904	1-104-851-11	TANTAL. CHIP	10uF	20%	10V
C908	1-125-777-11	CERAMIC CHIP	0.1uF	10%	10V
C910	1-117-919-11	TANTAL. CHIP	10uF	20%	6.3V
C911	1-125-837-91	CERAMIC CHIP	1uF	10%	6.3V
C912	1-125-837-91	CERAMIC CHIP	1uF	10%	6.3V
C913	1-164-943-11	CERAMIC CHIP	0.01uF	10%	16V
C914	1-125-837-91	CERAMIC CHIP	1uF	10%	6.3V
C915	1-164-943-11	CERAMIC CHIP	0.01uF	10%	16V
C916	1-125-837-91	CERAMIC CHIP	1uF	10%	6.3V
C917	1-125-837-91	CERAMIC CHIP	1uF	10%	6.3V
C918	1-125-837-91	CERAMIC CHIP	1uF	10%	6.3V
C919	1-164-943-11	CERAMIC CHIP	0.01uF	10%	16V
C920	1-164-943-11	CERAMIC CHIP	0.01uF	10%	16V
C921	1-164-943-11	CERAMIC CHIP	0.01uF	10%	16V
C922	1-125-837-91	CERAMIC CHIP	1uF	10%	6.3V
C926	1-107-826-91	CERAMIC CHIP	0.1uF	10%	16V
C928	1-164-943-11	CERAMIC CHIP	0.01uF	10%	16V
C929	1-125-777-11	CERAMIC CHIP	0.1uF	10%	10V
C930	1-125-777-11	CERAMIC CHIP	0.1uF	10%	10V
C931	1-125-777-11	CERAMIC CHIP	0.1uF	10%	10V
C932	1-164-943-11	CERAMIC CHIP	0.01uF	10%	16V
C933	1-117-919-11	TANTAL. CHIP	10uF	20%	6.3V
C934	1-125-777-11	CERAMIC CHIP	0.1uF	10%	10V
C935	1-164-858-11	CERAMIC CHIP	22PF	5%	16V
C936	1-164-866-11	CERAMIC CHIP	47PF	5%	16V
C1002	1-104-851-11	TANTAL. CHIP	10uF	20%	10V
C1003	1-117-863-11	CERAMIC CHIP	0.47uF	10%	6.3V
C1005	1-110-569-11	TANTAL. CHIP	47uF	20%	6.3V
C1006	1-110-569-11	TANTAL. CHIP	47uF	20%	6.3V
C1007	1-104-851-11	TANTAL. CHIP	10uF	20%	10V
C1008	1-135-149-21	TANTALUM CHIP	2.2uF	20%	10V
C1009	1-135-259-11	TANTAL. CHIP	10uF	20%	6.3V
C1010	1-117-919-11	TANTAL. CHIP	10uF	20%	6.3V
C1011	1-117-863-11	CERAMIC CHIP	0.47uF	10%	6.3V
C1013	1-117-919-11	TANTAL. CHIP	10uF	20%	6.3V
C1014	1-131-623-91	TANTAL. CHIP	15uF	20%	4V
C1015	1-164-943-11	CERAMIC CHIP	0.01uF	10%	16V
C1016	1-164-943-11	CERAMIC CHIP	0.01uF	10%	16V
C1017	1-117-919-11	TANTAL. CHIP	10uF	20%	6.3V
C1018	1-125-777-11	CERAMIC CHIP	0.1uF	10%	10V
C1019	1-125-777-11	CERAMIC CHIP	0.1uF	10%	10V
C1020	1-117-863-11	CERAMIC CHIP	0.47uF	10%	6.3V
C1021	1-117-919-11	TANTAL. CHIP	10uF	20%	6.3V
C1022	1-117-863-11	CERAMIC CHIP	0.47uF	10%	6.3V
C1023	1-117-863-11	CERAMIC CHIP	0.47uF	10%	6.3V
C1024	1-117-919-11	TANTAL. CHIP	10uF	20%	6.3V
C1026	1-117-863-11	CERAMIC CHIP	0.47uF	10%	6.3V
C1027	1-125-837-91	CERAMIC CHIP	1uF	10%	6.3V

Ref. No.	Part No.	Description			Remarks
C1029	1-125-837-91	CERAMIC CHIP	1uF	10%	6.3V
C1030	1-119-749-11	TANTAL. CHIP	33uF	20%	4V
C1031	1-125-837-91	CERAMIC CHIP	1uF	10%	6.3V
C1034	1-117-720-11	CERAMIC CHIP	4.7uF		10V
C1035	1-125-837-91	CERAMIC CHIP	1uF	10%	6.3V
C1036	1-117-919-11	TANTAL. CHIP	10uF	20%	6.3V
C1037	1-117-919-11	TANTAL. CHIP	10uF	20%	6.3V
C1038	1-164-943-11	CERAMIC CHIP	0.01uF	10%	16V
C1039	1-104-851-11	TANTAL. CHIP	10uF	20%	10V
C1040	1-117-919-11	TANTAL. CHIP	10uF	20%	6.3V
C1041	1-125-837-91	CERAMIC CHIP	1uF	10%	6.3V
C1042	1-117-863-11	CERAMIC CHIP	0.47uF	10%	6.3V
C1044	1-104-851-11	TANTAL. CHIP	10uF	20%	10V
C1045	1-104-851-11	TANTAL. CHIP	10uF	20%	10V
C1046	1-125-837-91	CERAMIC CHIP	1uF	10%	6.3V
C1047	1-164-942-11	CERAMIC CHIP	0.0068uF	10%	16V
C1048	1-125-837-91	CERAMIC CHIP	1uF	10%	6.3V
C1049	1-117-863-11	CERAMIC CHIP	0.47uF	10%	6.3V
C1050	1-117-863-11	CERAMIC CHIP	0.47uF	10%	6.3V
C1051	1-117-919-11	TANTAL. CHIP	10uF	20%	6.3V
C1052	1-135-149-21	TANTALUM CHIP	2.2uF	20%	10V
C1053	1-135-259-11	TANTAL. CHIP	10uF	20%	6.3V
C1054	1-117-919-11	TANTAL. CHIP	10uF	20%	6.3V
C1055	1-117-863-11	CERAMIC CHIP	0.47uF	10%	6.3V
C1056	1-117-919-11	TANTAL. CHIP	10uF	20%	6.3V
C1058	1-117-863-11	CERAMIC CHIP	0.47uF	10%	6.3V
C1059	1-125-837-91	CERAMIC CHIP	1uF	10%	6.3V
C1060	1-117-919-11	TANTAL. CHIP	10uF	20%	6.3V
C1061	1-117-863-11	CERAMIC CHIP	0.47uF	10%	6.3V
C1062	1-117-919-11	TANTAL. CHIP	10uF	20%	6.3V
C1065	1-125-777-11	CERAMIC CHIP	0.1uF	10%	10V
C1066	1-125-777-11	CERAMIC CHIP	0.1uF	10%	10V
C1067	1-164-943-11	CERAMIC CHIP	0.01uF	10%	16V
C1068	1-125-837-91	CERAMIC CHIP	1uF	10%	6.3V
C1070	1-125-777-11	CERAMIC CHIP	0.1uF	10%	10V
C1071	1-125-837-91	CERAMIC CHIP	1uF	10%	6.3V
C1072	1-119-750-11	TANTAL. CHIP	22uF	20%	6.3V
C1073	1-119-750-11	TANTAL. CHIP	22uF	20%	6.3V
C1074	1-125-777-11	CERAMIC CHIP	0.1uF	10%	10V
C1075	1-117-919-11	TANTAL. CHIP	10uF	20%	6.3V
C1076	1-117-919-11	TANTAL. CHIP	10uF	20%	6.3V
C1077	1-164-942-11	CERAMIC CHIP	0.0068uF	10%	16V
C1078	1-125-837-91	CERAMIC CHIP	1uF	10%	6.3V
C1079	1-125-837-91	CERAMIC CHIP	1uF	10%	6.3V
C1090	1-164-935-11	CERAMIC CHIP	470PF	10%	16V
C1091	1-164-935-11	CERAMIC CHIP	470PF	10%	16V
C1101	1-125-777-11	CERAMIC CHIP	0.1uF	10%	10V
C1102	1-115-156-11	CERAMIC CHIP	1uF		10V
C1103	1-109-982-11	CERAMIC CHIP	1uF	10%	10V
C1104	1-164-943-11	CERAMIC CHIP	0.01uF	10%	16V
C1105	1-125-777-11	CERAMIC CHIP	0.1uF	10%	10V
C1106	1-104-851-11	TANTAL. CHIP	10uF	20%	10V
C1107	1-119-749-11	TANTAL. CHIP	33uF	20%	4V
C1108	1-164-943-11	CERAMIC CHIP	0.01uF	10%	16V
C1109	1-164-943-11	CERAMIC CHIP	0.01uF	10%	16V
C1110	1-164-943-11	CERAMIC CHIP	0.01uF	10%	16V
C1111	1-164-943-11	CERAMIC CHIP	0.01uF	10%	16V
C1112	1-164-943-11	CERAMIC CHIP	0.01uF	10%	16V
C1113	1-164-943-11	CERAMIC CHIP	0.01uF	10%	16V
C1114	1-164-943-11	CERAMIC CHIP	0.01uF	10%	16V

Ref. No.	Part No.	Description			Remarks
C1115	1-164-943-11	CERAMIC CHIP	0.01uF	10%	16V
C1116	1-164-943-11	CERAMIC CHIP	0.01uF	10%	16V
C1117	1-164-943-11	CERAMIC CHIP	0.01uF	10%	16V
C1118	1-164-943-11	CERAMIC CHIP	0.01uF	10%	16V
C1119	1-164-943-11	CERAMIC CHIP	0.01uF	10%	16V
C1120	1-107-819-11	CERAMIC CHIP	0.022uF	10%	16V
C1121	1-164-943-11	CERAMIC CHIP	0.01uF	10%	16V
C1122	1-164-943-11	CERAMIC CHIP	0.01uF	10%	16V
C1127	1-164-942-11	CERAMIC CHIP	0.0068uF	10%	16V
C1128	1-164-852-11	CERAMIC CHIP	12PF	5%	16V
C1129	1-164-852-11	CERAMIC CHIP	12PF	5%	16V
C1130	1-125-777-11	CERAMIC CHIP	0.1uF	10%	10V
C1131	1-164-943-11	CERAMIC CHIP	0.01uF	10%	16V
C1132	1-164-943-11	CERAMIC CHIP	0.01uF	10%	16V
C1301	1-164-943-11	CERAMIC CHIP	0.01uF	10%	16V
C1304	1-115-467-11	CERAMIC CHIP	0.22uF	10%	10V
C1305	1-125-837-91	CERAMIC CHIP	1uF	10%	6.3V
C1306	1-125-837-91	CERAMIC CHIP	1uF	10%	6.3V
C1307	1-164-943-11	CERAMIC CHIP	0.01uF	10%	16V
C1308	1-125-838-91	CERAMIC CHIP	2.2uF	10%	6.3V
C1309	1-164-677-11	CERAMIC CHIP	0.033uF	10%	16V
C1310	1-125-838-91	CERAMIC CHIP	2.2uF	10%	6.3V
C1311	1-125-838-91	CERAMIC CHIP	2.2uF	10%	6.3V
C1312	1-125-837-91	CERAMIC CHIP	1uF	10%	6.3V
C1313	1-117-919-11	TANTAL. CHIP	10uF	20%	6.3V
C1314	1-125-837-91	CERAMIC CHIP	1uF	10%	6.3V
C1315	1-164-943-11	CERAMIC CHIP	0.01uF	10%	16V
C1316	1-125-837-91	CERAMIC CHIP	1uF	10%	6.3V
C1318	1-125-837-91	CERAMIC CHIP	1uF	10%	6.3V
C1319	1-164-217-11	CERAMIC CHIP	150PF	5%	50V
C1320	1-164-937-11	CERAMIC CHIP	0.001uF	10%	16V
C1321	1-164-943-11	CERAMIC CHIP	0.01uF	10%	16V
C1322	1-125-777-11	CERAMIC CHIP	0.1uF	10%	10V
C1328	1-164-943-11	CERAMIC CHIP	0.01uF	10%	16V
C1329	1-164-943-11	CERAMIC CHIP	0.01uF	10%	16V
C1330	1-127-569-91	TANTAL. CHIP	100uF	20%	4V
C1332	1-104-851-11	TANTAL. CHIP	10uF	20%	10V
C1337	1-125-838-91	CERAMIC CHIP	2.2uF	10%	6.3V
C1338	1-125-838-91	CERAMIC CHIP	2.2uF	10%	6.3V
C1340	1-127-569-91	TANTAL. CHIP	100uF	20%	4V
C1341	1-127-569-91	TANTAL. CHIP	100uF	20%	4V
C1342	1-127-569-91	TANTAL. CHIP	100uF	20%	4V
C1343	1-164-858-11	CERAMIC CHIP	22PF	5%	16V
C1401	1-125-777-11	CERAMIC CHIP	0.1uF	10%	10V
C1402	1-125-837-91	CERAMIC CHIP	1uF	10%	6.3V
C1403	1-125-837-91	CERAMIC CHIP	1uF	10%	6.3V
C1404	1-125-837-91	CERAMIC CHIP	1uF	10%	6.3V
C1405	1-125-837-91	CERAMIC CHIP	1uF	10%	6.3V
C1406	1-125-837-91	CERAMIC CHIP	1uF	10%	6.3V
C1407	1-125-777-11	CERAMIC CHIP	0.1uF	10%	10V
C1408	1-117-919-11	TANTAL. CHIP	10uF	20%	6.3V
C1409	1-164-360-11	CERAMIC CHIP	0.1uF		16V
C1410	1-164-315-11	CERAMIC CHIP	470PF	2.00%	50V
C1411	1-125-777-11	CERAMIC CHIP	0.1uF	10%	10V
C1412	1-117-919-11	TANTAL. CHIP	10uF	20%	6.3V
C1413	1-125-777-11	CERAMIC CHIP	0.1uF	10%	10V
C1414	1-164-360-11	CERAMIC CHIP	0.1uF		16V
C1415	1-125-777-11	CERAMIC CHIP	0.1uF	10%	10V
C1416	1-117-919-11	TANTAL. CHIP	10uF	20%	6.3V
C1417	1-125-777-11	CERAMIC CHIP	0.1uF	10%	10V

Ref. No.	Part No.	Description			Remarks
C1418	1-117-919-11	TANTAL. CHIP	10uF	20%	6.3V
C1419	1-117-919-11	TANTAL. CHIP	10uF	20%	6.3V
C1420	1-164-850-11	CERAMIC CHIP	10PF	0.50PF	16V
C1421	1-164-850-11	CERAMIC CHIP	10PF	0.50PF	16V
C1422	1-125-777-11	CERAMIC CHIP	0.1uF	10%	10V
C1423	1-117-919-11	TANTAL. CHIP	10uF	20%	6.3V
C1424	1-164-943-11	CERAMIC CHIP	0.01uF	10%	16V
C1425	1-164-943-11	CERAMIC CHIP	0.01uF	10%	16V
C1426	1-125-777-11	CERAMIC CHIP	0.1uF	10%	10V
C1427	1-125-777-11	CERAMIC CHIP	0.1uF	10%	10V
C1428	1-117-919-11	TANTAL. CHIP	10uF	20%	6.3V
C1801	1-119-750-11	TANTAL. CHIP	22uF	20%	6.3V
C1802	1-125-777-11	CERAMIC CHIP	0.1uF	10%	10V
C1805	1-164-943-11	CERAMIC CHIP	0.01uF	10%	16V
C1806	1-164-943-11	CERAMIC CHIP	0.01uF	10%	16V
C1807	1-164-943-11	CERAMIC CHIP	0.01uF	10%	16V
C1808	1-125-777-11	CERAMIC CHIP	0.1uF	10%	10V
C1810	1-164-739-11	CERAMIC CHIP	560PF	5%	50V
C1811	1-125-777-11	CERAMIC CHIP	0.1uF	10%	10V
C1812	1-107-687-11	TANTAL. CHIP	3.3uF	20%	20V
C1813	1-164-357-11	CERAMIC CHIP	1000PF	5%	50V
C1814	1-107-826-91	CERAMIC CHIP	0.1uF	10%	16V
C1815	1-164-872-11	CERAMIC CHIP	82PF	5%	16V
C1816	1-125-777-11	CERAMIC CHIP	0.1uF	10%	10V
C1817	1-125-838-91	CERAMIC CHIP	2.2uF	10%	6.3V
C1818	1-125-838-91	CERAMIC CHIP	2.2uF	10%	6.3V
C1819	1-125-838-91	CERAMIC CHIP	2.2uF	10%	6.3V
C1820	1-125-777-11	CERAMIC CHIP	0.1uF	10%	10V
C1822	1-115-566-11	CERAMIC CHIP	4.7uF	10%	10V
C1823	1-164-505-11	CERAMIC CHIP	2.2uF		16V
C1824	1-162-970-11	CERAMIC CHIP	0.01uF	10%	25V
		< CONNECTOR >			
CN002	1-784-421-11	CONNECTOR, FFC/FPC (ZIF) 27P			
CN003	1-766-346-21	CONNECTOR, FFC/FPC 16P			
CN004	1-766-340-21	CONNECTOR, FFC/FPC 10P			
CN006	1-785-432-21	CONNECTOR, BOARD TO BOARD 40P			
CN007	1-766-350-21	CONNECTOR, FFC/FPC 20P			
CN008	1-766-884-41	CONNECTOR, BOARD TO BOARD 50P			
CN009	1-779-331-11	CONNECTOR, FFC/FPC 14P			
CN020	1-766-341-21	CONNECTOR, FFC/FPC 11P			
CN021	1-778-084-11	CONNECTOR, BOARD TO BOARD 60P			
CN022	1-784-421-11	CONNECTOR, FFC/FPC (ZIF) 27P			
CN023	1-778-086-21	CONNECTOR, BOARD TO BOARD 80P			
CN024	1-784-421-11	CONNECTOR, FFC/FPC (ZIF) 27P			
CN025	1-778-083-21	CONNECTOR, BOARD TO BOARD 50P			
CN101	1-766-340-21	CONNECTOR, FFC/FPC 10P			
		< DIODE >			
D001	8-719-064-61	DIODE 01BZA8.2(TE85L)			
D002	8-719-064-61	DIODE 01BZA8.2(TE85L)			
D003	8-719-064-61	DIODE 01BZA8.2(TE85L)			
D004	8-719-064-61	DIODE 01BZA8.2(TE85L)			
D005	8-719-064-61	DIODE 01BZA8.2(TE85L)			
D007	8-719-073-03	DIODE MA8082-(K8).S0			
D301	8-719-027-95	DIODE HSM88WK-TL			
D302	8-719-055-86	DIODE KV1470TL1-3			
D303	8-719-027-95	DIODE HSM88WK-TL			
D304	8-719-055-86	DIODE KV1470TL1-3			

Ref. No.	Part No.	Description		Remarks
D701	8-713-103-84	DIODE 1T379-01-T8A		
D702	8-719-046-91	DIODE MA2S111-TX		
D1102	8-719-073-01	DIODE MA111-(K8).S0		
D1103	8-719-073-01	DIODE MA111-(K8).S0		
D1104	8-719-421-27	DIODE MA728-(K8).S0		
D1105	8-719-073-01	DIODE MA111-(K8).S0		
D1106	8-719-073-01	DIODE MA111-(K8).S0		
D1110	8-719-421-27	DIODE MA728-(K8).S0		
D1111	8-719-421-27	DIODE MA728-(K8).S0		
D1112	8-719-056-23	DIODE MA2S111-(K8).SO		
D1113	8-719-422-70	DIODE MA8075-TX		
D1401	8-719-056-23	DIODE MA2S111-(K8).SO		
D1802	8-713-102-80	DIODE 1T369-01-T8A		
D1803	8-719-077-74	DIODE MA2S784008S0		
D1804	8-719-077-74	DIODE MA2S784008S0		
		< FERRITE BEAD >		
FB101	1-414-760-21	FERRITE	0UH	
FB301	1-414-760-21	FERRITE	0UH	
FB302	1-414-760-21	FERRITE	0UH	
FB303	1-414-760-21	FERRITE	0UH	
FB304	1-414-760-21	FERRITE	0UH	
FB305	1-414-760-21	FERRITE	0UH	
FB306	1-414-760-21	FERRITE	0UH	
FB307	1-414-760-21	FERRITE	0UH	
FB501	1-414-760-21	FERRITE	0UH	
FB702	1-414-445-11	FERRITE	0UH	
FB703	1-414-445-11	FERRITE	0UH	
FB704	1-414-445-11	FERRITE	0UH	
FB705	1-500-284-21	INDUCTOR CHIP	0UH	
FB706	1-414-445-11	FERRITE	0UH	
FB707	1-414-445-11	FERRITE	0UH	
FB771	1-414-445-11	FERRITE	0UH	
FB772	1-414-445-11	FERRITE	0UH	
FB901	1-414-760-21	FERRITE	0UH	
FB1002	1-500-329-21	INDUCTOR CHIP	0UH	
FB1101	1-500-329-21	INDUCTOR CHIP	0UH	
FB1301	1-414-760-21	FERRITE	0UH	
FB1401	1-543-955-22	FERRITE	0UH	
FB1402	1-543-955-22	FERRITE	0UH	
FB1403	1-543-960-22	FERRITE	0UH	
FB1404	1-543-955-22	FERRITE	0UH	
FB1405	1-543-955-22	FERRITE	0UH	
FB1406	1-543-955-22	FERRITE	0UH	
FB1407	1-543-955-22	FERRITE	0UH	
FB1408	1-500-284-21	INDUCTOR CHIP	0UH	
FB1409	1-500-284-21	INDUCTOR CHIP	0UH	
FB1801	1-414-760-21	FERRITE	0UH	
		< IC >		
IC101	8-752-086-52	IC CXA2071R-T4		
IC102	8-752-086-53	IC CXA2072R-T4		
IC301	8-759-650-63	IC CAIN-CSP		
IC302	8-759-677-31	IC MB90099PFV-G-103-BND-ER		
IC361	8-759-535-43	IC SN104266GGM-TEB		
IC401	8-759-652-08	IC CXA8099ER-TBM		
IC402	8-759-657-68	IC SC111319FTBEB		
IC501	8-759-679-39	IC MB91192LGA-G-113-ER		
IC502	8-759-593-47	IC AK6417AM-E2		
IC701	8-752-397-67	IC CXD3400N-T4		

Ref. No.	Part No.	Description	Remarks
IC702	8-752-397-67	IC CXD3400N-T4	
IC704	8-752-083-11	IC CXA2107R-T4	
IC705	8-752-403-85	IC CXD2484R-T4	
IC706	8-759-598-08	IC AK5483-L	
IC707	8-759-075-66	IC TA75S01F(TE85R)	
IC771	8-752-397-00	IC CXD3116AR-T6	
IC801	8-759-445-94	IC BR9080RFV-E2	
IC802	8-752-914-93	IC CXP972048-019R-T6	
IC803	8-759-426-25	IC MB88346LPFV-G-BND-ER	
IC903	8-759-653-60	IC MB87L1241PFV-G-BND-ER	
IC1001	8-759-684-40	IC LA74205FN-S-TBM	
IC1002	8-759-647-71	IC AK4550VT-E2	
IC1003	8-759-680-44	IC TLC2272CDR	
IC1004	8-759-684-40	IC LA74205FN-S-TBM	
IC1005	8-759-430-57	IC M62367GP-75ED	
IC1006	8-759-633-55	IC M5222FP-E1	
IC1007	8-759-633-55	IC M5222FP-E1	
IC1008	8-759-111-56	IC uPC4572G2-E2	
IC1009	8-759-075-66	IC TA75S01F(TE85R)	
IC1010	8-759-603-27	IC M5201FP-600D	
IC1012	8-759-603-27	IC M5201FP-600D	
IC1101	8-759-580-27	IC S-81236SGUP-DQ7-T1	
IC1102	8-759-424-79	IC S-8423YFS-T2	
IC1103	8-759-642-45	IC TL1596CPWR	
IC1104	8-752-915-98	IC CXP921064A-013GA-T6	
IC1105	8-759-566-20	IC AK6440BH-E2	
IC1301	8-759-599-37	IC AN2225FHQ-EB	
IC1401	8-759-667-01	IC HD6437044P13XSZ	
IC1402	8-759-234-20	IC TC7S08F(TE85R)	
IC1403	8-759-643-81	IC MSM51V18160DSL-6LFS1	
IC1404	8-759-495-15	IC uPD4721GS-GJG-E2	
IC1405	8-759-327-60	IC TC7W125FU-TE12R	
IC1406	8-759-566-20	IC AK6440BH-E2	
IC1407	8-752-398-08	IC CXD3133AGA-T6	
IC1408	8-759-643-81	IC MSM51V18160DSL-6LFS1	
IC1409	8-759-642-42	IC RC5V834/E2	
IC1410	8-759-584-32	IC MB86189PFV-G-BND-ER	
IC1411	8-759-058-60	IC TC7SU04FU(TE85R)	
IC1412	8-759-644-18	IC ML2201-100MBZ060	
IC1802	8-759-660-93	IC RB5P004AM1	
IC1803	8-752-405-57	IC CXD3501AR-T4	
		< COIL >	
L101	1-414-771-91	INDUCTOR CHIP 10uH	
L102	1-414-771-91	INDUCTOR CHIP 10uH	
L103	1-414-771-91	INDUCTOR CHIP 10uH	
L303	1-412-936-11	INDUCTOR 0.56uH	
L304	1-414-246-11	INDUCTOR 1.8uH	
L305	1-414-754-11	INDUCTOR 10uH	
L306	1-414-771-91	INDUCTOR CHIP 10uH	
L307	1-469-525-91	INDUCTOR 10uH	
L401	1-414-771-91	INDUCTOR CHIP 10uH	
L402	1-414-771-91	INDUCTOR CHIP 10uH	
L701	1-414-754-11	INDUCTOR 10uH	
L702	1-414-755-11	INDUCTOR 22uH	
L710	1-414-755-11	INDUCTOR 22uH	
L801	1-414-754-11	INDUCTOR 10uH	
L802	1-412-951-11	INDUCTOR 10uH	

Ref. No.	Part No.	Description	Remarks
L901	1-414-771-91	INDUCTOR CHIP 10uH	
L902	1-414-771-91	INDUCTOR CHIP 10uH	
L1001	1-414-754-11	INDUCTOR 10uH	
L1002	1-469-058-11	INDUCTOR CHIP 22uH	
L1003	1-414-754-11	INDUCTOR 10uH	
L1004	1-414-754-11	INDUCTOR 10uH	
L1073	1-414-754-11	INDUCTOR 10uH	
L1301	1-414-771-91	INDUCTOR CHIP 10uH	
L1302	1-414-771-91	INDUCTOR CHIP 10uH	
L1303	1-412-939-11	INDUCTOR 1uH	
L1304	1-414-771-91	INDUCTOR CHIP 10uH	
L1801	1-469-058-11	INDUCTOR CHIP 22uH	
L1802	1-412-945-11	INDUCTOR 3.3uH	
L1803	1-414-771-91	INDUCTOR CHIP 10uH	
		< TRANSISTOR >	
Q001	8-729-028-27	TRANSISTOR 2SK2009(TE85L)	
Q003	8-729-037-72	TRANSISTOR UN9211J-(K8).SO	
Q004	8-729-037-72	TRANSISTOR UN9211J-(K8).SO	
Q102	8-729-037-53	TRANSISTOR 2SB1462J-QR(K8).SO	
Q301	8-729-037-53	TRANSISTOR 2SB1462J-QR(K8).SO	
Q302	8-729-037-53	TRANSISTOR 2SB1462J-QR(K8).SO	
Q303	8-729-037-53	TRANSISTOR 2SB1462J-QR(K8).SO	
Q304	8-729-037-53	TRANSISTOR 2SB1462J-QR(K8).SO	
Q305	8-729-037-53	TRANSISTOR 2SB1462J-QR(K8).SO	
Q306	8-729-037-53	TRANSISTOR 2SB1462J-QR(K8).SO	
Q307	8-729-037-53	TRANSISTOR 2SB1462J-QR(K8).SO	
Q308	8-729-037-53	TRANSISTOR 2SB1462J-QR(K8).SO	
Q401	8-729-037-52	TRANSISTOR 2SD2216J-QR(K8).SO	
Q402	8-729-049-91	TRANSISTOR 2SA2018H-T2L	
Q701	8-729-042-68	TRANSISTOR UN911FJ-(K8).SO	
Q702	8-729-037-74	TRANSISTOR UN9213J-(K8).SO	
Q801	8-729-037-72	TRANSISTOR UN9211J-(K8).SO	
Q902	8-729-037-53	TRANSISTOR 2SB1462J-QR(K8).SO	
Q903	8-729-037-52	TRANSISTOR 2SD2216J-QR(K8).SO	
Q904	8-729-049-91	TRANSISTOR 2SA2018H-T2L	
Q905	8-729-037-74	TRANSISTOR UN9213J-(K8).SO	
Q906	8-729-037-53	TRANSISTOR 2SB1462J-QR(K8).SO	
Q1001	8-729-037-71	TRANSISTOR UN9210J-(K8).SO	
Q1002	8-729-037-52	TRANSISTOR 2SD2216J-QR(K8).SO	
Q1003	8-729-037-71	TRANSISTOR UN9210J-(K8).SO	
Q1004	8-729-037-63	TRANSISTOR UN9115J-(K8).SO	
Q1005	8-729-037-52	TRANSISTOR 2SD2216J-QR(K8).SO	
Q1006	8-729-037-52	TRANSISTOR 2SD2216J-QR(K8).SO	
Q1008	8-729-037-63	TRANSISTOR UN9115J-(K8).SO	
Q1009	8-729-037-52	TRANSISTOR 2SD2216J-QR(K8).SO	
Q1010	8-729-037-74	TRANSISTOR UN9213J-(K8).SO	
Q1011	8-729-024-39	TRANSISTOR 2SD1511-R/S(TX)	
Q1014	8-729-037-63	TRANSISTOR UN9115J-(K8).SO	
Q1015	8-729-037-74	TRANSISTOR UN9213J-(K8).SO	
Q1016	8-729-037-74	TRANSISTOR UN9213J-(K8).SO	
Q1024	8-729-037-53	TRANSISTOR 2SB1462J-QR(K8).SO	
Q1025	8-729-037-53	TRANSISTOR 2SB1462J-QR(K8).SO	
Q1101	8-729-037-52	TRANSISTOR 2SD2216J-QR(K8).SO	
Q1102	8-729-037-52	TRANSISTOR 2SD2216J-QR(K8).SO	
Q1103	8-729-037-74	TRANSISTOR UN9213J-(K8).SO	

Ref. No.	Part No.	Description			Remarks
Q1104	8-729-041-43	TRANSISTOR	HN1L02FU(TE85R)		
Q1105	8-729-037-74	TRANSISTOR	UN9213J-(K8).SO		
Q1106	8-729-042-58	TRANSISTOR	UN9111J-(K8).SO		
Q1107	8-729-037-53	TRANSISTOR	2SB1462J-QR(K8).SO		
Q1108	8-729-037-61	TRANSISTOR	UN9113J-(K8).SO		
Q1109	8-729-049-91	TRANSISTOR	2SA2018H-T2L		
Q1110	8-729-037-74	TRANSISTOR	UN9213J-(K8).SO		
Q1111	8-729-037-61	TRANSISTOR	UN9113J-(K8).SO		
Q1112	8-729-037-53	TRANSISTOR	2SB1462J-QR(K8).SO		
Q1113	8-729-037-52	TRANSISTOR	2SD2216J-QR(K8).SO		
Q1114	8-729-037-53	TRANSISTOR	2SB1462J-QR(K8).SO		
Q1115	8-729-042-57	TRANSISTOR	UN9110J-(K8).SO		
Q1116	8-729-037-71	TRANSISTOR	UN9210J-(K8).SO		
Q1301	8-729-037-52	TRANSISTOR	2SD2216J-QR(K8).SO		
Q1401	8-729-037-74	TRANSISTOR	UN9213J-(K8).SO		
Q1402	8-729-037-74	TRANSISTOR	UN9213J-(K8).SO		
Q1403	8-729-037-61	TRANSISTOR	UN9113J-(K8).SO		
Q1404	8-729-037-74	TRANSISTOR	UN9213J-(K8).SO		
Q1405	8-729-037-53	TRANSISTOR	2SB1462J-QR(K8).SO		
Q1801	8-729-037-74	TRANSISTOR	UN9213J-(K8).SO		
		< RESISTOR >			
R001	1-218-977-11	RES-CHIP	100K	5%	1/16W
R002	1-218-954-11	RES-CHIP	1.2K	5%	1/16W
R003	1-218-955-11	RES-CHIP	1.5K	5%	1/16W
R004	1-218-959-11	RES-CHIP	3.3K	5%	1/16W
R005	1-218-963-11	RES-CHIP	6.8K	5%	1/16W
R007	1-218-961-11	RES-CHIP	4.7K	5%	1/16W
R008	1-218-990-11	SHORT	0		
R010	1-218-990-11	SHORT	0		
R020	1-216-833-91	RES-CHIP	10K	5%	1/16W
R021	1-216-833-91	RES-CHIP	10K	5%	1/16W
R022	1-216-833-91	RES-CHIP	10K	5%	1/16W
R023	1-216-803-11	METAL CHIP	33	5%	1/16W
R024	1-216-803-11	METAL CHIP	33	5%	1/16W
R103	1-218-965-11	RES-CHIP	10K	5%	1/16W
R104	1-218-963-11	RES-CHIP	6.8K	5%	1/16W
R105	1-218-990-11	SHORT	0		
R106	1-218-989-11	RES-CHIP	1M	5%	1/16W
R107	1-218-979-11	RES-CHIP	150K	5%	1/16W
R108	1-218-966-11	RES-CHIP	12K	5%	1/16W
R109	1-218-965-11	RES-CHIP	10K	5%	1/16W
R110	1-218-949-11	RES-CHIP	470	5%	1/16W
R112	1-218-966-11	RES-CHIP	12K	5%	1/16W
R113	1-218-961-11	RES-CHIP	4.7K	5%	1/16W
R114	1-218-965-11	RES-CHIP	10K	5%	1/16W
R115	1-218-969-11	RES-CHIP	22K	5%	1/16W
R116	1-208-910-11	METAL CHIP	9.1K	0.5%	1/16W
R117	1-208-909-11	METAL CHIP	8.2K	0.5%	1/16W
R118	1-218-969-11	RES-CHIP	22K	5%	1/16W
R120	1-218-945-11	METAL CHIP	220	0.5%	1/16W
R122	1-218-945-11	METAL CHIP	220	0.5%	1/16W
R123	1-218-945-11	METAL CHIP	220	0.5%	1/16W
R124	1-218-945-11	METAL CHIP	220	0.5%	1/16W
R125	1-216-864-11	METAL CHIP	0	5%	1/16W
R126	1-216-864-11	METAL CHIP	0	5%	1/16W
R127	1-218-939-11	RES-CHIP	68	5%	1/16W

Ref. No.	Part No.	Description			Remarks
R305	1-218-990-11	SHORT	0		
R306	1-218-990-11	SHORT	0		
R310	1-218-965-11	RES-CHIP	10K	5%	1/16W
R311	1-218-965-11	RES-CHIP	10K	5%	1/16W
R312	1-218-946-11	RES-CHIP	270	5%	1/16W
R313	1-218-990-11	SHORT	0		
R314	1-218-990-11	SHORT	0		
R315	1-208-695-11	METAL CHIP	3.3K	0.5%	1/16W
R316	1-208-695-11	METAL CHIP	3.3K	0.5%	1/16W
R317	1-218-959-11	RES-CHIP	3.3K	5%	1/16W
R318	1-218-965-11	RES-CHIP	10K	5%	1/16W
R319	1-218-965-11	RES-CHIP	10K	5%	1/16W
R320	1-218-957-11	RES-CHIP	2.2K	5%	1/16W
R321	1-218-959-11	RES-CHIP	3.3K	5%	1/16W
R322	1-218-941-11	RES-CHIP	100	5%	1/16W
R323	1-218-947-11	RES-CHIP	330	5%	1/16W
R324	1-218-961-11	RES-CHIP	4.7K	5%	1/16W
R325	1-218-937-11	RES-CHIP	47	5%	1/16W
R326	1-218-990-11	SHORT	0		
R327	1-208-885-11	METAL CHIP	820	0.5%	1/16W
R328	1-208-683-11	METAL CHIP	1K	0.5%	1/16W
R329	1-208-699-11	METAL CHIP	4.7K	0.5%	1/16W
R331	1-208-699-11	METAL CHIP	4.7K	0.5%	1/16W
R332	1-208-885-11	METAL CHIP	820	0.5%	1/16W
R334	1-208-683-11	METAL CHIP	1K	0.5%	1/16W
R335	1-208-699-11	METAL CHIP	4.7K	0.5%	1/16W
R336	1-208-699-11	METAL CHIP	4.7K	0.5%	1/16W
R338	1-208-885-11	METAL CHIP	820	0.5%	1/16W
R340	1-208-683-11	METAL CHIP	1K	0.5%	1/16W
R341	1-208-699-11	METAL CHIP	4.7K	0.5%	1/16W
R343	1-208-699-11	METAL CHIP	4.7K	0.5%	1/16W
R351	1-218-946-11	RES-CHIP	270	5%	1/16W
R356	1-218-957-11	RES-CHIP	2.2K	5%	1/16W
R358	1-218-943-11	RES-CHIP	150	5%	1/16W
R360	1-218-957-11	RES-CHIP	2.2K	5%	1/16W
R361	1-208-709-11	METAL CHIP	12K	0.5%	1/16W
R364	1-208-709-11	METAL CHIP	12K	0.5%	1/16W
R367	1-218-938-11	METAL CHIP	56	0.5%	1/16W
R368	1-218-938-11	METAL CHIP	56	0.5%	1/16W
R369	1-208-707-11	METAL CHIP	10K	0.5%	1/16W
R370	1-218-938-11	METAL CHIP	56	0.5%	1/16W
R371	1-208-707-11	METAL CHIP	10K	0.5%	1/16W
R372	1-218-938-11	METAL CHIP	56	0.5%	1/16W
R377	1-218-941-11	RES-CHIP	100	5%	1/16W
R378	1-218-941-11	RES-CHIP	100	5%	1/16W
R379	1-218-941-11	RES-CHIP	100	5%	1/16W
R380	1-218-941-11	RES-CHIP	100	5%	1/16W
R381	1-218-941-11	RES-CHIP	100	5%	1/16W
R382	1-218-990-11	SHORT	0		
R383	1-218-990-11	SHORT	0		
R401	1-218-961-11	RES-CHIP	4.7K	5%	1/16W
R402	1-218-965-11	RES-CHIP	10K	5%	1/16W
R403	1-218-965-11	RES-CHIP	10K	5%	1/16W
R404	1-218-975-11	RES-CHIP	68K	5%	1/16W
R405	1-218-975-11	RES-CHIP	68K	5%	1/16W
R406	1-217-671-11	METAL CHIP	1	5%	1/10W
R407	1-217-671-11	METAL CHIP	1	5%	1/10W
R408	1-218-959-11	RES-CHIP	3.3K	5%	1/16W
R409	1-218-977-11	RES-CHIP	100K	5%	1/16W
R410	1-218-957-11	RES-CHIP	2.2K	5%	1/16W

Ref. No.	Part No.	Description			Remarks
R411	1-218-968-11	RES-CHIP	18K	5%	1/16W
R412	1-218-990-11	SHORT	0		
R416	1-218-965-11	RES-CHIP	10K	5%	1/16W
R417	1-218-961-11	RES-CHIP	4.7K	5%	1/16W
R418	1-218-977-11	RES-CHIP	100K	5%	1/16W
R419	1-218-969-11	RES-CHIP	22K	5%	1/16W
R421	1-217-671-11	METAL CHIP	1	5%	1/10W
R422	1-217-671-11	METAL CHIP	1	5%	1/10W
R423	1-217-671-11	METAL CHIP	1	5%	1/10W
R424	1-218-944-11	RES-CHIP	180	5%	1/16W
R425	1-218-966-11	RES-CHIP	12K	5%	1/16W
R426	1-218-977-11	RES-CHIP	100K	5%	1/16W
R427	1-218-977-11	RES-CHIP	100K	5%	1/16W
R428	1-218-977-11	RES-CHIP	100K	5%	1/16W
R429	1-218-989-11	RES-CHIP	1M	5%	1/16W
R430	1-216-789-11	METAL CHIP	2.2	5%	1/16W
R431	1-216-789-11	METAL CHIP	2.2	5%	1/16W
R432	1-216-789-11	METAL CHIP	2.2	5%	1/16W
R434	1-218-959-11	RES-CHIP	3.3K	5%	1/16W
R435	1-218-955-11	RES-CHIP	1.5K	5%	1/16W
R436	1-218-972-11	RES-CHIP	39K	5%	1/16W
R437	1-208-643-11	RES-CHIP	22	5%	1/16W
R501	1-218-977-11	RES-CHIP	100K	5%	1/16W
R502	1-218-977-11	RES-CHIP	100K	5%	1/16W
R503	1-218-977-11	RES-CHIP	100K	5%	1/16W
R504	1-218-977-11	RES-CHIP	100K	5%	1/16W
R505	1-218-985-11	RES-CHIP	470K	5%	1/16W
R507	1-218-953-11	RES-CHIP	1K	5%	1/16W
R508	1-218-985-11	RES-CHIP	470K	5%	1/16W
R509	1-218-985-11	RES-CHIP	470K	5%	1/16W
R510	1-218-985-11	RES-CHIP	470K	5%	1/16W
R511	1-218-985-11	RES-CHIP	470K	5%	1/16W
R512	1-218-985-11	RES-CHIP	470K	5%	1/16W
R513	1-218-953-11	RES-CHIP	1K	5%	1/16W
R514	1-218-961-11	RES-CHIP	4.7K	5%	1/16W
R515	1-218-990-11	SHORT	0		
R516	1-218-977-11	RES-CHIP	100K	5%	1/16W
R517	1-218-973-11	RES-CHIP	47K	5%	1/16W
R518	1-218-981-11	RES-CHIP	220K	5%	1/16W
R519	1-218-953-11	RES-CHIP	1K	5%	1/16W
R520	1-218-943-11	RES-CHIP	150	5%	1/16W
R521	1-218-945-11	RES-CHIP	220	5%	1/16W
R522	1-218-943-11	RES-CHIP	150	5%	1/16W
R523	1-218-945-11	RES-CHIP	220	5%	1/16W
R524	1-218-965-11	RES-CHIP	10K	5%	1/16W
R525	1-218-973-11	RES-CHIP	47K	5%	1/16W
R526	1-218-985-11	RES-CHIP	470K	5%	1/16W
R527	1-218-977-11	RES-CHIP	100K	5%	1/16W
R528	1-218-977-11	RES-CHIP	100K	5%	1/16W
R531	1-218-985-11	RES-CHIP	470K	5%	1/16W
R532	1-218-977-11	RES-CHIP	100K	5%	1/16W
R701	1-218-977-11	RES-CHIP	100K	5%	1/16W
R707	1-218-990-11	SHORT	0		
R708	1-218-990-11	SHORT	0		
R709	1-208-683-11	METAL CHIP	1K	0.5%	1/16W
R710	1-208-712-11	METAL CHIP	16K	0.5%	1/16W
R711	1-208-713-11	METAL CHIP	18K	0.5%	1/16W
R712	1-218-934-11	RES-CHIP	27	5%	1/16W
R713	1-218-934-11	RES-CHIP	27	5%	1/16W
R714	1-208-713-11	METAL CHIP	18K	0.5%	1/16W

Ref. No.	Part No.	Description			Remarks
R715	1-218-935-11	RES-CHIP	33	5%	1/16W
R716	1-218-935-11	RES-CHIP	33	5%	1/16W
R717	1-218-935-11	RES-CHIP	33	5%	1/16W
R718	1-208-713-11	METAL CHIP	18K	0.5%	1/16W
R719	1-208-713-11	METAL CHIP	18K	0.5%	1/16W
R720	1-208-713-11	METAL CHIP	18K	0.5%	1/16W
R721	1-208-713-11	METAL CHIP	18K	0.5%	1/16W
R722	1-218-934-11	RES-CHIP	27	5%	1/16W
R723	1-218-934-11	RES-CHIP	27	5%	1/16W
R724	1-218-934-11	RES-CHIP	27	5%	1/16W
R725	1-218-934-11	RES-CHIP	27	5%	1/16W
R728	1-218-990-11	SHORT	0		
R730	1-218-985-11	RES-CHIP	470K	5%	1/16W
R731	1-218-937-11	RES-CHIP	47	5%	1/16W
R733	1-218-962-11	RES-CHIP	5.6K	5%	1/16W
R734	1-218-965-11	RES-CHIP	10K	5%	1/16W
R735	1-218-990-11	SHORT	0		
R736	1-218-990-11	SHORT	0		
R737	1-218-990-11	SHORT	0		
R738	1-218-990-11	SHORT	0		
R739	1-218-990-11	SHORT	0		
R740	1-218-990-11	SHORT	0		
R762	1-220-193-81	RES-CHIP	7.5K	5%	1/16W
R764	1-218-959-11	RES-CHIP	3.3K	5%	1/16W
R773	1-218-990-11	SHORT	0		
R801	1-218-977-11	RES-CHIP	100K	5%	1/16W
R802	1-218-977-11	RES-CHIP	100K	5%	1/16W
R803	1-218-977-11	RES-CHIP	100K	5%	1/16W
R812	1-218-977-11	RES-CHIP	100K	5%	1/16W
R813	1-218-977-11	RES-CHIP	100K	5%	1/16W
R814	1-218-977-11	RES-CHIP	100K	5%	1/16W
R815	1-218-953-11	RES-CHIP	1K	5%	1/16W
R816	1-218-953-11	RES-CHIP	1K	5%	1/16W
R818	1-218-953-11	RES-CHIP	1K	5%	1/16W
R819	1-218-989-11	RES-CHIP	1M	5%	1/16W
R820	1-218-973-11	RES-CHIP	47K	5%	1/16W
R822	1-218-953-11	RES-CHIP	1K	5%	1/16W
R826	1-218-953-11	RES-CHIP	1K	5%	1/16W
R827	1-218-977-11	RES-CHIP	100K	5%	1/16W
R828	1-218-953-11	RES-CHIP	1K	5%	1/16W
R829	1-218-953-11	RES-CHIP	1K	5%	1/16W
R830	1-218-989-11	RES-CHIP	1M	5%	1/16W
R831	1-218-953-11	RES-CHIP	1K	5%	1/16W
R833	1-218-977-11	RES-CHIP	100K	5%	1/16W
R835	1-218-989-11	RES-CHIP	1M	5%	1/16W
R836	1-218-985-11	RES-CHIP	470K	5%	1/16W
R837	1-218-985-11	RES-CHIP	470K	5%	1/16W
R838	1-218-977-11	RES-CHIP	100K	5%	1/16W
R839	1-218-961-11	RES-CHIP	4.7K	5%	1/16W
R840	1-218-961-11	RES-CHIP	4.7K	5%	1/16W
R841	1-218-985-11	RES-CHIP	470K	5%	1/16W
R842	1-218-985-11	RES-CHIP	470K	5%	1/16W
R843	1-218-985-11	RES-CHIP	470K	5%	1/16W
R850	1-218-977-11	RES-CHIP	100K	5%	1/16W
R851	1-218-977-11	RES-CHIP	100K	5%	1/16W
R852	1-218-977-11	RES-CHIP	100K	5%	1/16W
R853	1-218-953-11	RES-CHIP	1K	5%	1/16W
R854	1-218-953-11	RES-CHIP	1K	5%	1/16W
R907	1-218-965-11	RES-CHIP	10K	5%	1/16W
R908	1-218-965-11	RES-CHIP	10K	5%	1/16W

Ref. No.	Part No.	Description			Remarks
R909	1-218-973-11	RES-CHIP	47K	5%	1/16W
R911	1-218-951-11	RES-CHIP	680	5%	1/16W
R912	1-218-965-11	RES-CHIP	10K	5%	1/16W
R916	1-218-949-11	RES-CHIP	470	5%	1/16W
R924	1-218-990-11	SHORT	0		
R930	1-218-990-11	SHORT	0		
R936	1-218-990-11	SHORT	0		
R949	1-218-990-11	SHORT	0		
R953	1-218-990-11	SHORT	0		
R954	1-218-941-11	RES-CHIP	100	5%	1/16W
R955	1-218-977-11	RES-CHIP	100K	5%	1/16W
R956	1-218-960-11	RES-CHIP	3.9K	5%	1/16W
R957	1-218-957-11	RES-CHIP	2.2K	5%	1/16W
R958	1-218-953-11	RES-CHIP	1K	5%	1/16W
R1001	1-218-957-11	RES-CHIP	2.2K	5%	1/16W
R1003	1-218-990-11	SHORT	0		
R1004	1-218-990-11	SHORT	0		
R1005	1-218-957-11	RES-CHIP	2.2K	5%	1/16W
R1006	1-218-973-11	RES-CHIP	47K	5%	1/16W
R1007	1-218-937-11	RES-CHIP	47	5%	1/16W
R1008	1-218-937-11	RES-CHIP	47	5%	1/16W
R1009	1-218-957-11	RES-CHIP	2.2K	5%	1/16W
R1010	1-218-953-11	RES-CHIP	1K	5%	1/16W
R1011	1-218-973-11	RES-CHIP	47K	5%	1/16W
R1012	1-218-937-11	RES-CHIP	47	5%	1/16W
R1013	1-218-937-11	RES-CHIP	47	5%	1/16W
R1014	1-218-957-11	RES-CHIP	2.2K	5%	1/16W
R1015	1-218-960-11	RES-CHIP	3.9K	5%	1/16W
R1016	1-218-973-11	RES-CHIP	47K	5%	1/16W
R1018	1-218-961-11	RES-CHIP	4.7K	5%	1/16W
R1020	1-218-971-11	RES-CHIP	33K	5%	1/16W
R1021	1-218-957-11	RES-CHIP	2.2K	5%	1/16W
R1022	1-218-965-11	RES-CHIP	10K	5%	1/16W
R1023	1-218-965-11	RES-CHIP	10K	5%	1/16W
R1024	1-218-979-11	RES-CHIP	150K	5%	1/16W
R1025	1-218-953-11	RES-CHIP	1K	5%	1/16W
R1026	1-218-949-11	RES-CHIP	470	5%	1/16W
R1027	1-218-969-11	RES-CHIP	22K	5%	1/16W
R1029	1-218-949-11	RES-CHIP	470	5%	1/16W
R1030	1-218-965-11	RES-CHIP	10K	5%	1/16W
R1033	1-218-973-11	RES-CHIP	47K	5%	1/16W
R1034	1-218-973-11	RES-CHIP	47K	5%	1/16W
R1035	1-218-961-11	RES-CHIP	4.7K	5%	1/16W
R1036	1-218-961-11	RES-CHIP	4.7K	5%	1/16W
R1037	1-218-961-11	RES-CHIP	4.7K	5%	1/16W
R1039	1-218-990-11	SHORT	0		
R1041	1-218-953-11	RES-CHIP	1K	5%	1/16W
R1042	1-208-928-11	METAL CHIP	51K	0.5%	1/16W
R1043	1-208-719-11	METAL CHIP	33K	0.5%	1/16W
R1044	1-218-973-11	RES-CHIP	47K	5%	1/16W
R1045	1-218-965-11	RES-CHIP	10K	5%	1/16W
R1046	1-218-973-11	RES-CHIP	47K	5%	1/16W
R1047	1-218-973-11	RES-CHIP	47K	5%	1/16W
R1048	1-218-973-11	RES-CHIP	47K	5%	1/16W
R1049	1-218-973-11	RES-CHIP	47K	5%	1/16W
R1050	1-218-957-11	RES-CHIP	2.2K	5%	1/16W
R1051	1-218-979-11	RES-CHIP	150K	5%	1/16W
R1053	1-218-949-11	RES-CHIP	470	5%	1/16W
R1058	1-208-928-11	METAL CHIP	51K	0.5%	1/16W
R1059	1-218-977-11	RES-CHIP	100K	5%	1/16W

Ref. No.	Part No.	Description			Remarks
R1060	1-218-980-11	RES-CHIP	180K	5%	1/16W
R1061	1-218-981-11	RES-CHIP	220K	5%	1/16W
R1062	1-218-969-11	RES-CHIP	22K	5%	1/16W
R1063	1-218-969-11	RES-CHIP	22K	5%	1/16W
R1064	1-218-981-11	RES-CHIP	220K	5%	1/16W
R1066	1-218-965-11	RES-CHIP	10K	5%	1/16W
R1067	1-218-965-11	RES-CHIP	10K	5%	1/16W
R1068	1-218-980-11	RES-CHIP	180K	5%	1/16W
R1069	1-218-977-11	RES-CHIP	100K	5%	1/16W
R1070	1-218-969-11	RES-CHIP	22K	5%	1/16W
R1071	1-218-969-11	RES-CHIP	22K	5%	1/16W
R1072	1-218-953-11	RES-CHIP	1K	5%	1/16W
R1073	1-218-953-11	RES-CHIP	1K	5%	1/16W
R1074	1-218-966-11	RES-CHIP	12K	5%	1/16W
R1075	1-218-966-11	RES-CHIP	12K	5%	1/16W
R1076	1-208-719-11	METAL CHIP	33K	0.5%	1/16W
R1077	1-218-973-11	RES-CHIP	47K	5%	1/16W
R1078	1-218-973-11	RES-CHIP	47K	5%	1/16W
R1079	1-218-969-11	RES-CHIP	22K	5%	1/16W
R1083	1-218-973-11	RES-CHIP	47K	5%	1/16W
R1084	1-218-973-11	RES-CHIP	47K	5%	1/16W
R1090	1-218-990-11	SHORT	0		
R1103	1-218-973-11	RES-CHIP	47K	5%	1/16W
R1104	1-218-961-11	RES-CHIP	4.7K	5%	1/16W
R1106	1-218-977-11	RES-CHIP	100K	5%	1/16W
R1107	1-218-953-11	RES-CHIP	1K	5%	1/16W
R1108	1-218-985-11	RES-CHIP	470K	5%	1/16W
R1109	1-218-936-11	RES-CHIP	39	5%	1/16W
R1110	1-218-953-11	RES-CHIP	1K	5%	1/16W
R1111	1-218-957-11	RES-CHIP	2.2K	5%	1/16W
R1112	1-218-985-11	RES-CHIP	470K	5%	1/16W
R1113	1-218-953-11	RES-CHIP	1K	5%	1/16W
R1114	1-218-953-11	RES-CHIP	1K	5%	1/16W
R1115	1-218-977-11	RES-CHIP	100K	5%	1/16W
R1116	1-218-953-11	RES-CHIP	1K	5%	1/16W
R1117	1-218-985-11	RES-CHIP	470K	5%	1/16W
R1118	1-218-985-11	RES-CHIP	470K	5%	1/16W
R1119	1-218-985-11	RES-CHIP	470K	5%	1/16W
R1120	1-218-985-11	RES-CHIP	470K	5%	1/16W
R1121	1-218-985-11	RES-CHIP	470K	5%	1/16W
R1122	1-218-985-11	RES-CHIP	470K	5%	1/16W
R1123	1-218-985-11	RES-CHIP	470K	5%	1/16W
R1124	1-218-977-11	RES-CHIP	100K	5%	1/16W
R1125	1-218-977-11	RES-CHIP	100K	5%	1/16W
R1126	1-218-985-11	RES-CHIP	470K	5%	1/16W
R1128	1-218-961-11	RES-CHIP	4.7K	5%	1/16W
R1129	1-218-953-11	RES-CHIP	1K	5%	1/16W
R1130	1-218-953-11	RES-CHIP	1K	5%	1/16W
R1131	1-218-953-11	RES-CHIP	1K	5%	1/16W
R1132	1-218-953-11	RES-CHIP	1K	5%	1/16W
R1133	1-218-953-11	RES-CHIP	1K	5%	1/16W
R1134	1-218-953-11	RES-CHIP	1K	5%	1/16W
R1135	1-218-953-11	RES-CHIP	1K	5%	1/16W
R1136	1-218-953-11	RES-CHIP	1K	5%	1/16W
R1137	1-218-958-11	RES-CHIP	2.7K	5%	1/16W
R1138	1-218-977-11	RES-CHIP	100K	5%	1/16W
R1139	1-218-989-11	RES-CHIP	1M	5%	1/16W
R1140	1-218-985-11	METAL CHIP	470K	0.5%	1/16W
R1141	1-218-985-11	METAL CHIP	470K	0.5%	1/16W
R1142	1-218-989-11	METAL CHIP	1M	0.5%	1/16W

Ref. No.	Part No.	Description			Remarks
R1143	1-218-989-11	METAL CHIP	1M	0.5%	1/16W
R1144	1-218-977-11	RES-CHIP	100K	5%	1/16W
R1145	1-218-977-11	RES-CHIP	100K	5%	1/16W
R1146	1-218-977-11	RES-CHIP	100K	5%	1/16W
R1147	1-218-953-11	RES-CHIP	1K	5%	1/16W
R1148	1-218-953-11	RES-CHIP	1K	5%	1/16W
R1149	1-218-953-11	RES-CHIP	1K	5%	1/16W
R1150	1-218-953-11	RES-CHIP	1K	5%	1/16W
R1151	1-218-953-11	RES-CHIP	1K	5%	1/16W
R1152	1-218-953-11	RES-CHIP	1K	5%	1/16W
R1153	1-218-977-11	RES-CHIP	100K	5%	1/16W
R1154	1-218-953-11	RES-CHIP	1K	5%	1/16W
R1155	1-218-953-11	RES-CHIP	1K	5%	1/16W
R1156	1-218-953-11	RES-CHIP	1K	5%	1/16W
R1157	1-218-953-11	RES-CHIP	1K	5%	1/16W
R1158	1-218-985-11	RES-CHIP	470K	5%	1/16W
R1159	1-218-985-11	RES-CHIP	470K	5%	1/16W
R1160	1-218-965-11	RES-CHIP	10K	5%	1/16W
R1161	1-218-965-11	RES-CHIP	10K	5%	1/16W
R1162	1-218-965-11	RES-CHIP	10K	5%	1/16W
R1163	1-218-965-11	RES-CHIP	10K	5%	1/16W
R1164	1-218-965-11	RES-CHIP	10K	5%	1/16W
R1165	1-218-965-11	RES-CHIP	10K	5%	1/16W
R1166	1-218-965-11	RES-CHIP	10K	5%	1/16W
R1167	1-218-965-11	RES-CHIP	10K	5%	1/16W
R1176	1-218-953-11	RES-CHIP	1K	5%	1/16W
R1177	1-218-965-11	RES-CHIP	10K	5%	1/16W
R1178	1-218-953-11	RES-CHIP	1K	5%	1/16W
R1179	1-218-973-11	RES-CHIP	47K	5%	1/16W
R1180	1-218-989-11	RES-CHIP	1M	5%	1/16W
R1181	1-218-953-11	RES-CHIP	1K	5%	1/16W
R1188	1-218-985-11	RES-CHIP	470K	5%	1/16W
R1189	1-218-985-11	RES-CHIP	470K	5%	1/16W
R1191	1-218-977-11	RES-CHIP	100K	5%	1/16W
R1192	1-218-989-11	RES-CHIP	1M	5%	1/16W
R1193	1-218-977-11	RES-CHIP	100K	5%	1/16W
R1194	1-218-977-11	RES-CHIP	100K	5%	1/16W
R1195	1-218-977-11	RES-CHIP	100K	5%	1/16W
R1196	1-218-962-11	RES-CHIP	5.6K	5%	1/16W
R1197	1-218-957-11	RES-CHIP	2.2K	5%	1/16W
R1198	1-218-953-11	RES-CHIP	1K	5%	1/16W
R1199	1-218-953-11	RES-CHIP	1K	5%	1/16W
R1200	1-218-953-11	RES-CHIP	1K	5%	1/16W
R1201	1-218-953-11	RES-CHIP	1K	5%	1/16W
R1202	1-218-953-11	RES-CHIP	1K	5%	1/16W
R1203	1-219-570-11	RES-CHIP	10M	5%	1/16W
R1204	1-218-965-11	RES-CHIP	10K	5%	1/16W
R1205	1-218-953-11	RES-CHIP	1K	5%	1/16W
R1206	1-218-955-11	RES-CHIP	1.5K	5%	1/16W
R1207	1-218-977-11	RES-CHIP	100K	5%	1/16W
R1208	1-218-985-11	RES-CHIP	470K	5%	1/16W
R1209	1-218-985-11	RES-CHIP	470K	5%	1/16W
R1210	1-218-985-11	RES-CHIP	470K	5%	1/16W
R1211	1-218-949-11	RES-CHIP	470	5%	1/16W
R1212	1-216-791-11	METAL CHIP	3.3	5%	1/16W
R1213	1-218-961-11	RES-CHIP	4.7K	5%	1/16W
R1214	1-218-985-11	RES-CHIP	470K	5%	1/16W
R1215	1-218-959-11	RES-CHIP	3.3K	5%	1/16W
R1216	1-218-959-11	RES-CHIP	3.3K	5%	1/16W
R1217	1-218-959-11	RES-CHIP	3.3K	5%	1/16W

Ref. No.	Part No.	Description			Remarks
R1218	1-218-979-11	RES-CHIP	150K	5%	1/16W
R1219	1-218-973-11	RES-CHIP	47K	5%	1/16W
R1220	1-218-985-11	RES-CHIP	470K	5%	1/16W
R1221	1-218-953-11	RES-CHIP	1K	5%	1/16W
R1222	1-218-953-11	RES-CHIP	1K	5%	1/16W
R1223	1-218-953-11	RES-CHIP	1K	5%	1/16W
R1224	1-218-953-11	RES-CHIP	1K	5%	1/16W
R1225	1-208-935-11	METAL CHIP	100K	0.5%	1/16W
R1226	1-208-935-11	METAL CHIP	100K	0.5%	1/16W
R1227	1-218-985-11	RES-CHIP	470K	5%	1/16W
R1228	1-218-961-11	RES-CHIP	4.7K	5%	1/16W
R1229	1-218-989-11	RES-CHIP	1M	5%	1/16W
R1230	1-218-979-11	RES-CHIP	150K	5%	1/16W
R1231	1-218-949-11	RES-CHIP	470	5%	1/16W
R1301	1-218-961-11	RES-CHIP	4.7K	5%	1/16W
R1302	1-218-961-11	RES-CHIP	4.7K	5%	1/16W
R1304	1-218-941-11	RES-CHIP	100	5%	1/16W
R1305	1-218-981-11	RES-CHIP	220K	5%	1/16W
R1312	1-218-935-11	RES-CHIP	33	5%	1/16W
R1313	1-218-935-11	RES-CHIP	33	5%	1/16W
R1314	1-218-935-11	RES-CHIP	33	5%	1/16W
R1315	1-218-935-11	RES-CHIP	33	5%	1/16W
R1316	1-218-935-11	RES-CHIP	33	5%	1/16W
R1317	1-218-935-11	RES-CHIP	33	5%	1/16W
R1318	1-208-715-11	METAL CHIP	22K	0.5%	1/16W
R1319	1-218-953-11	RES-CHIP	1K	5%	1/16W
R1320	1-218-971-11	RES-CHIP	33K	5%	1/16W
R1321	1-218-973-11	RES-CHIP	47K	5%	1/16W
R1322	1-218-953-11	RES-CHIP	1K	5%	1/16W
R1323	1-218-971-11	RES-CHIP	33K	5%	1/16W
R1324	1-218-949-11	RES-CHIP	470	5%	1/16W
R1325	1-218-965-11	RES-CHIP	10K	5%	1/16W
R1326	1-218-953-11	RES-CHIP	1K	5%	1/16W
R1327	1-218-953-11	RES-CHIP	1K	5%	1/16W
R1328	1-218-953-11	RES-CHIP	1K	5%	1/16W
R1329	1-218-953-11	RES-CHIP	1K	5%	1/16W
R1330	1-218-957-11	RES-CHIP	2.2K	5%	1/16W
R1401	1-218-977-11	RES-CHIP	100K	5%	1/16W
R1402	1-218-985-11	RES-CHIP	470K	5%	1/16W
R1403	1-218-985-11	RES-CHIP	470K	5%	1/16W
R1404	1-218-973-11	RES-CHIP	47K	5%	1/16W
R1405	1-218-958-11	RES-CHIP	2.7K	5%	1/16W
R1406	1-218-946-11	RES-CHIP	270	5%	1/16W
R1407	1-218-990-11	SHORT	0		
R1408	1-218-985-11	RES-CHIP	470K	5%	1/16W
R1409	1-218-944-11	RES-CHIP	180	5%	1/16W
R1410	1-218-932-11	RES-CHIP	18	5%	1/16W
R1411	1-218-973-11	RES-CHIP	47K	5%	1/16W
R1412	1-218-973-11	RES-CHIP	47K	5%	1/16W
R1413	1-218-990-11	SHORT	0		
R1414	1-218-977-11	RES-CHIP	100K	5%	1/16W
R1415	1-218-977-11	RES-CHIP	100K	5%	1/16W
R1416	1-218-977-11	RES-CHIP	100K	5%	1/16W
R1417	1-218-977-11	RES-CHIP	100K	5%	1/16W
R1418	1-218-977-11	RES-CHIP	100K	5%	1/16W
R1419	1-218-977-11	RES-CHIP	100K	5%	1/16W
R1420	1-218-977-11	RES-CHIP	100K	5%	1/16W
R1421	1-218-977-11	RES-CHIP	100K	5%	1/16W
R1422	1-218-977-11	RES-CHIP	100K	5%	1/16W
R1423	1-218-977-11	RES-CHIP	100K	5%	1/16W

Ref. No.	Part No.	Description			Remarks
R1424	1-218-977-11	RES-CHIP	100K	5%	1/16W
R1425	1-218-977-11	RES-CHIP	100K	5%	1/16W
R1426	1-218-977-11	RES-CHIP	100K	5%	1/16W
R1427	1-218-977-11	RES-CHIP	100K	5%	1/16W
R1428	1-218-977-11	RES-CHIP	100K	5%	1/16W
R1429	1-218-977-11	RES-CHIP	100K	5%	1/16W
R1430	1-218-977-11	RES-CHIP	100K	5%	1/16W
R1431	1-218-977-11	RES-CHIP	100K	5%	1/16W
R1432	1-218-977-11	RES-CHIP	100K	5%	1/16W
R1433	1-218-977-11	RES-CHIP	100K	5%	1/16W
R1434	1-218-977-11	RES-CHIP	100K	5%	1/16W
R1435	1-218-977-11	RES-CHIP	100K	5%	1/16W
R1436	1-218-977-11	RES-CHIP	100K	5%	1/16W
R1437	1-218-977-11	RES-CHIP	100K	5%	1/16W
R1438	1-218-977-11	RES-CHIP	100K	5%	1/16W
R1439	1-218-965-11	RES-CHIP	10K	5%	1/16W
R1440	1-218-965-11	RES-CHIP	10K	5%	1/16W
R1441	1-218-977-11	RES-CHIP	100K	5%	1/16W
R1442	1-218-965-11	RES-CHIP	10K	5%	1/16W
R1443	1-218-977-11	RES-CHIP	100K	5%	1/16W
R1444	1-218-973-11	RES-CHIP	47K	5%	1/16W
R1445	1-218-989-11	METAL CHIP	1M	0.5%	1/16W
R1446	1-218-973-11	RES-CHIP	47K	5%	1/16W
R1447	1-218-953-11	RES-CHIP	1K	5%	1/16W
R1448	1-218-977-11	RES-CHIP	100K	5%	1/16W
R1449	1-218-977-11	RES-CHIP	100K	5%	1/16W
R1450	1-218-977-11	RES-CHIP	100K	5%	1/16W
R1451	1-218-953-11	RES-CHIP	1K	5%	1/16W
R1452	1-218-941-11	RES-CHIP	100	5%	1/16W
R1453	1-218-961-11	RES-CHIP	4.7K	5%	1/16W
R1454	1-218-953-11	RES-CHIP	1K	5%	1/16W
R1455	1-218-938-11	RES-CHIP	56	5%	1/16W
R1457	1-218-941-11	RES-CHIP	100	5%	1/16W
R1801	1-218-985-11	RES-CHIP	470K	5%	1/16W
R1804	1-218-990-11	SHORT	0		
R1805	1-218-990-11	SHORT	0		
R1807	1-218-967-11	RES-CHIP	15K	5%	1/16W
R1808	1-218-958-11	RES-CHIP	2.7K	5%	1/16W
R1809	1-218-973-11	RES-CHIP	47K	5%	1/16W
R1810	1-218-975-11	RES-CHIP	68K	5%	1/16W
R1811	1-218-969-11	RES-CHIP	22K	5%	1/16W
R1812	1-218-990-11	SHORT	0		
R1814	1-218-975-11	RES-CHIP	68K	5%	1/16W
R1815	1-218-989-11	RES-CHIP	1M	5%	1/16W
R1816	1-218-977-11	RES-CHIP	100K	5%	1/16W
R1818	1-218-976-11	RES-CHIP	82K	5%	1/16W
R1819	1-218-990-11	SHORT	0		
R1821	1-218-941-11	RES-CHIP	100	5%	1/16W
R1822	1-218-941-11	RES-CHIP	100	5%	1/16W
R1823	1-218-941-11	RES-CHIP	100	5%	1/16W
R1824	1-218-970-11	RES-CHIP	27K	5%	1/16W
R1825	1-218-965-11	RES-CHIP	10K	5%	1/16W
R1826	1-218-977-11	RES-CHIP	100K	5%	1/16W
R1830	1-218-990-11	SHORT	0		
R1831	1-218-990-11	SHORT	0		
R1832	1-218-990-11	SHORT	0		
R1833	1-218-990-11	SHORT	0		

Ref. No.	Part No.	Description			Remarks
		< VIBRATOR >			
X301	1-781-045-21	VIBRATOR, CRYSTAL(24.576MHz)			
X501	1-781-044-21	VIBRATOR, CRYSTAL(20MHz)			
X701	1-767-586-21	VIBRATOR, CRYSTAL(27MHz)			
X801	1-767-980-21	VIBRATOR, CERAMIC(20MHz)			
X1101	1-767-980-21	VIBRATOR, CERAMIC(20MHz)			
X1102	1-767-994-41	VIBRATOR, CRYSTAL(32.768KHz)			
X1301	1-781-763-21	VIBRATOR, CRYSTAL(13.5MHz)			
X1401	1-781-770-21	VIBRATOR, LITHIUM NIOBATE(7.375MHz)			
X1402	1-781-044-21	VIBRATOR, CRYSTAL(20MHz)			
	A-7074-469-A	XD-001 BOARD, COMPLETE			
		**********			
					(Ref.No.;30000Series)
		< CAPACITOR >			
C401	1-113-985-11	TANTAL. CHIP	10uF	20%	20V
C402	1-115-467-11	CERAMIC CHIP	0.22uF	10%	10V
C403	1-109-935-11	TANTAL. CHIP	4.7uF	20%	6.3V
C404	1-125-777-11	CERAMIC CHIP	0.1uF	10%	10V
C405	1-125-777-11	CERAMIC CHIP	0.1uF	10%	10V
C406	1-117-919-11	TANTAL. CHIP	10uF	20%	6.3V
C407	1-125-777-11	CERAMIC CHIP	0.1uF	10%	10V
C408	1-164-874-11	CERAMIC CHIP	100PF	5%	16V
C410	1-104-919-11	TANTAL. CHIP	10uF	20%	25V
C413	1-110-618-11	ELECT	12uF	20%	63V
C414	1-165-319-11	CERAMIC CHIP	0.1uF		50V
C415	1-165-319-11	CERAMIC CHIP	0.1uF		50V
C416	1-110-618-11	ELECT	12uF	20%	63V
C417	1-104-920-11	TANTAL. CHIP	4.7uF	20%	35V
C418	1-104-920-11	TANTAL. CHIP	4.7uF	20%	35V
C419	1-104-920-11	TANTAL. CHIP	4.7uF	20%	35V
C420	1-104-920-11	TANTAL. CHIP	4.7uF	20%	35V
		< CONNECTOR >			
CN401	1-766-343-21	CONNECTOR, FFC/FPC 13P			
		< DIODE >			
D401	8-719-951-20	DIODE BR1102W-TR			
D402	8-719-987-21	DIODE SB02-09CP-TB			
		< IC >			
IC400	8-749-013-13	IC RS-70-TU			
IC401	8-759-521-35	IC TL5001CDR			
		< COIL >			
L400	1-412-058-11	INDUCTOR CHIP	10uH		
L402	1-414-405-11	INDUCTOR	150uH		
		< TRANSISTOR >			
Q401	8-729-037-71	TRANSISTOR	UN9210J-(TX).SO		
Q402	8-729-117-32	TRANSISTOR	2SC4177-T1L5L6		
Q403	8-729-117-32	TRANSISTOR	2SC4177-T1L5L6		
Q404	8-729-033-65	TRANSISTOR	2SJ204-T1B		
Q405	8-729-117-32	TRANSISTOR	2SC4177-T1L5L6		

Ref. No.	Part No.	Description			Remarks
Q406	8-729-117-32	TRANSISTOR	2SC4177-T1L5L6		
Q407	8-729-117-32	TRANSISTOR	2SC4177-T1L5L6		
Q408	8-729-041-23	TRANSISTOR	NDS356AP		
Q409	8-729-117-32	TRANSISTOR	2SC4177-T1L5L6		
Q410	8-729-140-63	TRANSISTOR	2SA1611T1-M5M6		
Q411	8-729-042-92	TRANSISTOR	2SK1470-TD		
		< RESISTOR >			
R401	1-218-951-11	RES-CHIP	680	5%	1/16W
R402	1-218-970-11	RES-CHIP	27K	5%	1/16W
R403	1-218-970-11	RES-CHIP	27K	5%	1/16W
R404	1-218-957-11	RES-CHIP	2.2K	5%	1/16W
R405	1-218-978-11	METAL CHIP	120K	0.5%	1/16W
R406	1-218-978-11	RES-CHIP	120K	5%	1/16W
R407	1-218-981-11	RES-CHIP	220K	5%	1/16W
R408	1-218-937-11	RES-CHIP	47	5%	1/16W
R409	1-218-957-11	RES-CHIP	2.2K	5%	1/16W
R410	1-218-957-11	RES-CHIP	2.2K	5%	1/16W
R411	1-218-985-11	RES-CHIP	470K	5%	1/16W
R412	1-218-965-11	RES-CHIP	10K	5%	1/16W
R413	1-218-961-11	RES-CHIP	4.7K	5%	1/16W
R414	1-218-957-11	RES-CHIP	2.2K	5%	1/16W
R415	1-218-977-11	RES-CHIP	100K	5%	1/16W
R416	1-218-973-11	RES-CHIP	47K	5%	1/16W
R417	1-218-941-11	RES-CHIP	100	5%	1/16W
R418	1-218-990-11	SHORT	0		
R420	1-208-715-11	METAL CHIP	22K	0.5%	1/16W
R421	1-208-713-11	METAL CHIP	18K	0.5%	1/16W
R422	1-208-701-11	METAL CHIP	5.6K	0.5%	1/16W
R423	1-208-683-11	METAL CHIP	1K	0.5%	1/16W

A-7074-470-A XM-001 BOARD, COMPLETE
****
(Ref.No.;30000Series)

Ref. No.	Part No.	Description			Remarks
		< CAPACITOR >			
C200	1-162-964-11	CERAMIC CHIP	0.001uF	10%	50V
C201	1-162-964-11	CERAMIC CHIP	0.001uF	10%	50V
C202	1-162-964-11	CERAMIC CHIP	0.001uF	10%	50V
C203	1-162-964-11	CERAMIC CHIP	0.001uF	10%	50V
C204	1-162-964-11	CERAMIC CHIP	0.001uF	10%	50V
C205	1-162-964-11	CERAMIC CHIP	0.001uF	10%	50V
C206	1-162-964-11	CERAMIC CHIP	0.001uF	10%	50V
C207	1-162-964-11	CERAMIC CHIP	0.001uF	10%	50V
C208	1-162-964-11	CERAMIC CHIP	0.001uF	10%	50V
C209	1-128-996-11	ELECT CHIP	4.7uF	20%	50V
C210	1-128-996-11	ELECT CHIP	4.7uF	20%	50V
C211	1-128-996-11	ELECT CHIP	4.7uF	20%	50V
C212	1-128-996-11	ELECT CHIP	4.7uF	20%	50V
C213	1-162-915-11	CERAMIC CHIP	10PF	0.5PF	50V
C214	1-162-915-11	CERAMIC CHIP	10PF	0.5PF	50V
C215	1-125-777-11	CERAMIC CHIP	0.1uF	10%	10V
C216	1-125-926-91	TANTAL. CHIP	4.7uF	20%	6.3V
C217	1-125-926-91	TANTAL. CHIP	4.7uF	20%	6.3V
C218	1-125-926-91	TANTAL. CHIP	4.7uF	20%	6.3V
C219	1-164-937-11	CERAMIC CHIP	0.001uF	10%	16V
C220	1-162-964-11	CERAMIC CHIP	0.001uF	10%	50V
C221	1-164-156-11	CERAMIC CHIP	0.1uF		25V
C222	1-117-919-11	TANTAL. CHIP	10uF	20%	6.3V
C223	1-125-777-11	CERAMIC CHIP	0.1uF	10%	10V
C224	1-164-943-11	CERAMIC CHIP	0.01uF	10%	16V
C225	1-109-982-11	CERAMIC CHIP	1uF	10%	10V
C226	1-117-919-11	TANTAL. CHIP	10uF	20%	6.3V
C228	1-164-156-11	CERAMIC CHIP	0.1uF		25V
C230	1-117-919-11	TANTAL. CHIP	10uF	20%	6.3V
C231	1-117-919-11	TANTAL. CHIP	10uF	20%	6.3V
C232	1-164-943-11	CERAMIC CHIP	0.01uF	10%	16V
C300	1-162-964-11	CERAMIC CHIP	0.001uF	10%	50V
C301	1-162-964-11	CERAMIC CHIP	0.001uF	10%	50V
C302	1-162-964-11	CERAMIC CHIP	0.001uF	10%	50V
C303	1-162-964-11	CERAMIC CHIP	0.001uF	10%	50V
C304	1-162-964-11	CERAMIC CHIP	0.001uF	10%	50V
C305	1-162-964-11	CERAMIC CHIP	0.001uF	10%	50V
C306	1-162-964-11	CERAMIC CHIP	0.001uF	10%	50V
C307	1-162-964-11	CERAMIC CHIP	0.001uF	10%	50V
C308	1-162-964-11	CERAMIC CHIP	0.001uF	10%	50V
C309	1-128-996-11	ELECT CHIP	4.7uF	20%	50V
C310	1-128-996-11	ELECT CHIP	4.7uF	20%	50V
C311	1-128-996-11	ELECT CHIP	4.7uF	20%	50V
C312	1-128-996-11	ELECT CHIP	4.7uF	20%	50V
C313	1-162-915-11	CERAMIC CHIP	10PF	0.5PF	50V
C314	1-162-915-11	CERAMIC CHIP	10PF	0.5PF	50V
C315	1-125-777-11	CERAMIC CHIP	0.1uF	10%	10V
C316	1-125-926-91	TANTAL. CHIP	4.7uF	20%	6.3V
C317	1-125-926-91	TANTAL. CHIP	4.7uF	20%	6.3V
C318	1-125-926-91	TANTAL. CHIP	4.7uF	20%	6.3V
C319	1-164-937-11	CERAMIC CHIP	0.001uF	10%	16V
C320	1-162-964-11	CERAMIC CHIP	0.001uF	10%	50V
C321	1-164-156-11	CERAMIC CHIP	0.1uF		25V
C322	1-117-919-11	TANTAL. CHIP	10uF	20%	6.3V
C323	1-125-777-11	CERAMIC CHIP	0.1uF	10%	10V
C326	1-117-919-11	TANTAL. CHIP	10uF	20%	6.3V
C328	1-164-156-11	CERAMIC CHIP	0.1uF		25V
C329	1-109-982-11	CERAMIC CHIP	1uF	10%	10V
C330	1-164-943-11	CERAMIC CHIP	0.01uF	10%	16V
C331	1-117-919-11	TANTAL. CHIP	10uF	20%	6.3V
C332	1-164-943-11	CERAMIC CHIP	0.01uF	10%	16V
C334	1-117-919-11	TANTAL. CHIP	10uF	20%	6.3V
		< CONNECTOR >			
CN200	1-568-006-11	CONNECTOR, XLR TYPE 3P(MIC1)			
CN201	1-779-332-11	CONNECTOR, FFC/FPC 16P			
CN300	1-568-006-11	CONNECTOR, XLR TYPE 3P(MIC2)			
CN301	1-779-332-11	CONNECTOR, FFC/FPC 16P			
		< DIODE >			
D001	8-719-073-01	DIODE MA111-(K8).S0			
D002	8-719-073-01	DIODE MA111-(K8).S0			
D003	8-719-073-01	DIODE MA111-(K8).S0			
D004	8-719-073-01	DIODE MA111-(K8).S0			
D200	8-719-073-01	DIODE MA111-(K8).S0			
D201	8-719-073-01	DIODE MA111-(K8).S0			
D202	8-719-073-01	DIODE MA111-(K8).S0			
D203	8-719-073-01	DIODE MA111-(K8).S0			

Ref. No.	Part No.	Description			Remarks
		< IC >			
IC200	8-759-111-56	IC uPC4572G2-E2			
IC201	8-759-111-56	IC uPC4572G2-E2			
IC202	8-759-603-27	IC M5201FP-600D			
IC203	8-759-075-66	IC TA75S01F(TE85R)			
IC300	8-759-111-56	IC uPC4572G2-E2			
IC301	8-759-111-56	IC uPC4572G2-E2			
IC302	8-759-603-27	IC M5201FP-600D			
IC303	8-759-075-66	IC TA75S01F(TE85R)			
		< COIL >			
L200	1-414-398-11	INDUCTOR	10uH		
L201	1-414-398-11	INDUCTOR	10uH		
L202	1-414-398-11	INDUCTOR	10uH		
L203	1-414-854-11	INDUCTOR	1MH		
L300	1-414-398-11	INDUCTOR	10uH		
L301	1-414-398-11	INDUCTOR	10uH		
L302	1-414-398-11	INDUCTOR	10uH		
L303	1-414-854-11	INDUCTOR	1MH		
		< TRANSISTOR >			
Q201	8-729-037-74	TRANSISTOR	UN9213J-(K8).SO		
Q303	8-729-037-74	TRANSISTOR	UN9213J-(K8).SO		
		< RESISTOR >			
R200	1-216-049-91	RES-CHIP	1K	5%	1/10W
R201	1-216-049-91	RES-CHIP	1K	5%	1/10W
R202	1-216-049-91	RES-CHIP	1K	5%	1/10W
R203	1-216-049-91	RES-CHIP	1K	5%	1/10W
R204	1-216-049-91	RES-CHIP	1K	5%	1/10W
R205	1-216-049-91	RES-CHIP	1K	5%	1/10W
R206	1-216-013-00	METAL CHIP	33	5%	1/10W
R207	1-216-003-11	RES-CHIP	12	5%	1/10W
R208	1-216-295-91	SHORT	0		
R209	1-216-027-00	METAL CHIP	120	5%	1/10W
R210	1-216-027-00	METAL CHIP	120	5%	1/10W
R211	1-220-222-11	RES-CHIP	4.7K	5%	1/2W
R212	1-218-977-11	RES-CHIP	100K	5%	1/16W
R213	1-218-977-11	RES-CHIP	100K	5%	1/16W
R214	1-208-699-11	METAL CHIP	4.7K	0.5%	1/16W
R215	1-208-699-11	METAL CHIP	4.7K	0.5%	1/16W
R216	1-218-978-11	METAL CHIP	120K	0.5%	1/16W
R219	1-208-687-11	METAL CHIP	1.5K	0.5%	1/16W
R220	1-208-671-11	METAL CHIP	330	0.5%	1/16W
R221	1-218-887-11	METAL CHIP	47K	0.5%	1/16W
R222	1-208-699-11	METAL CHIP	4.7K	0.5%	1/16W
R223	1-208-721-11	METAL CHIP	39K	0.5%	1/16W
R224	1-208-699-11	METAL CHIP	4.7K	0.5%	1/16W
R225	1-208-699-11	METAL CHIP	4.7K	0.5%	1/16W
R226	1-208-699-11	METAL CHIP	4.7K	0.5%	1/16W
R227	1-208-699-11	METAL CHIP	4.7K	0.5%	1/16W
R229	1-218-965-11	RES-CHIP	10K	5%	1/16W
R230	1-218-973-11	RES-CHIP	47K	5%	1/16W
R231	1-218-973-11	RES-CHIP	47K	5%	1/16W
R232	1-218-965-11	RES-CHIP	10K	5%	1/16W

Ref. No.	Part No.	Description			Remarks
R233	1-218-971-11	RES-CHIP	33K	5%	1/16W
R234	1-218-965-11	RES-CHIP	10K	5%	1/16W
R235	1-216-063-91	RES-CHIP	3.9K	5%	1/10W
R236	1-216-063-91	RES-CHIP	3.9K	5%	1/10W
R237	1-218-971-11	RES-CHIP	33K	5%	1/16W
R239	1-218-977-11	RES-CHIP	100K	5%	1/16W
R240	1-218-977-11	RES-CHIP	100K	5%	1/16W
R241	1-218-973-11	RES-CHIP	47K	5%	1/16W
R242	1-218-975-11	RES-CHIP	68K	5%	1/16W
R300	1-216-049-91	RES-CHIP	1K	5%	1/10W
R301	1-216-049-91	RES-CHIP	1K	5%	1/10W
R302	1-216-049-91	RES-CHIP	1K	5%	1/10W
R303	1-216-049-91	RES-CHIP	1K	5%	1/10W
R304	1-216-049-91	RES-CHIP	1K	5%	1/10W
R305	1-216-049-91	RES-CHIP	1K	5%	1/10W
R306	1-216-013-00	METAL CHIP	33	5%	1/10W
R307	1-216-003-11	RES-CHIP	12	5%	1/10W
R308	1-216-295-91	SHORT	0		
R309	1-216-027-00	METAL CHIP	120	5%	1/10W
R310	1-216-027-00	METAL CHIP	120	5%	1/10W
R311	1-220-222-11	RES-CHIP	4.7K	5%	1/2W
R312	1-218-977-11	RES-CHIP	100K	5%	1/16W
R313	1-218-977-11	RES-CHIP	100K	5%	1/16W
R314	1-208-699-11	METAL CHIP	4.7K	0.5%	1/16W
R315	1-208-699-11	METAL CHIP	4.7K	0.5%	1/16W
R316	1-218-978-11	METAL CHIP	120K	0.5%	1/16W
R319	1-208-687-11	METAL CHIP	1.5K	0.5%	1/16W
R320	1-208-671-11	METAL CHIP	330	0.5%	1/16W
R321	1-218-887-11	METAL CHIP	47K	0.5%	1/16W
R322	1-208-699-11	METAL CHIP	4.7K	0.5%	1/16W
R323	1-208-721-11	METAL CHIP	39K	0.5%	1/16W
R324	1-208-699-11	METAL CHIP	4.7K	0.5%	1/16W
R325	1-208-699-11	METAL CHIP	4.7K	0.5%	1/16W
R326	1-208-699-11	METAL CHIP	4.7K	0.5%	1/16W
R327	1-208-699-11	METAL CHIP	4.7K	0.5%	1/16W
R328	1-218-971-11	RES-CHIP	33K	5%	1/16W
R329	1-218-965-11	RES-CHIP	10K	5%	1/16W
R330	1-218-973-11	RES-CHIP	47K	5%	1/16W
R331	1-218-975-11	RES-CHIP	68K	5%	1/16W
R332	1-218-965-11	RES-CHIP	10K	5%	1/16W
R333	1-216-063-91	RES-CHIP	3.9K	5%	1/10W
R334	1-218-971-11	RES-CHIP	33K	5%	1/16W
R335	1-218-973-11	RES-CHIP	47K	5%	1/16W
R336	1-218-973-11	RES-CHIP	47K	5%	1/16W
R337	1-218-965-11	RES-CHIP	10K	5%	1/16W
R338	1-216-063-91	RES-CHIP	3.9K	5%	1/10W
R339	1-218-977-11	RES-CHIP	100K	5%	1/16W
R340	1-218-977-11	RES-CHIP	100K	5%	1/16W

A-7074-468-A XS-001 BOARD, COMPLETE
****

(Ref.No.;30000Series)

< CONNECTOR >

CN100	1-766-343-21	CONNECTOR, FFC/FPC 13P
CN101	1-779-332-11	CONNECTOR, FFC/FPC 16P
CN102	1-779-332-11	CONNECTOR, FFC/FPC 16P
CN103	1-779-334-11	CONNECTOR, FFC/FPC 20P

Ref. No.	Part No.	Description	Remarks
		< SWITCH >	
S100	1-571-640-11	SWITCH, SLIDE (CH1 48V)	
S102	1-762-824-11	SWITCH, SLIDE (OUTPUT SEL)	
S103	1-762-825-11	SWITCH, SLIDE (CH1 SEL)	
S104	1-762-825-11	SWITCH, SLIDE (CH2 SEL)	
S105	1-571-640-11	SWITCH, SLIDE (CH2 48V)	
		MISCELLANEOUS	
		**********	
1	1-678-055-21	FP-187 FLEXIBLE BOARD	
8	1-678-057-21	FP-189 FLEXIBLE BOARD	
14	1-678-067-21	FP-200 FLEXIBLE BOARD	
65	1-678-054-21	FP-186 FLEXIBLE BOARD	
67	1-678-059-21	FP-191 FLEXIBLE BOARD	
74	1-469-830-11	FILTER, EMI (US)	
122	1-476-075-21	SWITCH BLOCK, CONTROL (PS-4980)	
123	1-476-025-21	SWITCH BLOCK, CONTROL (CF-4980)	
153	1-678-063-21	FP-196 FLEXIBLE BOARD	
⚠163	1-418-876-11	TRANSFORMER UNIT, INVERTER	
164	1-678-062-11	FP-195 FLEXIBLE BOARD	
203	1-960-558-11	HARNESS (CP-094) (14P)	
204	1-960-557-11	HARNESS (CP-093) (8P)	
205	1-476-183-11	SWITCH BLOCK, CONTROL (ED-4980)	
212	1-678-064-21	FP-197 FLEXIBLE BOARD	
234	1-678-061-21	FP-194 FLEXIBLE BOARD	
267	1-678-049-11	FP-202 FLEXIBLE BOARD	
274	1-469-829-11	CORE, FERRITE (US)	
276	1-678-051-11	FP-216 FLEXIBLE BOARD	
280	1-678-052-11	FP-217 FLEXIBLE BOARD	
281	1-678-053-11	FP-218 FLEXIBLE BOARD	
307	1-678-058-11	FP-190 FLEXIBLE BOARD	
310	1-694-411-11	TERMINAL BOARD, BATTERY	
312	1-794-637-11	CONNECTOR, DC-IN	
322	1-469-829-11	CORE, FERRITE (US)	
356	1-678-060-11	FP-193 FLEXIBLE BOARD	
408	1-678-056-21	FP-188 FLEXIBLE BOARD	
413	1-960-654-11	HARNESS, CJ-064	
454	A-7031-100-A	PRISM ASSY (SERVICE)(INCLUDE 3CCD)(US)	
454	A-7031-101-A	PRISM ASSY (SERVICE)(INCLUDE 3CCD)(AEP)	
458	1-758-419-21	LENS, ZOOM (VCL-6012WC)	
812	1-657-785-11	FP-248 FLEXIBLE BOARD (DEW SENSOR)	
CN901	1-784-723-11	PIN, CONNECTOR 4P	
D901	8-719-067-13	DIODE GL453K	
H901	8-719-061-28	DIODE HW-105C-FT-V (S REEL)	
H902	8-719-061-28	DIODE HW-105C-FT-V (T REEL)	
LCD901	8-753-050-52	ACX300CK-J	
LCD902	A-7096-156-A	PANEL BLOCK ASSY, INDICATION	
LCD903	8-753-026-79	LCX033AL-J	
M901	A-4900-081-A	DRUM ASSY (DEH-14B/J-RP)	
M902	8-835-606-01	MOTOR, DC SCD15A/C-NP (CAPSTAN)	
M903	X-3948-346-1	MOTOR ASSY, LOADING	
⚠ND901	1-517-931-11	TUBE, FLUORESCENT,COLD CATHODE	
Q901	8-729-907-25	PHOTO TRANSISTOR PT4850F (TAPE END)	
Q902	8-729-907-25	PHOTO TRANSISTOR PT4850F (TAPE TOP)	
S901	1-771-039-51	SWITCH, PUSH (CASSETTE IN)	
S902	1-572-719-32	SWITCH, PUSH (1 KEY) (REC PROOF)	
S903	1-771-325-11	ENCODER, ROTARY (SWITCH) (MODE)	
SP901	1-529-590-11	SPEAKER (2.0CM)	

Ref. No.	Part No.	Description	Remarks
		ACCESSORIES	
		**********	
⚠	1-475-599-11	ADAPTOR, AC (AC-L10)	
	1-475-950-21	REMOTE COMMANDER (RMT-811)	
	1-575-334-11	CORD, CONNECTION (AV CABLE)	
⚠	1-690-827-11	CORD SET, POWER (AEP)	
⚠	1-775-843-21	CORD, POWER (WITH FILTER)(AEP)	
⚠	1-790-107-22	CORD, POWER (US)	
	1-792-826-11	CORD, CONNECTION (USB CABLE)	
	3-053-056-01	LID, BATTERY CASE	
	3-060-458-11	MANUAL, INSTRUCTION (PICTURE GEAR 4.1 LITE)(ENGLISH/RUSSIAN)	
	3-060-458-21	MANUAL, INSTRUCTION (PICTURE GEAR 4.1 LITE)(FRENCH/GERMAN)	
	3-060-458-31	MANUAL, INSTRUCTION (PICTURE GEAR 4.1 LITE)(ITALIAN/DUTCH)(AEP)	
	3-060-476-01	PICTURE GEAR 4.1 LITE(SYSTEM DISK)	
	3-060-676-01	EYE CUP, LARGE	
	3-060-817-11	MANUAL, INSTRUCTION (ENGLISH)(PD150) (US)	
	3-060-817-21	MANUAL, INSTRUCTION (FRENCH)(PD150) (US)	
	3-060-817-31	MANUAL, INSTRUCTION (ENGLISH)(PD150P) (AEP)	
	3-060-817-41	MANUAL, INSTRUCTION (FRENCH)(PD150P) (AEP)	
	3-060-817-51	MANUAL, INSTRUCTION (GERMAN)(PD150P) (AEP)	
	3-060-817-61	MANUAL, INSTRUCTION (ITALIAN)(PD150P) (AEP)	
	3-061-238-11	MANUAL, INSTRUCTION (MSAC-US1) (ENGLISH/FRENCH)	
	3-061-238-21	MANUAL, INSTRUCTION (MSAC-US1) (GERMAN/SPANISH/DUTCH/SWEDISH/ITALIAN/PORTUGUESE/ RUSSIAN/ARABIC/TRADITIONAL CHINESE/KOREAN/DANISH/ FINNISH)(AEP)	
	3-061-255-01	SYSTEM DISK (MSAC-US1)	
	3-062-061-11	MANUAL, INSTRUCTION (AUTO LOGO INSERT FOR CORYRIGHT PROTECTION) (ENGLISH/FRENCH/GERMAN/ITALIAN)	
	3-987-015-01	BELT (S), SHOULDER	
	A-7033-740-A	MEMORY STICK MSA-4A	
	A-7094-140-A	NP-F330 BATTERY PACK (US)	
	A-7094-141-A	NP-F330 BATTERY PACK (AEP)	
	A-7096-180-A	MSAC-US1 MEMORY STICK READER/WRITER	

Be sure to read “Precautions upon replacing CCD imager” on page 4-9 when changing the CCD imager.

Note :	Note :
The components identified by mark ⚠ or dotted line with mark ⚠ are critical for safety. Replace only with part number specified.	Les composants identifiés par une marque ⚠ sont critiques pour la sécurité. Ne les remplacer que par une pièce portant le numéro spécifié.

⟨FOR CAMERA COLOR REPRODUCTION ADJUSTMENT⟩

Take a copy of CAMERA COLOR REPRODUCTION FRAME with a clear sheet for use.

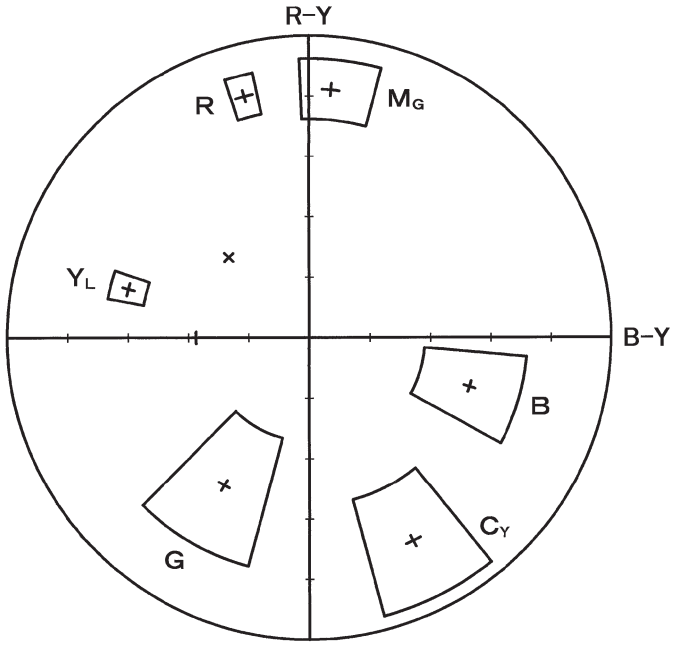

DSR-PD150/PD150P

2004G1600-1
©2004.7
Published by DI Technical Support Section

DSR-PD150/PD150P

RMT-811

SONY

US Model
Canadian Model
DSR-PD150
AEP Model
DSR-PD150P

SERVICE MANUAL

2000. 11

SUPPLEMENT-1

File this supplement-1 with the Service Manual.
(PV00-019)

Subject:
- Change of Self-Diagnosis code table
- Change of Adjusting item
- Change of Adjustments
- Added of Supplied parts

SELF-DIAGNOSIS FUNCTION

4. SELF-DIAGNOSIS CODE TABLE (Refer to page 9)

: Added portion.
: Changed portion.

Self-diagnosis Code						
Repaired by:	Block Function		Detailed Code		Symptom/State	Correction
C	3	1	3	0	FG fault when starting capstan.	Load the tape again, and perform operations from the beginning.
C	3	1	4	0	FG fault when starting drum.	Load the tape again, and perform operations from the beginning.
C	3	1	4	2	FG fault during normal drum operations.	Load the tape again, and perform operations from the beginning.
C	3	1	9	7	Mechanical position fault.	Load the tape again, and perform operations from the beginning.
C	3	1	9	8	Mechanical position fault.	Load the tape again, and perform operations from the beginning.
C	3	1	9	9	Mechanical position fault.	Load the tape again, and perform operations from the beginning.
C	3	2	1	0	LOAD direction loading motor time-out.	Remove the battery or power cable, connect, and perform operations from the beginning.
C	3	2	1	1	UNLOAD direction loading motor time-out.	Remove the battery or power cable, connect, and perform operations from the beginning.
C	3	2	2	0	T reel side tape slacking when unloading.	Remove the battery or power cable, connect, and perform operations from the beginning.
C	3	2	2	1	Winding S reel fault when counting the rest of tape.	Remove the battery or power cable, connect, and perform operations from the beginning.
C	3	2	2	2	T reel fault.	Remove the battery or power cable, connect, and perform operations from the beginning.
C	3	2	2	3	S reel fault.	Remove the battery or power cable, connect, and perform operations from the beginning.
C	3	2	2	4	T reel fault.	Remove the battery or power cable, connect, and perform operations from the beginning.
C	3	2	3	0	FG fault when starting capstan.	Remove the battery or power cable, connect, and perform operations from the beginning.
C	3	2	4	0	FG fault when starting drum	Remove the battery or power cable, connect, and perform operations from the beginning.
C	3	2	4	2	FG fault during normal drum operations	Remove the battery or power cable, connect, and perform operations from the beginning.
C	3	2	9	7	Mechanical position fault.	Remove the battery or power cable, connect, and perform operations from the beginning.
C	3	2	9	8	Mechanical position fault.	Remove the battery or power cable, connect, and perform operations from the beginning.
C	3	2	9	9	Mechanical position fault.	Remove the battery or power cable, connect, and perform operations from the beginning.
E	6	1	0	0	Difficult to adjust focus (Cannot initialize focus.)	Inspect the lens block focus reset sensor (Pin ㉕ of LA-026 board) when focusing is performed when the control dial is rotated in the focus manual mode, and the focus motor drive circuit (IC140 of LA-026 board) when the focusing is not performed.

SECTION 5. ADJUSTMENTS

: Added portion.
: Changed portion.
: Deleted portion.

1-1. Adjusting items when replacing main parts and boards. (Refer to page 5-2)

• Adjusting items when replacing main parts

When replacing main parts, adjust the items indicated by ● in the following table.

Adjustment Section	Adjustment	Replaced parts: Block replacement											Parts replacement															
		Lens device	Prism assy (Including 3 CCD imagers)	VAP unit	Mechanism deck	EVF block LCD902 (LCD panel)	LCD block LCD901 (LCD panel)	LCD block ND901 (Fluorescent tube)	LCD block Inverter unit	Control switch (CF-4980)	Mechanism deck M901 (Drum motor)	Mechanism deck M902 (Capstan motor)	FP-594 board H902 (T reel FG sensor)	SE-108 board SE600 to 603 (PITCH/YAW sensor)	PD-126 board IC2101 (RGB driver (LCD))	PD-126 board IC2103 (Timing generator (LCD))	LB-065 board ND200 (Fluorescent tube (EVF))	VC-242 board IC1802 (RGB driver (EVF))	VC-242 board IC1803 (Timing generator (EVF))	VC-242 board IC705, X701 (Timing generator)	VC-242 board IC704 (S/H, AGC)	VC-242 board IC706 (A/D converter)	VC-242 board IC802 (Camera micro processor)	VC-242 board IC1301 (LINE IN/OUT amp)	VC-242 board IC301 (DV signal process)	VC-242 board IC101 (EQ, A/D CONV., PLL)	VC-242 board IC102 (REC/PB amp)	VC-242 board IC803 (EVR)
Camera	27MHz origin oscillation adj.																			●								●
	Zoom key center adj.									●																		
	HALL adj.	●	●																									
	Offset adj.		●																		●	●						
	Flange back adj.	●	●																									
	Pre-white balance data input	●	●																		●	●						
	AWB standard data input	●	●																		●	●						
	MAX GAIN adj.	●	●																		●	●						
	LV standard data input	●	●																		●	●						
	White balance ND filter 1 compensation	●	●																		●	●						

Table. 5-1-1(1).

Page	Before change	After change
5-22	**1-3. CAMERA SYSTEM ADJUSTMENTS** **9. Pre White Balance Data Input**	

Before change — Adjusting method:

Order	Page	Address	Data	Procedure
7	6	01	7F	Set the data, and press PAUSE button.
8	6	01	7D	Set the data, and press PAUSE button. (Note)
9	6	02		Check that the data changes to “01”.

After change — Adjusting method:

Order	Page	Address	Data	Procedure
7	F	16		Set the following data, and press PAUSE button. 03 (NTSC), 83 (PAL)
8	6	01	7F	Set the data, and press PAUSE button.
9	6	01	7D	Set the data, and press PAUSE button. (Note)
10	6	02		Check that the data changes to “01”.

Before change — Processing after Completing Adjustments

Order	Page	Address	Data	Procedure
3	0	01	00	Set the data.
4				Perform “Auto White Balance Standard Data Input”.

After change — Processing after Completing Adjustments

Order	Page	Address	Data	Procedure
3	F	16		Set the following data, and press PAUSE button. 13 (NTSC), 93 (PAL)
4	0	01	00	Set the data.
5				Perform “Auto White Balance Standard Data Input”.

: Added portion. : Changed portion.

Page 5-27

1-3. CAMERA SYSTEM ADJUSTMENTS

19. White Balance Check

Before change

Checking method:

Order	Page	Address	Data	Procedure
13	F	11	04	Set the data, and press PAUSE button.
14	1			Check that the second digit of the display data (Note) is an odd number. Specified value: 1 : XX : XX └── Odd number
15	6	04	C6	Set the data.

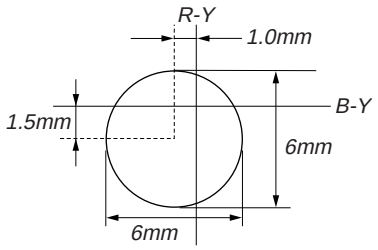

Fig. 5-1-12. (B)

After change

Checking method:

Order	Page	Address	Data	Procedure
13	F	11	04	Set the data, and press PAUSE button.
14	1			Check that the second digit of the display data (Note) is "1". Specified value: 1 : XX : XX └── 1
15	6	04	06	Set the data.

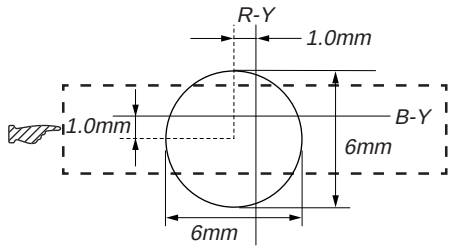

Fig. 5-1-12. (B)

Page 5-61

3-2. SYSTEM CONTROL SYSTEM ADJUSTMENT

2-2. Serial No. Input

Before change

Input method:

1) Select page: 0, address: 01, and set data: 01.
2) Read the serial No. on the name plate, and take it as D_1.
   Example: If the serial No. is 77881.
   D_1=77881
3) Obtain D_2 and H_1 corresponding to D_1 from Table 5-3-2.
   Example: If D_1 is "77881".
   $D_2=D_1-65536=12345$
   H_1=FE

After change

Input method:

1) Select page: 0, address: 01, and set data: 01.
2) Read the serial No. on the name plate, and take it as D_1.
   Example: If the serial No. is 77881.
   D_1=77881

   Note: Use six digits of the low rank when a serial No. is more than seven digits.
3) Obtain D_2 and H_1 corresponding to D_1 from Table 5-3-2.
   Example: If D_1 is "77881".
   $D_2=D_1-65536=12345$
   H_1=FE

SECTION 6. REPAIR PARTS LIST

6-1. EXPLODED VIEWS

☞ : Added portion.

Page	Before change	After change
6-6	**6-1-6. UPPER HANDLE SECTION**	
	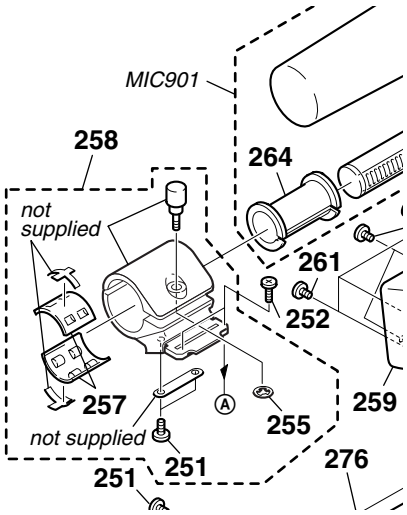	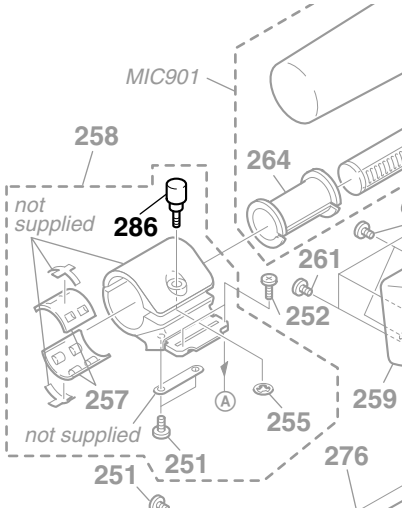
	Ref. No. / Part No. / Description / Remarks 284 / 3-969-037-02 / EMBLEM (NO.3), SONY 285 / X-3950-603-1 / CABINET (L) ASSY, HANDLE MIC901 / 8-814-298-90 / ECM-NV1	Ref. No. / Part No. / Description / Remarks 284 / 3-969-037-02 / EMBLEM (NO.3), SONY 285 / X-3950-603-1 / CABINET (L) ASSY, HANDLE * 286 / 3-686-276-01 / SCREW (M5) ☞ MIC901 / 8-814-298-90 / ECM-NV1
6-8	**6-1-8. EVF SECTION**	
	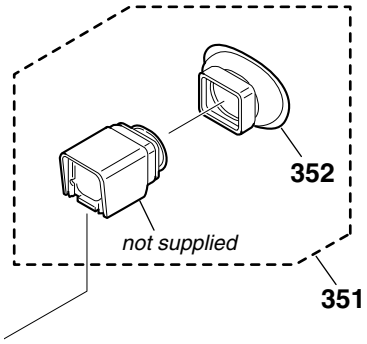	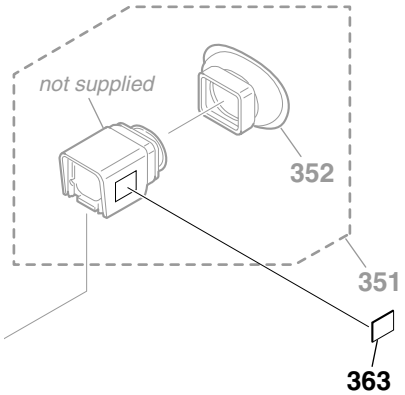
	Ref. No. / Part No. / Description / Remarks 362 / 3-060-674-01 / CABINET (UPPER), EVF FRONT LCD903 / 8-753-026-79 / LCX033AL-J	Ref. No. / Part No. / Description / Remarks 362 / 3-060-674-01 / CABINET (UPPER), EVF FRONT * 363 / 3-061-309-01 / LABEL, PBW VF ☞ LCD903 / 8-753-026-79 / LCX033AL-J

2002C1600-1
©2002.3
Published by DI Customer Center

Ver 1.5 2002. 11

DSR-PD150/PD150P

RMT-811

SONY

US Model
Canadian Model
DSR-PD150
AEP Model
DSR-PD150P

SERVICE MANUAL

2001. 03

SUPPLEMENT-2

File this supplement-2 with the Service Manual.
(PV01-001)

Subject: Addtion of retainer holder

• Refer to Supplement-1 (9-929-824-81) together with the original Service manual (9-929-824-11) for parts details.

SECTION 6. REPAIR PARTS LIST

6-1. EXPLODED VIEWS

: Added portion.

Page	Before change	After change
Original 6-6 Supple-ment-1 5	**6-1-6. UPPER HANDLE SECTION**	

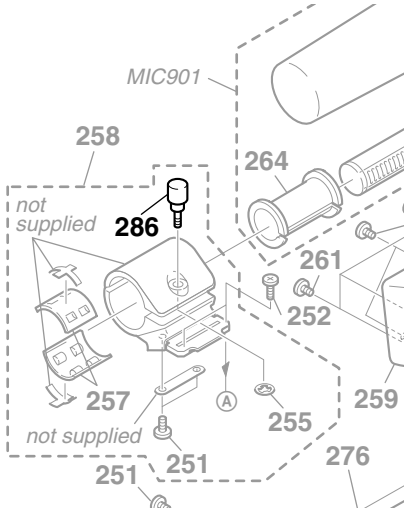

Ref. No.	Part No.	Description	Remarks
285	X-3950-603-1	CABINET (L) ASSY, HANDLE	
* 286	3-686-276-01	SCREW (M5)	
MIC901	8-814-298-90	ECM-NV1	

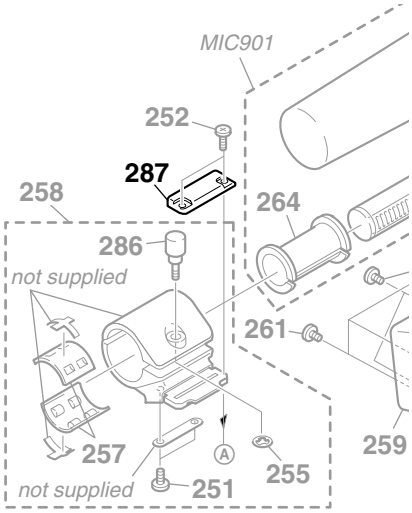

Ref. No.	Part No.	Description	Remarks
285	X-3950-603-1	CABINET (L) ASSY, HANDLE	
* 286	3-686-276-01	SCREW (M5)	
287	3-064-629-01	RETAINER (UPPER), HOLDER	
MIC901	8-814-298-90	ECM-NV1	

9-929-824-82

Sony EMCS Co.

2002C1600-1

©2002.3

Published by DI Customer Center

DSR-PD150/PD150P

RMT-811

SONY

US Model
Canadian Model
DSR-PD150
AEP Model
Chinese Model
DSR-PD150P

SERVICE MANUAL

Ver 1.6 2003. 01

SUPPLEMENT-3

File this supplement-3 with the Service Manual.
(PV02-009)

Subject: • Addtion of Chinese Model
• Addtion of Supplied parts

• Refer to Supplement-1 (9-929-824-82) together with the original Service manual (9-929-824-11) for parts details.

SECTION 6. REPAIR PARTS LIST

6-1. EXPLODED VIEWS

: Added portion.

Page	Before change	After change
Original 6-2	**6-1-2. OVERALL SECTION-2** 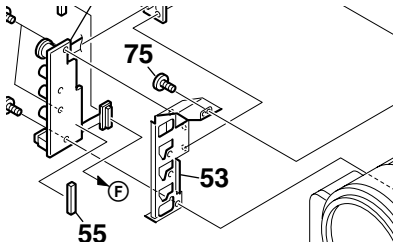 	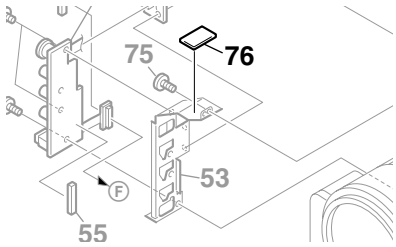 Ref. No. Part No. Description Remarks * 76 3-062-739-01 SHEET (C), ABSORBING
Original 6-4	**6-1-4. CABINET (R) SECTION-1** 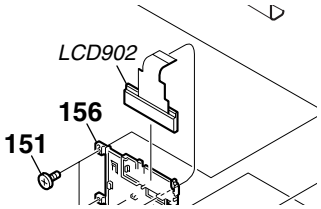 	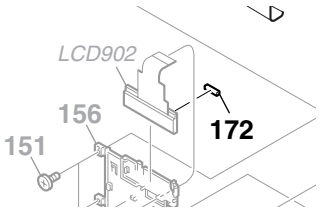 Ref. No. Part No. Description Remarks * 172 3-063-148-01 FOAM (SMALL), DUST PROTECTION

6-1. EXPLODED VIEWS

: Added portion.

Page	Before change	After change
Original 6-6	**6-1-6. UPPER HANDLE SECTION** 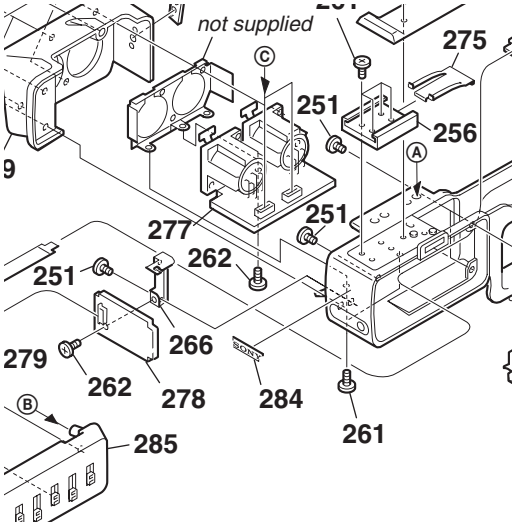 	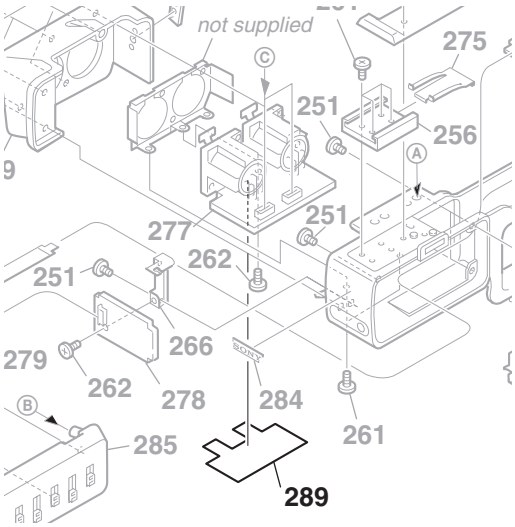 Ref. No. Part No. Description Remarks * 289 3-063-408-01 SHEET, XLR

6-2. ELECTRICAL PARTS LIST

: Changed portion : Added portion.

Page	Before change	After change
Original 6-36	Ref. No. / Part No. / Description / Remarks ⚠ 1-475-599-11 ADAPTOR, AC (AC-L10) 1-475-950-21 REMOTE COMMANDER (RMT-811) 1-575-334-11 CORD, CONNECTION (AV CABLE) ⚠ 1-690-827-11 CORD SET, POWER (AEP) ⚠ 1-775-843-21 CORD, POWER (WITH FILTER)(AEP) ⚠ 1-790-107-22 CORD, POWER (US) 1-792-826-11 CORD, CONNECTION (USB CABLE) 3-053-056-01 LID, BATTERY CASE 3-060-458-11 MANUAL, INSTRUCTION (PICTURE GEAR 4.1 LITE)(ENGLISH/RUSSIAN) 3-060-458-21 MANUAL, INSTRUCTION (PICTURE GEAR 4.1 LITE)(FRENCH/GERMAN) 3-060-458-31 MANUAL, INSTRUCTION (PICTURE GEAR 4.1 LITE)(ITALIAN/DUTCH)(AEP) 3-060-476-01 PICTURE GEAR 4.1 LITE(SYSTEM DISK) 3-060-676-01 EYE CUP, LARGE 3-060-817-11 MANUAL, INSTRUCTION (ENGLISH)(PD150)(US) 3-060-817-21 MANUAL, INSTRUCTION (FRENCH)(PD150)(US) 3-060-817-31 MANUAL, INSTRUCTION (ENGLISH)(PD150P)(AEP) 3-060-817-41 MANUAL, INSTRUCTION (FRENCH)(PD150P)(AEP) 3-060-817-51 MANUAL, INSTRUCTION (GERMAN)(PD150P)(AEP) 3-060-817-61 MANUAL, INSTRUCTION (ITALIAN)(PD150P)(AEP) 3-061-238-11 MANUAL, INSTRUCTION (MSAC-US1) (ENGLISH/FRENCH) 3-061-238-21 MANUAL, INSTRUCTION (MSAC-US1) (GERMAN/SPANISH/DUTCH/SWEDISH/ITALIAN/PORTUGUESE/ RUSSIAN/ARABIC/TRADITIONAL CHINESE/KOREAN/DANISH/ FINNISH)(AEP) 3-061-255-01 SYSTEM DISK (MSAC-US1) 3-062-061-11 MANUAL, INSTRUCTION (AUTO LOGO INSERT FOR CORYRIGHT PROTECTION) (ENGLISH/FRENCH/GERMAN/ITALIAN) 3-987-015-01 BELT (S), SHOULDER A-7033-740-A MEMORY STICK MSA-4A A-7094-140-A NP-F330 BATTERY PACK (US) A-7094-141-A NP-F330 BATTERY PACK (AEP) A-7096-180-A MSAC-US1 MEMORY STICK READER /WRITER	Ref. No. / Part No. / Description / Remarks ⚠ 1-475-599-11 ADAPTOR, AC (AC-L10) ⚠ 1-475-599-14 ADAPTOR, AC (AEP) 1-475-950-21 REMOTE COMMANDER (RMT-811) ⚠ 1-475-599-82 ADAPTOR, AC (CH) *⚠ 1-575-131-11 CORD, POWER (AEP) 1-575-334-11 CORD, CONNECTION (AV CABLE) ⚠ 1-690-827-11 CORD SET, POWER (AEP) ⚠ 1-775-843-21 CORD, POWER (WITH FILTER)(AEP) ⚠ 1-782-476-11 CORD, POWER (CH) ⚠ 1-790-107-22 CORD, POWER (US) 1-792-826-11 CORD, CONNECTION (USB CABLE) 3-053-056-01 LID, BATTERY CASE 3-060-458-11 MANUAL, INSTRUCTION (PICTURE GEAR 4.1 LITE)(ENGLISH/RUSSIAN) 3-060-458-21 MANUAL, INSTRUCTION (PICTURE GEAR 4.1 LITE)(FRENCH/GERMAN) 3-060-458-31 MANUAL, INSTRUCTION (PICTURE GEAR 4.1 LITE)(ITALIAN/DUTCH)(AEP) 3-060-476-01 PICTURE GEAR 4.1 LITE(SYSTEM DISK) 3-060-676-01 EYE CUP, LARGE 3-060-817-16 MANUAL, INSTRUCTION (ENGLISH)(PD150)(US) 3-060-817-26 MANUAL, INSTRUCTION (FRENCH)(PD150)(US) 3-060-817-34 MANUAL, INSTRUCTION (ENGLISH)(PD150P)(AEP) 3-060-817-44 MANUAL, INSTRUCTION (FRENCH)(PD150P)(AEP) 3-060-817-54 MANUAL, INSTRUCTION (GERMAN)(PD150P)(AEP) 3-060-817-64 MANUAL, INSTRUCTION (ITALIAN)(PD150P)(AEP) 3-062-061-12 MANUAL, INSTRUCTION (AUTO LOGO INSERT FOR CORYRIGHT PROTECTION) (ENGLISH/FRENCH/GERMAN/ITALIAN) 3-078-362-11 MANUAL, INSTRUCTION (ENGLISH/FRENCH/GERMAN)(PD150P)(AEP) 3-082-346-01 MANUAL, INSTRUCTION (CHINESE)(PD150P)(CH) 3-987-015-01 BELT (S), SHOULDER A-7013-113-A OVERALL ASSY (MSAC-US2) A-7033-740-A MEMORY STICK MSA-4A A-7094-140-A NP-F330 BATTERY PACK (US) A-7094-141-A NP-F330 BATTERY PACK (AEP)

2003A1600-1
©2003.1
Published by DI Customer Center

9-929-824-83

Sony EMCS Co.

DSR-PD150/PD150P

RMT-811

SONY

US Model
Canadian Model
DSR-PD150
AEP Model
Chinese Model
DSR-PD150P

SERVICE MANUAL

Ver 1.6 2003. 01

SUPPLEMENT-3

File this supplement-3 with the Service Manual.
(PV02-009)

Subject: • Addtion of Chinese Model
• Addtion of Supplied parts

• Refer to Supplement-1 (9-929-824-82) together with the original Service manual (9-929-824-11) for parts details.

SECTION 6. REPAIR PARTS LIST

6-1. EXPLODED VIEWS

: Added portion.

Page	Before change	After change
Original 6-2	**6-1-2. OVERALL SECTION-2** 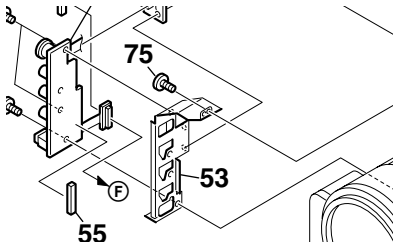 	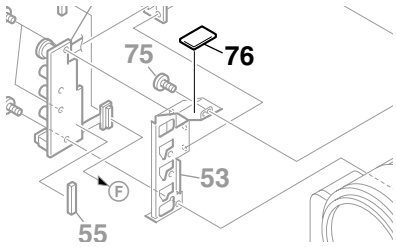 Ref. No. Part No. Description Remarks * 76 3-062-739-01 SHEET (C), ABSORBING
Original 6-4	**6-1-4. CABINET (R) SECTION-1** 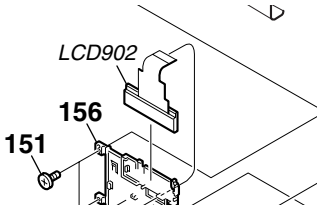 	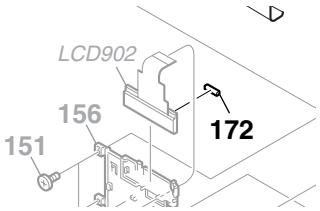 Ref. No. Part No. Description Remarks * 172 3-063-148-01 FOAM (SMALL), DUST PROTECTION

6-1. EXPLODED VIEWS

: Added portion.

Page	Before change	After change
Original 6-6	**6-1-6. UPPER HANDLE SECTION** 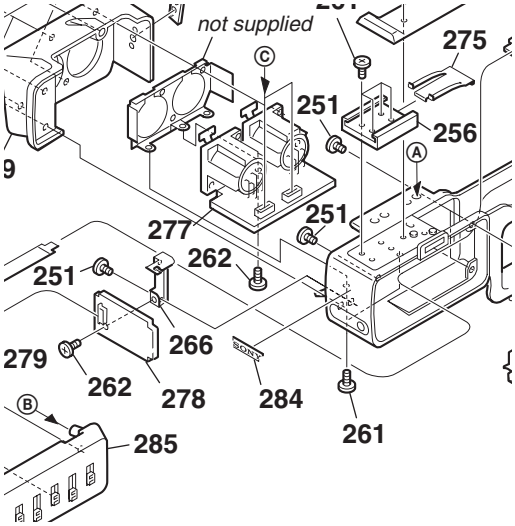 	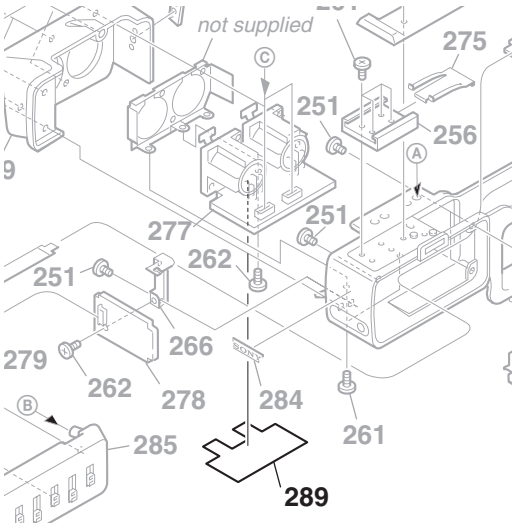 Ref. No. Part No. Description Remarks * 289 3-063-408-01 SHEET, XLR

6-2. ELECTRICAL PARTS LIST

: Changed portion : Added portion.

Page	Before change	After change
Original 6-36	Ref. No. / Part No. / Description / Remarks ⚠ 1-475-599-11 ADAPTOR, AC (AC-L10) 1-475-950-21 REMOTE COMMANDER (RMT-811) 1-575-334-11 CORD, CONNECTION (AV CABLE) ⚠ 1-690-827-11 CORD SET, POWER (AEP) ⚠ 1-775-843-21 CORD, POWER (WITH FILTER)(AEP) ⚠ 1-790-107-22 CORD, POWER (US) 1-792-826-11 CORD, CONNECTION (USB CABLE) 3-053-056-01 LID, BATTERY CASE 3-060-458-11 MANUAL, INSTRUCTION (PICTURE GEAR 4.1 LITE)(ENGLISH/RUSSIAN) 3-060-458-21 MANUAL, INSTRUCTION (PICTURE GEAR 4.1 LITE)(FRENCH/GERMAN) 3-060-458-31 MANUAL, INSTRUCTION (PICTURE GEAR 4.1 LITE)(ITALIAN/DUTCH)(AEP) 3-060-476-01 PICTURE GEAR 4.1 LITE(SYSTEM DISK) 3-060-676-01 EYE CUP, LARGE 3-060-817-11 MANUAL, INSTRUCTION (ENGLISH)(PD150)(US) 3-060-817-21 MANUAL, INSTRUCTION (FRENCH)(PD150)(US) 3-060-817-31 MANUAL, INSTRUCTION (ENGLISH)(PD150P)(AEP) 3-060-817-41 MANUAL, INSTRUCTION (FRENCH)(PD150P)(AEP) 3-060-817-51 MANUAL, INSTRUCTION (GERMAN)(PD150P)(AEP) 3-060-817-61 MANUAL, INSTRUCTION (ITALIAN)(PD150P)(AEP) 3-061-238-11 MANUAL, INSTRUCTION (MSAC-US1) (ENGLISH/FRENCH) 3-061-238-21 MANUAL, INSTRUCTION (MSAC-US1) (GERMAN/SPANISH/DUTCH/SWEDISH/ITALIAN/PORTUGUESE/ RUSSIAN/ARABIC/TRADITIONAL CHINESE/KOREAN/DANISH/ FINNISH)(AEP) 3-061-255-01 SYSTEM DISK (MSAC-US1) 3-062-061-11 MANUAL, INSTRUCTION (AUTO LOGO INSERT FOR CORYRIGHT PROTECTION) (ENGLISH/FRENCH/GERMAN/ITALIAN) 3-987-015-01 BELT (S), SHOULDER A-7033-740-A MEMORY STICK MSA-4A A-7094-140-A NP-F330 BATTERY PACK (US) A-7094-141-A NP-F330 BATTERY PACK (AEP) A-7096-180-A MSAC-US1 MEMORY STICK READER /WRITER	Ref. No. / Part No. / Description / Remarks ⚠ 1-475-599-11 ADAPTOR, AC (AC-L10) ⚠ 1-475-599-14 ADAPTOR, AC (AEP) 1-475-950-21 REMOTE COMMANDER (RMT-811) ⚠ 1-475-599-82 ADAPTOR, AC (CH) *⚠ 1-575-131-11 CORD, POWER (AEP) 1-575-334-11 CORD, CONNECTION (AV CABLE) ⚠ 1-690-827-11 CORD SET, POWER (AEP) ⚠ 1-775-843-21 CORD, POWER (WITH FILTER)(AEP) ⚠ 1-782-476-11 CORD, POWER (CH) ⚠ 1-790-107-22 CORD, POWER (US) 1-792-826-11 CORD, CONNECTION (USB CABLE) 3-053-056-01 LID, BATTERY CASE 3-060-458-11 MANUAL, INSTRUCTION (PICTURE GEAR 4.1 LITE)(ENGLISH/RUSSIAN) 3-060-458-21 MANUAL, INSTRUCTION (PICTURE GEAR 4.1 LITE)(FRENCH/GERMAN) 3-060-458-31 MANUAL, INSTRUCTION (PICTURE GEAR 4.1 LITE)(ITALIAN/DUTCH)(AEP) 3-060-476-01 PICTURE GEAR 4.1 LITE(SYSTEM DISK) 3-060-676-01 EYE CUP, LARGE 3-060-817-16 MANUAL, INSTRUCTION (ENGLISH)(PD150)(US) 3-060-817-26 MANUAL, INSTRUCTION (FRENCH)(PD150)(US) 3-060-817-34 MANUAL, INSTRUCTION (ENGLISH)(PD150P)(AEP) 3-060-817-44 MANUAL, INSTRUCTION (FRENCH)(PD150P)(AEP) 3-060-817-54 MANUAL, INSTRUCTION (GERMAN)(PD150P)(AEP) 3-060-817-64 MANUAL, INSTRUCTION (ITALIAN)(PD150P)(AEP) 3-062-061-12 MANUAL, INSTRUCTION (AUTO LOGO INSERT FOR CORYRIGHT PROTECTION) (ENGLISH/FRENCH/GERMAN/ITALIAN) 3-078-362-11 MANUAL, INSTRUCTION (ENGLISH/FRENCH/GERMAN)(PD150P)(AEP) 3-082-346-01 MANUAL, INSTRUCTION (CHINESE)(PD150P)(CH) 3-987-015-01 BELT (S), SHOULDER A-7013-113-A OVERALL ASSY (MSAC-US2) A-7033-740-A MEMORY STICK MSA-4A A-7094-140-A NP-F330 BATTERY PACK (US) A-7094-141-A NP-F330 BATTERY PACK (AEP)

2003A1600-1
©2003.1
Published by DI Customer Center

9-929-824-83

Sony EMCS Co.

DSR-PD150/PD150P

RMT-811

SONY

US Model
Canadian Model
DSR-PD150
AEP Model
DSR-PD150P

SERVICE MANUAL

Ver 1.7 2003. 03

SUPPLEMENT-4

File this supplement-4 with the Service Manual.
(PV02-013)

IC1301 and C936 to be changed in correct combination.

- Refer to original Service manual (9-929-824-11), Supplement-1 (9-929-824-81), Supplement-2 (9-929-824-82), Supplement-3 (9-929-824-83), Correction-1 (9-929-824-91), Correction-2 (9-929-824-92) for parts details.

- The two types that are A TYPE and B TYPE are used for the parts C936 and IC1301 respectively.
  When these parts are going to be replaced, the A TYPE part should be combined with the A TYPE, and B TYPE should be combined with B TYPE. Do not use A TYPE and B TYPE parts as a combination.

Ref.	A TYPE	B TYPE
C936	1-164-866-11 CERAMIC CHIP 47PF 5% 16V	1-164-864-11 CERAMIC CHIP 39PF 5% 16V
IC1301	8-759-599-37 IC AN2225FHQ-EB	6-701-555-01 IC AN2225NFHQBA

9-929-824-84

Sony EMCS Co.

2003C1600-1
©2003.3
Published by DI Customer Center

DSR-PD150/PD150P

RMT-811

SONY

SERVICE MANUAL

Ver 1.9 2004.07

US Model
Canadian Model
DSR-PD150
AEP Model
Chinese Model
DSR-PD150P

SUPPLEMENT-5

File this supplement-5 with the service manual.
(PV04-010)

- Correction of Self-diagnosis code table
- Correction of Printed wiring board
- Addition of Service part
- Correction of Exploded views

SELF-DIAGNOSIS FUNCTION
4. SELF-DIAGNOSIS CODE TABLE

: Changed portion

Page 9

Before change

Self-diagnosis Code					Symptom/State
Repaired by:	Block Function		Detailed Code		
C	3	1	1	0	LOAD direction loading motor time-out.
C	3	1	1	1	UNLOAD direction loading motor time-out.

After change

Self-diagnosis Code					Symptom/State
Repaired by:	Block Function		Detailed Code		
C	3	2	1	0	LOAD direction loading motor time-out.
C	3	2	1	1	UNLOAD direction loading motor time-out.

Sony EMCS Co.

2004G1600-1
©2004.7
Published by DI Technical Support Section

SECTION 4 PRINTED WIRING BOARDS AND SCHEMATIC DIAGRAMS

4-2. PRINTED WIRING BOARDS AND SCHEMATIC DIAGRAMS

: Changed portion

Page	Before change	After change
4-55	**JK-190 BOARD (SIDE A)** 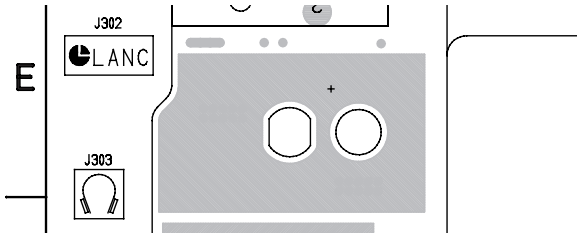	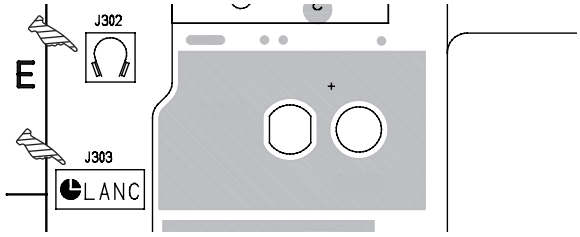

SECTION 6 REPAIR PARTS LIST

6-1. EXPLODED VIEWS

: Changed portion : Added portion : Deleted portion

Page	Before change	After change
6-3	**6-1-3. CABINET (L) SECTION** 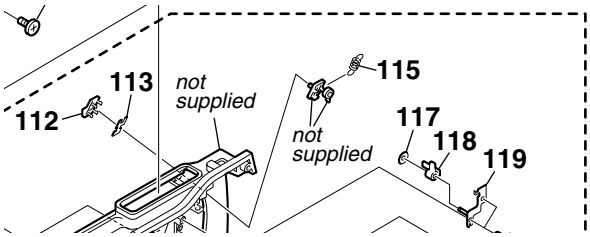 Ref. No. Part No. Description — — — — — —	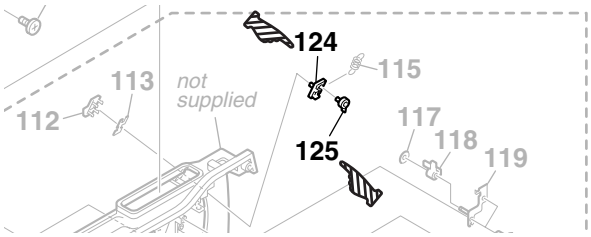 Ref. No. Part No. Description 124 3-060-552-01 LOCK, EJECT 125 3-060-543-01 COVER, EJECT
6-6	**6-1-6. UPPER HANDLE SECTION** 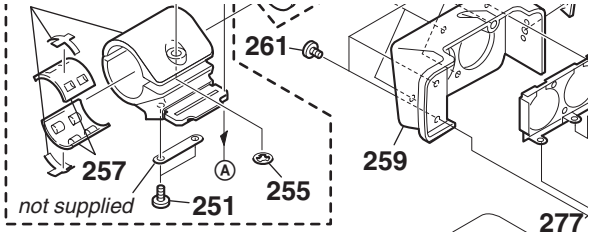 — — —	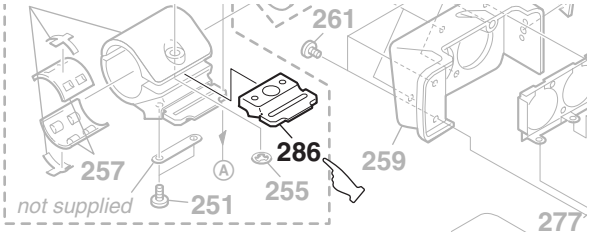 286 3-060-810-01 BASE, MICROPHONE HOLDER
6-10	**6-1-10. LENS BLOCK SECTION** 460 3-709-595-11 VAP ASSY (B114B)	460 3-709-595-12 VAP ASSY (B114B)
6-12	**6-1-12. TAPE GUIDE, PINCH SLIDER ASSEMBLY AND BRAKE SLIDER ASSEMBLY** 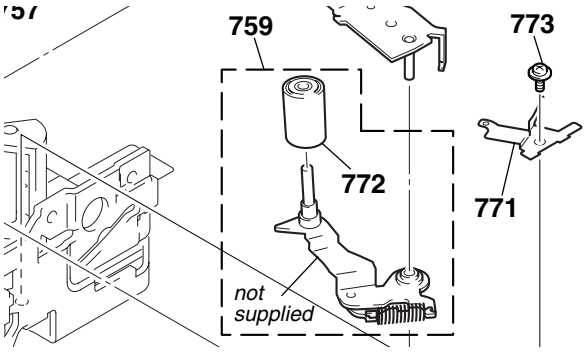 772 X-3748-630-2 ROLLER ASSY, (DIA.5.6) PINCH	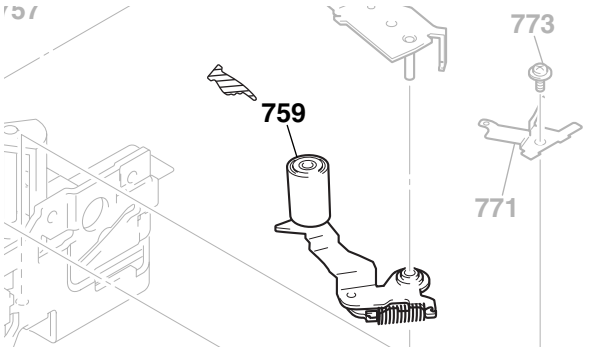 — — —

Revision History

Ver.	Date	History	Contents	S.M. Rev. issued
1.0	2000.05	Official Release	—	—
1.1	2000.11	Supplement-1	• Change of Self-Diagnosis code table • Change of Adjusting item • Change of Adjustments • Added of Supplied parts	No
1.2	2001.03	Supplement-2	Addtion of retainer holder	No
1.3	2002.03	Correction-1	Change of service part supply category. S.M. correction: Page 6-6 Supplement-1 correction: Page 5 Supplement-2 correction: Page 1	Yes
1.4	2002.06	Correction-2	Change of service part supply category. S.M. correction: Page 6-6 Supplement-1 correction: Page 5 Supplement-2 correction: Page 1 Correction-1 correction: Page 1	Yes
1.5	2002.11	Correction-3	Change of part form and addition of not supplied. S.M. correction: Page 6-6, 6-13 Supplement-1 correction: Page 5 Supplement-2 correction: Page 1 Correction-1 correction: Page 1	Yes
1.6	2003.01	Supplement-3	• Addtion of Chinese Model • Addtion of Supplied parts	No
1.7	2003.03	Supplement-4	IC1301 and C936 to be changed in correct combination.	No
1.8	2003.06	Correction-4	Change of parts number S.M. correction: Page 6-27	Yes
1.9	2004.07	Supplement-5	• Correction of Self-diagnosis code table • Correction of Printed wiring board • Addition of Service part • Correction of Exploded views S.M. correction: Page 9, 4-55, 6-10, 6-12	Yes